Drawing Index

These sheets are a document set and should not be separated.
Electrical information and references are contained on all sheets.

SITE READINESS C1

EQUIPMENT LAYOUT A1
(Equipment locations, heat loads, component weights, environmental specs)

STRUCTURAL LAYOUT S1
(Structural support/mounting locations for floor/wall/ceiling, wall support elevations)

STRUCTURAL DETAILS S2
(Floor and Ceiling loading information)

ELECTRICAL LAYOUT E1
(Contractor supplied wiring, interconnect methods, junction point locations and descriptions)

ELECTRICAL SPECIFICATIONS E2
(Maximum wiring run lengths, interconnect diagram, system power specifications)

ELECTRICAL DETAILS E3 THRU E4

EQUIPMENT DETAILS D1 THRU D3

These drawings indicate the placement and interconnection of the listed equipment components. These drawings are not construction or site preparation drawings. Customer remains ultimately responsible for preparing the site to accommodate the operation of such equipment in compliance with GE Healthcare's written specifications and all applicable federal, state, and/or local requirements.

* REQUIRED REFERENCE *

Optima 320/330

Pre Installation Manual

5537562–1–EN

A mandatory component of this drawing set is the GE Healthcare Pre Installation manual. Failure to reference the Pre Installation manual will result in incomplete documentation required for site design and preparation.

Pre Installation documents for GE Healthcare products can be accessed on the web at:

www.gehealthcare.com/siteplanning

GE Healthcare

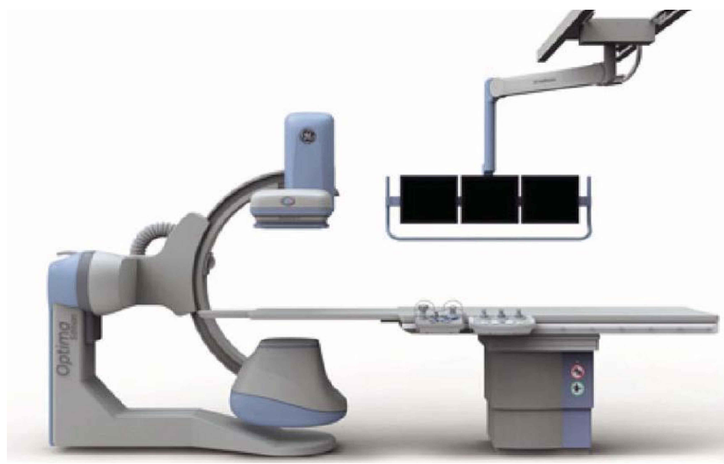

Interventional Site Planning

CUSTOMER ACCEPTANCE

imagination at work

Customer Site Readiness Requirements

- Any deviation from these drawings must be communicated in writing to and reviewed by your local GE Healthcare Installation Project Manager prior to making changes.
- Make arrangements for any rigging, special handling, or facility modifications that must be made to deliver the equipment to the installation site. If desired, your local GE Healthcare Installation Project Manager can supply a reference list of rigging contractors.
- New construction requires the following; 1. Secure area for equipment, 2. Power for drills and other test equipment, 3. Capability for image analysis, 4. Restrooms.
- Provide for refuse removal and disposal (e.g. crates, cartons, packing)
- Contact a radiation physicist or consultant to specify radiation containment requirements.

GE Equipment Delivery Requirements

The items on the GE Healthcare Site Readiness Checklist are REQUIRED to facilitate equipment delivery to the IS site. Equipment will not be delivered if these requirements are not satisfied.

GE Healthcare Site Readiness Checklist Rev 19

Before using this document ensure you have the latest Rev from MyWorkshop on DOC0422752

GEHC Global Order # : _____ Customer: _____
GEHC PMI : _____ FE / Installer: _____

The customer is responsible for proper site preparation regardless of any GEHC measurements/inspections/assessments.

Inspection Date:

	GEHC Minimum Requirements	Storage is ready?	PMI is form ready?	FE is form ready?	Comments If "N", enter comments or action plan
1	**MR Magnet Delivery Requirements:** Ensure cryogen venting system is available for magnet connection as defined by GEHC Pre-Installation Manual (PIM) requirements, exhaust fan system is installed and operational, 480V power, and chilled water supply is available 24x7 that meets system cooling requirements. External connectivity is available for magnet monitoring and phone service is available during delivery. Surface mount vibromat installed where required. Magnet room final flooring is in place.				
2	**MR RF Screen Room Requirements:** RF Screen Room is tested with copy of Test Report, emailed to ISAdminCOEMR@ge.com, that it is compliant with GEHC specifications. Dock Bolt and magnet anchors (if applicable) installed using 2 part anchor. For HDx systems, blower box mount bolts installed by RF vendor using 2 part anchors				
3	**State Regulatory Requirements:** Facility registration number provided for states of Ill, KY, HI, RI, SC, TX , X-ray shielding plan and state acknowledgment letter provided to installer for AR, DC, NC, SC, CO, & WA **Site Drawing Requirements:** Final version of equipment network and antenna, installation drawings (including red lined versions) verified to match actual room and has been provided to installer.				
4	**Surface Penetration Requirements:** Customer/Contractor scheduled to provide required drilling or cutting into floors, ceilings, and walls; OR surface penetration permit available and posted in the room when GEHC will perform the work.				
5	**Pre-Delivery Route Requirements:** The equipment delivery route from the truck to the final destination within the facility has been reviewed with all key stakeholders to safely meet the minimum requirements for equipment access, and all communications/notifications have occurred. Arrangements have been made for special handling (elevator, rigging, floor protection, fork lift, rollback truck, etc).				
6	**Finished Room Requirements:** Rooms that will contain equipment, including storage areas not in scan suite, are dust free. Provisions taken to maintain a dust free room. Precautions must be taken to prevent dust from entering rooms containing equipment when construction is incomplete in adjacent areas. All walls primed (final coat not needed on Day 1). Shielding, doors, and windows are to be installed. No contractor work being done during or after the installation that will cause dust in the installation areas or potential equipment damage. Room security to prevent unauthorized access and theft has been discussed with customer. The customer is aware of these security issues, implications and responsibility. For Storage: Room must meet PIM requirements for storage.				
7	**Electrical Requirements:** Lockable (LOTO) Main Disconnect Panel (MDP) is installed per GE guidelines and system power is available. Conduits, electrical cable ducting/dividers/cable trays, and access flooring is installed in proper location and height. Surface floor duct and load-side wires can be installed at time of system installation. Validate outlet location and requirements meet specifications for device/equipment.				
8	**HVAC Requirements:** The HVAC/Chilled Water systems designed to maintain the environment per spec/PIM is at running state and appears to provide the desired environmental conditions including location of vents, temperature and humidity for system operation.				
9	**Flooring Requirements:** Floor is clean and prepared for final floor covering. Floor levelness/flatness is measured and within tolerance, and there are no visible defects per GEHC specifications. Confirm customer anchoring plan aligns with designed floor thickness. Final flooring installed where required for network racks.				
10	**Ceiling Requirements:** Unistrut (or equivalent) location, levelness and spacing is measured (or vendor confirmed) and consistent with the requirement of the installation drawings. Ensure unistrut and rails are not used as mounting surfaces. Ceiling grid is installed. Permanent lighting is installed and operational. HVAC diffusers are installed and connected to ductwork. Ceiling tiles installed per PMI discretion.				
11	**Staging Requirements:** Space has been identified to support the active installation process only. This area meets PIM/project book requirements. Storage space has been identified, if needed. This secured space would be used to store equipment indefinitely. If offsite, transportation plan has been developed at customer expense. This space must meet PIM requirements.				
12	**Network Connectivity:** Hardwire for network connectivity(network drop) is in place prior to delivery with specified network firewall configuration where required. Site Surveys for wireless mobile XR units have been completed.				
13	**Medical Gases Requirements:** Systems (hard piped or portable) in place to allow testing and calibration of equipment (anesthesia), including ventilation.				

GE Healthcare

Healthcare Project Implementation – Design Center
Milwaukee, Wisconsin

Copyright 2009 General Electric Company – Proprietary to GE

SHEET TITLE: SITE READINESS
MODALITY TYPE: OPTIMA IGS 320–330

THIS PLAN IS SUBMITTED TO SUGGEST LOCATION OF GE HEALTHCARE EQUIPMENT ASSOCIATED WITH PROJECT. IT IS NOT TO BE USED FOR CONSTRUCTION PURPOSES. EVERY EFFORT HAS BEEN MADE IN PREPARING THIS PLAN TO CONFORM DETAILS TO ACTUAL EQUIPMENT EXPECTED TO BE INSTALLED. IT IS NOT TO BE USED FOR CONSTRUCTION PURPOSES UNLESS VERIFIED. THE COMPANY CANNOT ACCEPT RESPONSIBILITY FOR ANY DAMAGES RESULTING THEREFROM.

PROJECT TITLE:
INTERVENTIONAL RADIOLOGY – OPTIMA
TYPICAL FINAL LAYOUT

PROJECT	REVISION
4–100f	00

DATE: 20.Nov.15
DRAWN BY: SLR
CHECKED BY: TST

REVISION HISTORY:

SHEET
C1

RQ – 156428 PIM R1

GE EQUIPMENT LISTING

EQUIPMENT ON ORDER FROM GE HEALTHCARE, INSTALLED BY GE HEALTHCARE, PER : **NEITHER A QUOTE OR GON WAS ISSUED AT THE DATE OF THESE DRAWINGS**

NOTE: LOCAL CONDITIONS MAY DICTATE THAT ITEMS IDENTIFIED IN THIS CATEGORY BE INSTALLED BY OTHERS.

EQUIPMENT CROSS REFERENCE CHART
SEISMIC STATUS: P = PREAPPROVAL; C = CALCULATIONS/ PENDING APPROVAL; S = SPECIFICATIONS ONLY

QUANTITY ORDERED | REFER TO SHEET "D"

ITEM NO.	QUANTITY ORDERED	ITEM DESCRIPTION (* = EXISTING/REINSTALL)	WEIGHT	HEAT OUTPUT (PER HOUR)	DETAIL NO.	STRC PLAN	ELEC PLAN	SEISMIC STATUS
1	1	WORKSTATION CART				---		-
2	1	MAC-LAB CONSOLE, INCLUDES MONITORS AND KEYBOARD	566 lbs	2935 btu		---	PC	S
3	1	COLOR PRINTER		1054 btu		---		S
4	2	LONGITUDINAL STATIONARY RAIL FOR XT SUSPENSION	68 lbs			B20 O7B		C
5	1	FOUR LCD MONITOR SUSPENSION ON 9 ft. 6 in. XT INBOARD BRIDGE	485 lbs	1157 btu	B2004 B2010A	---	WBM1	C
6	1	AW WORKSTATION	81 lbs	1201 btu	M1013AW C7619D	-		C
7	1	COUNTERBALANCED EYE AND THYROID SHIELD WITH R96 LAMP	143 lbs		B5031E	B50 31F	LMP	S
8	1	REMOTE CONTROL FOR INJECTOR	4 lbs		B5028	.	IEC	S
9	1	INJECTOR ELECTRONICS	37 lbs	320 btu	B5028	---	IE	S
10	1	INJECTOR HEAD ON TABLE RAIL	15 lbs		B5030A	---	IH	S
11	1	INNOVA POSITIONER <REFERENCE TABLE BASE-PLATE DETAIL FOR FLOOR MOUNTING INFORMATION>	1653 lbs	2416 btu	B5050A B5050B B5050 B5050E B5050F B5050G B5050H B5050J B5050P B5050R	-	LC1	C
12	1	OMEGA V TABLE <WITH NEW COVERS>	1300 lbs	614 btu	B5061	B50 49M	LU5	C
13	1	UPS INTERFACE BOX			E4502IB	-	UIB	-
14	1	SYSTEM CONTROL CABINET	1415 lbs	5218 btu	B00015	-	SCC	C
15	1	UPS CABINET	1170 lbs	4061 btu	E4502SG	--	UPS	-
16	1	DETECTOR CHILLER	33 lbs	706 btu	B5049F	---	DC	S
17	1	CODLIX 4100 WATER CHILLER	264 lbs	11737 btu	B-IGS03 B-IGS04	-	CHLR	C
18	1	CODLIX 4100 AUTOTRANSFORMER	66 lbs	153 btu	B-IGS05	-	AT	-
19	1	CONTROL ROOM MONITOR WITH DL KEYPAD	22 lbs	204 btu	C7418H C7619D	---		S
20	1	OPERATORS CONSOLE	22 lbs	546 btu	B5050C C7508 C7619D	-	WBC1	C
21	1	BOLUS CHASE HANDSWITCH	2 lbs			---	WBBC	-
22	1	TRAM NET RACK	8 lbs		B5047	---	TRAM	S
23	1	XR BUZZER <LOCATED ABOVE CEILING>	2 lbs		B5150H	-	XRB	-

THE FOLLOWING ITEMS, WHICH HAVE BEEN ORDERED FROM GE HEALTHCARE, ARE TO BE INSTALLED BY THE CUSTOMER OR HIS CONTRACTOR.

ITEM NO.	QUANTITY ORDERED	ITEM DESCRIPTION	WEIGHT	HEAT OUTPUT	DETAIL NO.	STRC PLAN	ELEC PLAN	SEISMIC STATUS
50	1	INNOVA MAIN DISCONNECT. REFERENCE JUNCTION POINT 'PDB' ON SHEET E1 FOR DETAILED DESCRIPTION.	326 lbs	1532 btu	E4502M	-	PDB	-
51	6	VITALING SPEAKER				.		-
52	1	VITALING CONSOLE				.		-
53	1	VITALING MICROPHONE <ONE ON MONITOR BRIDGE IN EXAM ROOM>			B870K	-		-
54	1	VITALING MICROPHONE <ONE ON COUNTERTOP IN CONTROL ROOM>				-		-

SCALE: 1/4" = 1'-0" EQUIPMENT LAYOUT RECOMMENDED CEILING HEIGHT = 9'-6"

This equipment layout indicates the placement and interconnection of the indicated equipment components. There may be federal, state, and/or local requirements that could impact the placement of these components. It remains the Customer's responsibility for ensuring the site and final equipment placement complies with all applicable federal, state, and/or local requirements.

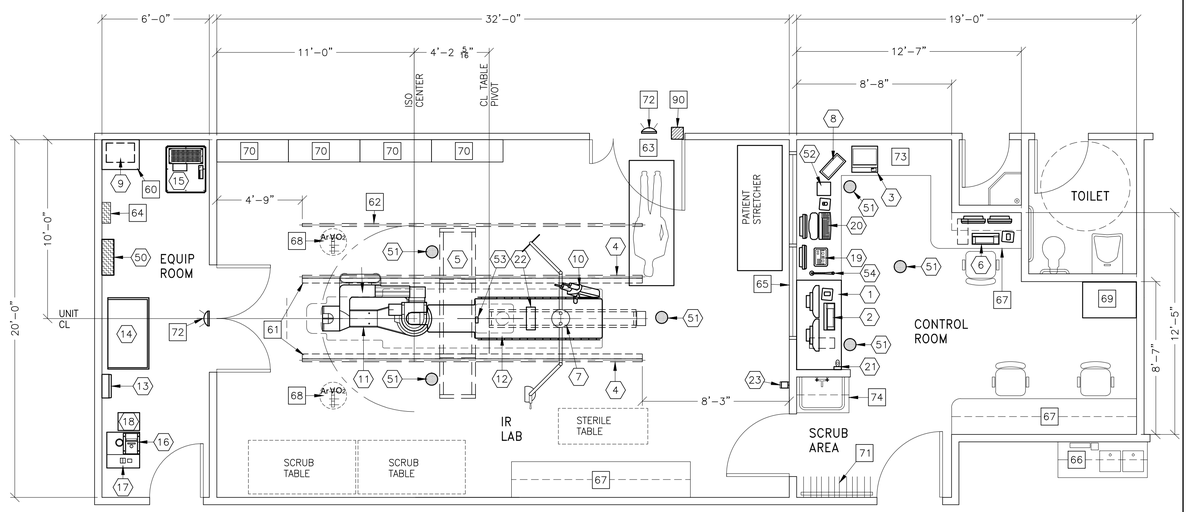

ANCILLARY ITEMS

CUSTOMER/CONTRACTOR SUPPLIED AND INSTALLED ITEMS

ITEM NO.	ITEM DESCRIPTION (* INDICATES EXISTING)
60	SHELF - CUSTOMER TO PROVIDE ADEQUATE WALL SUPPORT
61	BEARING BLOCK OUTLINE, SEE S1 FOR MORE INFORMATION.
62	CABLE DRAPE RAIL.
63	MINIMUM DOOR OPENING FOR EQUIPMENT DELIVERY IS 44 IN. W x 83 IN. H (1118mm x 2108mm). CONTINGENT ON A 96 IN. (2438mm) CORRIDOR WIDTH
64	CIRCUIT BREAKER OR EQUIVALENT WITH LOTO CAPABILITY MUST BE INSTALLED IN THE MAIN LINE TO THE PDB. THIS DEVICE MUST BE COMPATIBLE WITH THE POWER INPUT SPECIFICATIONS OF THE SYSTEM. THE CUSTOMER IS RESPONSIBLE FOR PROCUREMENT, DELIVERY, INSTALLTION OF THIS BREAKER.
65	CONTROL WALL TO CEILING WITH LEAD GLASS WINDOW
66	COUNTER TOP WITH SINK, BASE AND WALL CABINETS
67	COUNTER TOP WITH BASE AND WALL CABINETS
68	MED GASES IN CEILING
69	CUSTOMER SUPPLIED STORAGE CABINET
70	CATHETER CABINETS
71	LEAD APRON RACK
72	X-RAY ON WARNING LIGHT -- AVAILABLE FROM GE SUPPLY CALL: 800-200-9760 GE CAT. NO. WX1ABW-DF-XLU
73	COUNTER TOP FOR EQUIPMENT-SHELVING MAY BE REQUIRED PROVIDE GROMMETED OPENINGS AS REQUIRED TO ROUTE INTERCONNECT CABLES TO RACEWAY BELOW COUNTERTOP.
74	SCRUB SINK

THE FOLLOWING ITEMS ARE AVAILABLE FROM GE HEALTHCARE TECHNOLOGIES. CONTACT YOUR LOCAL GE HEALTHCARE SERVICE REPRESENTATIVE FOR PRICING AND AVAILABILITY.

ITEM NO.	ITEM DESCRIPTION
90	X-RAY ROOM WARNING LIGHT/ROOM LIGHTING CONTROL PANEL REFERENCE JUNCTION POINT 'XRLC' ON SHEET 'E1' FOR DETAILED DESCRIPTION -CAT. NO. E4502SS FOR WARNING LIGHT & ROOM LIGHT CONTROL.

GENERAL SPECIFICATIONS

- THE REQUIRED CEILING HEIGHT INDICATED ON THESE PLANS IS TO ENSURE EQUIPMENT FUNCTION IS NOT INHIBITED. CONSULT WITH YOUR LOCAL GEHC IS SPECIALIST REGARDING ACCEPTABILITY OF OTHER CEILING HEIGHTS.
- CHECK ALL DOOR OPENINGS AND HALLWAYS FROM DELIVERY LOCATION TO WHERE EQUIPMENT IS TO BE INSTALLED TO ENSURE THE ROUTE PHYSICALLY AND STRUCTURALLY WILL ACCOMODATE THE EQUIPMENT AS SHIPPED.
- RADIATION PROTECTION REQUIREMENTS ARE NOT INDICATED ON THIS PLAN. WHERE NEEDED PER NATIONAL OR LOCAL CODE THEY SHALL BE SPECIFIED BY A QUALIFIED RADIOLOGICAL PHYSICIST.
- THE DEVELOPMENT OF THE EQUIPMENT LAYOUT, ROOM DIMENSIONS, MECHANICAL AND ELECTRICAL SUGGESTIONS IS PREDICATED UPON THE BEST INFORMATION OBTAINABLE FROM THE SITE, COUPLED WITH THE CUSTOMER'S KNOWN DESIRES. ARCHITECTURAL OR ELECTRICAL CHANGES INCLUDING RELOCATION OF EQUIPMENT ILLUSTRATED ON THIS DRAWING IS ALLOWED ONLY WITH NOTIFICATION, IN WRITING, AND REVIEW BY GEHC SERVICE DEPARTMENT. EQUIPMENT OPERATION, SERVICEABILITY, AND RESTRICTING CABLE LENGTHS, ETC., MAKE THIS ESSENTIAL FOR A PROPER IS. GEHC RESERVES THE RIGHT TO MAKE ON THE JOB CHANGES BECAUSE OF CUSTOMER REQUIREMENTS AND/OR OBSTACLES IN CONSTRUCTION, ETC..
- ALL WORK TO BE IN COMPLIANCE WITH NATIONAL AND LOCAL BUILDING SAFETY CODES.
- DIMENSIONS ARE TO FINISHED SURFACES OF ROOM

SITE ENVIRONMENT SPECIFICATIONS

- AMBIENT OPERATING TEMPERATURE: EQUIPMENT ROOM WITH FLUORO UPS OPTION 68° TO 77° F, (20° TO 25° C)
- AMBIENT OPERATING TEMPERATURE: CONTROL ROOM 68° TO 77° F, (20° TO 25° C) AMBIENT OPERATING TEMPERATURE: EXAM ROOM-DESIGN FOR PATIENT/OPERATOR COMFORT TARGET TEMPERATURE 64° F (18° C)
- HUMIDITY: 30° TO 75° FOR EQUIPMENT AND CONTROL ROOMS AND 30° TO 70° FOR EXAM ROOM
- ALTITUDE: NOT TO EXCEED 9,842 FT. (3000M) ABOVE SEA LEVEL.
- THE ENVIRONMENT FOR THE ELECTRONICS CABINET MUST BE CONTROLLED SO THE ABOVE RESTRICTIONS ARE NOT EXCEEDED.
- DO NOT RESTRICT THE AIR INTAKE OR AIR EXHAUST OF THE SYSTEM COMPONENTS. ENVIRONMENTAL CONDITIONS LISTED ABOVE MUST BE MAINTAINED AT ALL TIMES INCLUDING FOR EXAMPLE OVERNIGHT, WEEKENDS, AND HOLIDAYS.
- COLD AIR RETURNS IN EQUIPMENT ROOM MUST BE LOCATED IN CLOSE PROXIMITY TO X-RAY TUBE CHILLER FOR BEST HEAT LOAD REDUCTION.

MAGNETIC INTERFERENCE SPECIFICATIONS

DIGITAL FLAT PANEL MUST BE LOCATED IN AMBIENT STATIC MAGNETIC FIELDS OF LESS THAN 1 GAUSS TO GUARANTEE SPECIFIED IMAGING PERFORMANCE.

X-RAY TUBES MUST BE LOCATED IN AMBIENT STATIC MAGNETIC FIELDS OF LESS THAN 10 GAUSS TO GUARANTEE SPECIFIED PERFORMANCE.

SYSTEM ELECTRONICS MUST BE LOCATED IN AMBIENT STATIC MAGNETIC FIELDS OF LESS THAN 10 GAUSS TO GUARANTEE DATA INTEGRITY.

OPERATORS CONSOLE EQUIPMENT MUST BE LOCATED IN AMBIENT STATIC MAGNETIC FIELDS OF LESS THAN 10 GAUSS TO OBTAIN SPECIFIED GEOMETRIC LINEARITY.

imagination at work

PIM R1

RQ - 156428

THIS SHEET IS PART OF THE DOCUMENT SET LISTED ON SHEET C1 AND SHOULD NOT BE SEPARATED

GE Healthcare

Healthcare Project Implementation – Design Center
Milwaukee, Wisconsin

SHEET TITLE: EQUIPMENT LAYOUT

MODALITY TYPE: OPTIMA IGS 320-330

THIS PLAN IS SUBMITTED TO SUGGEST LOCATION OF GE HEALTHCARE EQUIPMENT ELECTRICAL AND MECHANICAL REQUIREMENTS ARE BASED ON GENERAL GUIDELINES. IN PREPARING THIS PLAN, EVERY EFFORT HAS BEEN MADE TO CONFORM DETAILS TO ACTUAL EQUIPMENT EXPECTED TO BE INSTALLED. IT IS NOT TO BE USED FOR CONSTRUCTION PURPOSES. THE PURCHASER OR HIS REPRESENTATIVE, THE COMPANY CANNOT ACCEPT RESPONSIBILITY FOR ANY DAMAGES RESULTING THEREFROM.

PROJECT TITLE: INTERVENTIONAL RADIOLOGY – OPTIMA
TYPICAL FINAL LAYOUT

PROJECT	REVISION
4-100f	00

DATE: 20.Nov.15
DRAWN BY: SLR
CHECKED BY: TST

REVISION HISTORY:

SHEET A1

TYPICAL WALL SUPPORT ELEVATIONS

S115

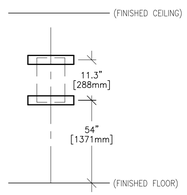

SUPPORT FOR
UPS INTERFACE BOX

(NOT TO SCALE)

S133

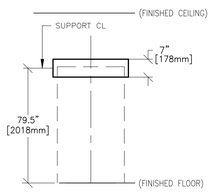

SUPPORT FOR
SYSTEMS CONTROL CABINET

(NOT TO SCALE)

S107

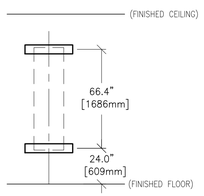

SUPPORT FOR
MAIN DISCONNECT CONTROL

(NOT TO SCALE)

STRUCTURAL LAYOUT

SCALE: 1/4" = 1'-0"

RECOMMENDED CEILING HEIGHT = 9'-6"

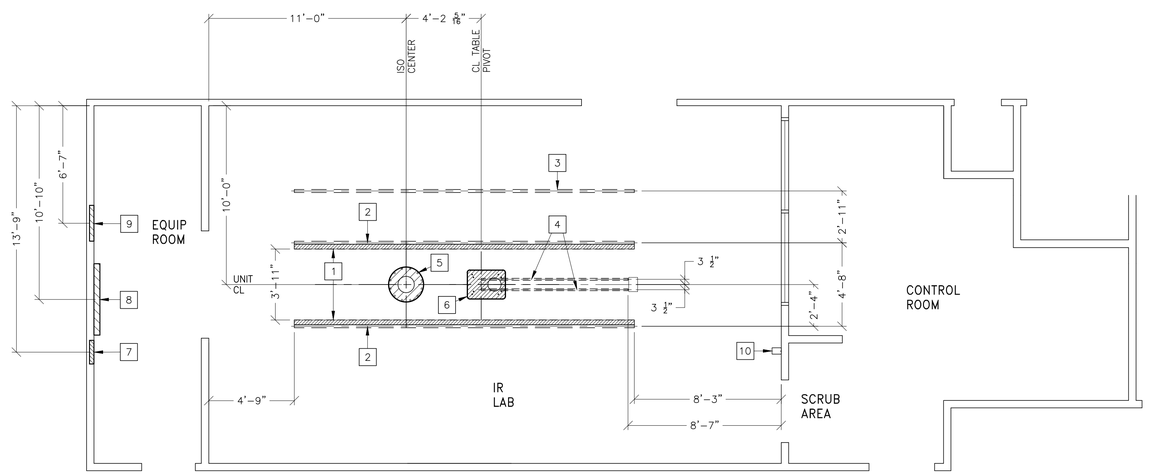

STRUCTURAL SUPPORT METHODS

CUSTOMER/CONTRACTOR SUPPLIED AND INSTALLED ITEMS

ITEM NO.	ITEM DESCRIPTION (* INDICATES EXISTING)
1	HATCHED AREA INDICATES MONITOR BRIDGE BEARING BLOCK PATH. NO CEILING MOUNTED EQUIPMENT SUCH AS SPRINKLER HEADS, LIGHTS, EXHAUST FANS ETC CAN BE PLACED IN THE HATCHED AREA.
2	UNISTRUT OR EQUIVALENT SUPPORT IN CEILING FOR FASTENING CEILING SUPPORTED EQUIPMENT. SUPPORTS TO RUN CONTINUOUS WITH NO FITTINGS EXTENDING BELOW FACE OF UNISTRUT CHANNEL. RUN WALL TO WALL, BE PARALLEL, SQUARE, AND IN THE SAME HORIZONTAL PLANE, FLUSH WITH THE FINISHED CEILING. RAILS ARE MOUNTED TO THESE SUPPORTS EVERY 2'-8" AND REQUIRE 350 LBS. (597 LBS IN SEISMIC REGIONS) PER BOLT LOAD. METHODS OF SUPPORT THAT PERMIT ATTACHMENT TO STRUCTURAL STEEL OR THROUGH BOLTS IN CONCRETE SHOULD BE FAVORED. DO NOT USE SCREW ANCHORS IN DIRECT TENSION.
3	>>COMPONENTS FLUSH WITH CEILING<< UNISTRUT OR EQUIVALENT SUPPORT IN CEILING FOR FASTENING CABLE DRAPE RAIL. SUPPORTS TO RUN CONTINUOUS WITH NO FITTINGS EXTENDING BELOW FACE OF UNISTRUT CHANNEL. RUN WALL TO WALL, BE PARALLEL, SQUARE, AND IN THE SAME HORIZONTAL PLANE, FLUSH WITH THE FINISHED CEILING. RAILS ARE MOUNTED TO THESE SUPPORTS EVERY 2'-8" AND REQUIRE 50 LBS. PER BOLT LOAD. METHODS OF SUPPORT THAT PERMIT ATTACHMENT TO STRUCTURAL STEEL OR THROUGH BOLTS IN CONCRETE SHOULD BE FAVORED. DO NOT USE SCREW ANCHORS IN DIRECT TENSION. TO ORDER CABLE DRAPE RAIL: UNISTRUT P5000 or P5500 CHANNEL AND P2751N TROLLEYS. 'CALL UNISTRUT WISCONSIN AT 262-796-8710.'
4	UNISTRUT OR EQUIVALENT SUPPORTS FOR FASTENING THE OVERHEAD COUNTERPOISED SUSPENSION. SUPPORT TO BE LOCATED AS SHOWN. SUPPORT SHOULD RUN CONTINUOUS WITH NO FITTINGS EXTENDING BELOW FACE OF UNISTRUT CHANNEL, BE PARALLEL, SQUARE, AND IN THE SAME HORIZONTAL PLANE, FLUSH WITH FINISHED CEILING. SUSPENSION REQUIRES 102 lbs/BOLT SUPPORT. METHODS OF SUPPORT THAT WILL PERMIT ATTACHMENT TO STRUCTURAL STEEL OR THROUGH BOLTS IN CONCRETE CONSTRUCTION SHOULD BE FAVORED. DO NOT USE SCREW ANCHORS IN DIRECT TENSION.
5	AREA OCCUPIED BY GE SUPPLIED POSITIONER BASEPLATE
6	AREA OCCUPIED BY GE SUPPLIED OMEGA TABLE BASE
7	SUPPORT BACKING. LOCATE AS SHOWN. REFER TO ELEVATION DETAIL S115, FOR UPS INTERFACE BOX.
8	SUPPORT BACKING. LOCATE AS SHOWN. REFER TO ELEVATION DETAIL S133 FOR SYSTEM CONTROL CABINET.
9	SUPPORT BACKING. LOCATE AS SHOWN. REFER TO ELEVATION DETAIL S107, FOR MAIN DISCONNECT CONTROL.
10	MOUNT XR BUZZER BRACKET ON WALL. ABOVE CEILING

STRUCTURAL NOTES

- ALL STEEL WORK AND PARTS NECESSARY TO SUPPORT CEILING MOUNTED TUBE HANGER OR OTHER EQUIPMENT ARE TO BE SUPPLIED BY THE CUSTOMER OR HIS CONTRACTORS. THE UNISTRUT OR EQUIVALENT STRUCTURE SHOULD RUN CONTINUOUS WITH NO FITTINGS EXTENDING BELOW FACE OF UNISTRUT CHANNEL, RUN WALL TO WALL, BE PARALLEL, SQUARE AND IN THE SAME HORIZONTAL PLANE FLUSH WITH FINISHED CEILING. THE SYSTEM IS TO BE CROSS BRACED VERTICALLY, HORIZONTALLY AND DIAGONALLY TO ALLOW NO MOVEMENT AND A MAXIMUM OF 1,58mm(1/16") DEFLECTION.
  CLOSURE STRIPS SHALL BE PROVIDED FOR AREAS OF UNISTRUT EXPOSED AND WITHOUT MOUNTING UNITS.
- METHODS OF SUPPORT FOR THE STEELWORK THAT WILL PERMIT ATTACHMENT TO STRUCTURAL STEEL OR THROUGH BOLTS IN CONCRETE CONSTRUCTION SHOULD BE FAVORED. DO NOT USE CONCRETE OR MASONRY ANCHORS IN DIRECT TENSION.
- ALL UNITS THAT ARE WALL MOUNTED OR WALL SUPPORTED ARE TO BE PROVIDED WITH SUPPORTS WHERE NECESSARY. WALL SUPPORTS ARE TO BE SUPPLIED AND INSTALLED BY THE CUSTOMER OR HIS CONTRACTORS. SEE PLAN AND DETAIL SHEETS FOR SUGGESTED LOCATIONS AND MOUNTING HOLE LOCATIONS.
- ALL CEILING MOUNTED FIXTURES, AIR VENTS, SPRINKLERS, ETC. TO BE FLUSH MOUNTED, OR SHALL NOT EXTEND MORE THAN 6,35mm (1/4") BELOW THE FINISHED CEILING.
- CONTROL WALLS WITH TUBE HANGER PASSAGE ABOVE SHALL BE CONSTRUCTED TO 2130mm (7'-0") HIGH.
- FLOOR SLABS ON WHICH EQUIPMENT IS TO BE INSTALLED MUST BE LEVEL TO 3,17mm (1/8") in 3050mm (10'-0")
- DIMENSIONS ARE TO FINISHED SURFACES OF ROOM.
- CUSTOMERS CONTRACTOR MUST PROVIDE ALL PENETRATIONS IN POST TENSION FLOORS.
- CUSTOMERS CONTRACTOR MUST PROVIDE AND INSTALL ANY NON-STANDARD ANCHORING. DOCUMENTS FOR STANDARD ANCHORING METHODS ARE INCLUDED WITH GE EQUIPMENT DRAWINGS FOR GEOGRAPHIC AREAS THAT REQUIRE SUCH DOCUMENTATION.
- CUSTOMERS CONTRACTOR MUST PROVIDE AND INSTALL HARDWARE FOR "THROUGH THE FLOOR" ANCHORING AND/OR ANY BRACING UNDER ACCESS FLOORS. THIS CONTRACTOR MUST ALSO PROVIDE FLOOR DRILLING THAT CANNOT BE COMPLETED BECAUSE OF AN OBSTRUCTION ENCOUNTERED WHILE DRILLING BY THE GE INSTALLER SUCH AS REBAR ETC.
- IT IS THE CUSTOMER'S RESPONSIBILITY TO PERFORM ANY FLOOR OR WALL PENETRATIONS THAT MAY BE REQUIRED. THE CUSTOMER IS ALSO RESPONSIBLE FOR ENSURING THAT NO SUBSURFACE UTILITIES (E.G., ELECTRICAL OR ANY OTHER FORM OF WIRING, CONDUITS, PIPING, DUCT WORK OR STRUCTURAL SUPPORTS (I.E. POST TENSION CABLES OR REBAR)) WILL INTERFERE OR COME IN CONTACT WITH SUBSURFACE PENETRATION OPERATIONS (E.G. DRILLING AND INSTALLATION OF ANCHORS/SCREWS) PERFORMED DURING THE INSTALLATION PROCESS. TO ENSURE WORKER SAFETY, GE INSTALLERS WILL PERFORM SURFACE PENETRATION OPERATIONS ONLY AFTER THE CUSTOMER'S VALIDATION AND COMPLETION OF THE "GE SURFACE PENETRATION PERMIT"

imagination at work

THIS SHEET IS PART OF THE DOCUMENT SET LISTED ON SHEET C1 AND SHOULD NOT BE SEPARATED

PIM R1

RQ - 156428

GE Healthcare

Healthcare Project Implementation – Design Center
Milwaukee, Wisconsin

SHEET TITLE: STRUCTURAL LAYOUT

MODALITY TYPE: OPTIMA IGS 320-330

THIS PLAN IS SUBMITTED TO SUGGEST LOCATION OF GE HEALTHCARE EQUIPMENT AND ASSOCIATED PANELS, DUCTS AND PIPES IN ACCORDANCE WITH GE STANDARDS. IN PREPARING THIS PLAN, EVERY EFFORT HAS BEEN MADE TO CONFORM DETAILS TO ACTUAL EQUIPMENT EXPECTED TO BE INSTALLED. IT IS NOT TO BE USED FOR ACTUAL CONSTRUCTION PURPOSES UNTIL THE COMPANY CANNOT ACCEPT RESPONSIBILITY FOR ANY DAMAGES RESULTING THEREFROM.

PROJECT TITLE:
INTERVENTIONAL RADIOLOGY – OPTIMA
TYPICAL FINAL LAYOUT

PROJECT	REVISION
4-100f	00

DATE: 20.Nov.15
DRAWN BY: SLR
CHECKED BY: TST

REVISION HISTORY:

SHEET
S1

SUPPORT DETAIL
XT RADIOGRAPHIC SUSPENSION, INBOARD MOUNTING

B20–078
REV. DATE: 11.Jun.12

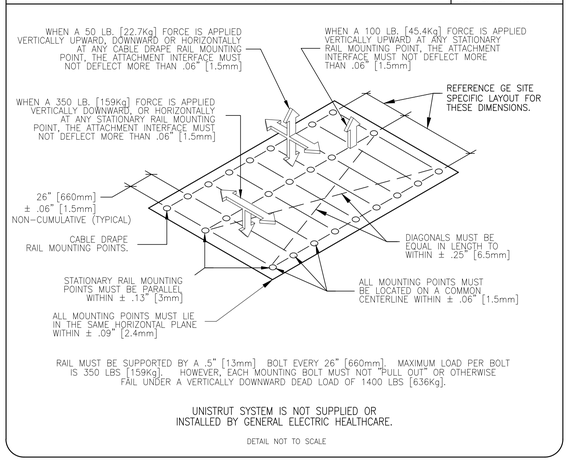

RAIL MUST BE SUPPORTED BY A .5" [13mm] BOLT EVERY 26" [660mm]. MAXIMUM LOAD PER BOLT IS 350 LBS [159Kg]. HOWEVER, EACH MOUNTING BOLT MUST NOT "PULL OUT" OR OTHERWISE FAIL UNDER A VERTICALLY DOWNWARD DEAD LOAD OF 1400 LBS [636Kg].

UNISTRUT SYSTEM IS NOT SUPPLIED OR INSTALLED BY GENERAL ELECTRIC HEALTHCARE.

DETAIL NOT TO SCALE

SUPPORT DETAIL
XT RADIOGRAPHIC SUSPENSION, INBOARD MOUNTING

B20–042
REV. DATE: 11.Jun.12

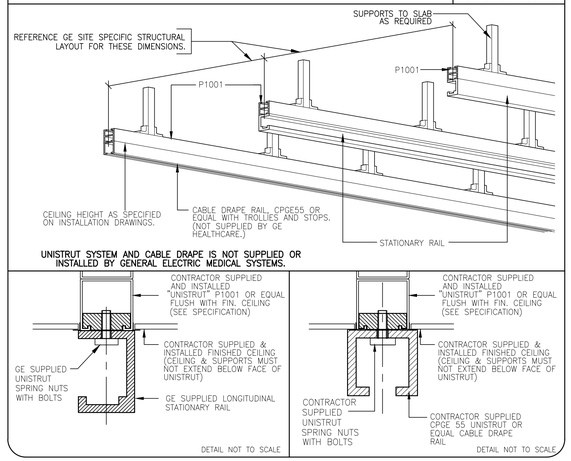

UNISTRUT SYSTEM AND CABLE DRAPE IS NOT SUPPLIED OR INSTALLED BY GENERAL ELECTRIC MEDICAL SYSTEMS.

DETAIL NOT TO SCALE

DETAIL NOT TO SCALE

SUPPORT DETAIL
MAVIG CEILING TRACK MOUNTING

B50–31F
REV. 00: 05/09/05

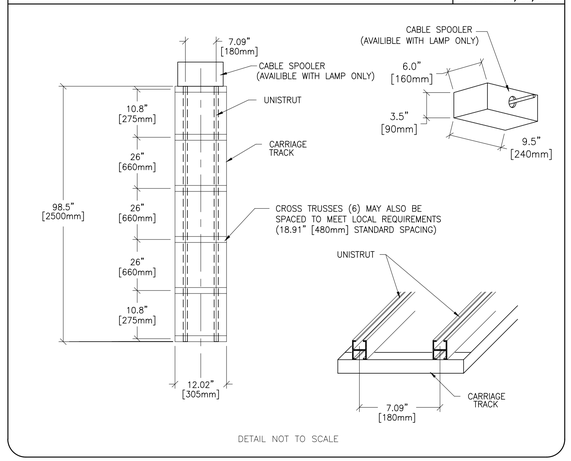

DETAIL NOT TO SCALE

FLOOR MOUNTING : ALL INNOVA (UNITY AND HARMONY) SYSTEMS/OMEGA V LONG TABLE (NO IQ TILT TABLE BASEPLATE) INSTALLATION (TEMPLATE NO. 2127792)

B5049M
REV. DATE: 12.May.15

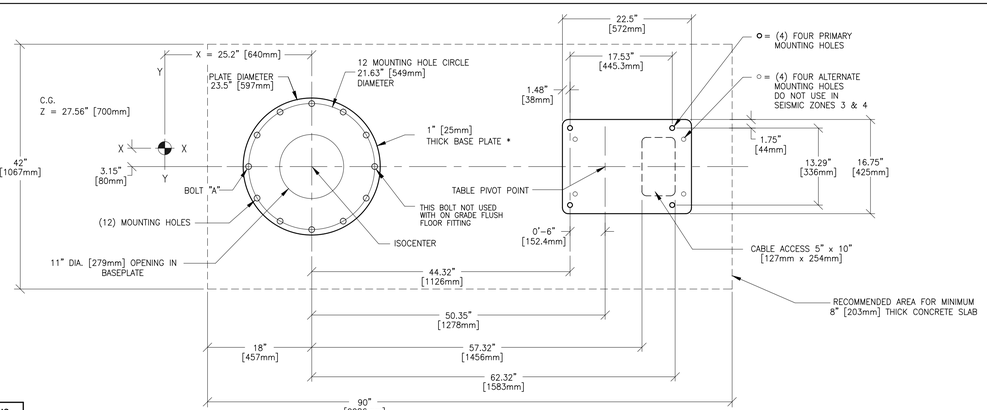

* FURNISHED BY GEHC AS PART OF INSTALLATION KIT

POSITIONER BASEPLATE — DETAIL NOT TO SCALE — TABLE BASE

WARNING!! THE RELATIONSHIP BETWEEN THE TABLE BASE AND THE POSITIONER BASEPLATE IS CRITICAL.

PRIOR TO DRILLING MOUNTING HOLES CONTACT LOCAL GE HEALTHCARE INSTALLATION PROJECT MANAGER OR LEAD FIELD ENGINEER TO VERIFY THAT THE PROPER FULL SIZE FLOOR MOUNTING TEMPLATE IS USED.

THROUGH–BOLT MOUNTING OPTIONS

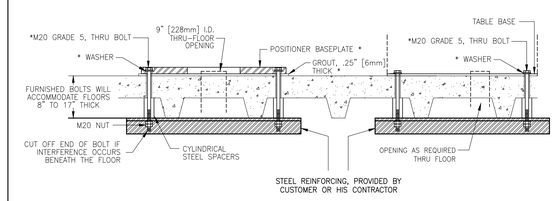

PAN CONSTRUCTION

* FURNISHED BY GEHC AS PART OF INSTALLATION KIT

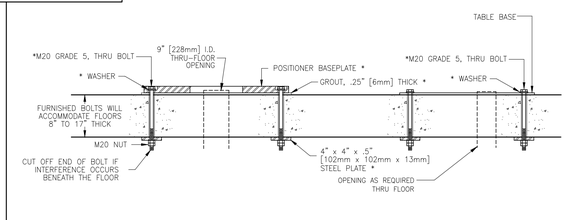

SLAB CONSTRUCTION

* FURNISHED BY GEHC AS PART OF INSTALLATION KIT

ANCHOR BOLT MOUNTING OPTIONS

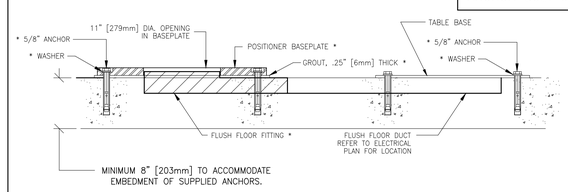

ON GRADE CONSTRUCTION

* FURNISHED BY GEHC AS PART OF INSTALLATION KIT

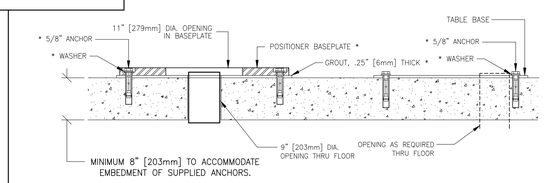

ABOVE GRADE CONSTRUCTION

* FURNISHED BY GEHC AS PART OF INSTALLATION KIT

Customer/Contractor Alert: It is the responsibility of the Customer or their Contractor to drill all anchor/thru–bolting holes for anchoring the positioner and table to the floor. Refer to GEHC document no. *2290880–2–100 for installation preparation and procedures.

NOTE: THRU BOLTING IS HIGHLY PREFERRED FOR THE INSTALLATION OF THE POSITIONER BASEPLATE AND OMEGA TABLE.
HARDENED BOLTS AND 4" x 4" [102mm x 102mm] STEEL PLATES TO BE USED ARE SUPPLIED BY GE HEALTHCARE AS THAT ADDITIONAL SUPPORT STRUCTURES: STEEL IE SUPPLIED AND INSTALLED BY THE CUSTOMER

USED IF APPROVED BY CUSTOMERS STRUC– NO. **2286398** SHOULD BE ORDERED. TRUCTURAL ENGINEER.

NOTE: JOISTS MUST BE SPANNED WITH STEEL REINFORCING. SIZE AND THICKNESS OF STEEL REINFORCING ARE DETERMINED BY THE ACTUAL PAN CONSTRUCTION ON SITE. STEEL PLATES, CHANNELS OR BEAMS MAY BE USED.

NOTE: DETERMINE THE POSITION OF THE "REBARS IN THE CONCRETE FLOOR SO ANCHOR HOLES WILL NOT RUN INTO THEM.

* DOCUMENT FURNISHED BY GEHC AS PART OF INSTALLATION KIT

MEDICAL GAS FLOOR EXIT LOCATIONS

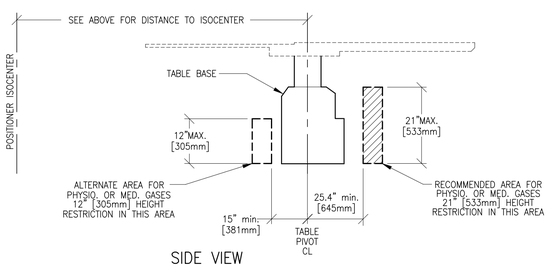

SIDE VIEW

DETAIL NOT TO SCALE

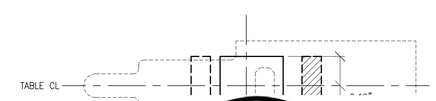

imagination at work

ORST CASE CONDITIONS

BOLT TENSION (AT BOLT "A")
MAXIMUM TENSION = 881 lbs. [400 Kg]

BOLT SHEAR (U–ARM LOCKED)
MAXIMUM SHEAR = 120 lbs. [54 Kg]/BOLT

OMEGA TABLE BOLT FORCES FOR WORST CASE CONDITIONS

LOADS

BOLT TENSION
MAXIMUM TENSION = 1938 lbs. [880 Kg]/BOLT

BOLT SHEAR
MAXIMUM SHEAR = 407 lbs. [185 Kg]/BOLT

THIS SHEET IS PART OF THE DOCUMENT SET LISTED ON SHEET C1 AND SHOULD NOT BE SEPARATED

PIM R1

RQ – 156428

GE Healthcare
Healthcare Project Implementation – Design Center
Milwaukee, Wisconsin

SHEET TITLE: STRUCTURAL DETAILS
MODALITY TYPE: OPTIMA IGS 320–330

THIS PLAN IS SUBMITTED TO SUGGEST LOCATION OF GE HEALTHCARE EQUIPMENT. THE LAYOUT WAS BASED ON INFORMATION PROVIDED BY THE CUSTOMER OR THEIR AGENTS. IN PREPARING THIS PLAN, EVERY EFFORT HAS BEEN MADE TO CONFORM DETAILS TO ACTUAL EQUIPMENT EXPECTED TO BE INSTALLED. IT IS NOT TO BE USED FOR CONSTRUCTION PURPOSES. THE GE HEALTHCARE COMPANY CANNOT ACCEPT RESPONSIBILITY FOR ANY DAMAGES RESULTING THEREFROM.

PROJECT TITLE:
INTERVENTIONAL RADIOLOGY – OPTIMA
TYPICAL FINAL LAYOUT

PROJECT	REVISION
4–100f	00

DATE: 20.Nov.15
DRAWN BY: SLR
CHECKED BY: TST

REVISION HISTORY:

SHEET
S2

SCALE: 1/4" = 1'-0"

ELECTRICAL PLAN

RECOMMENDED CEILING HEIGHT = 9'-6"

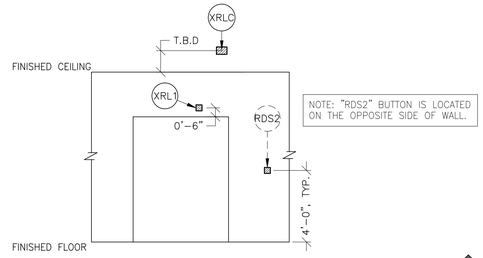

NOTE: "RDS2" BUTTON IS LOCATED ON THE OPPOSITE SIDE OF WALL.

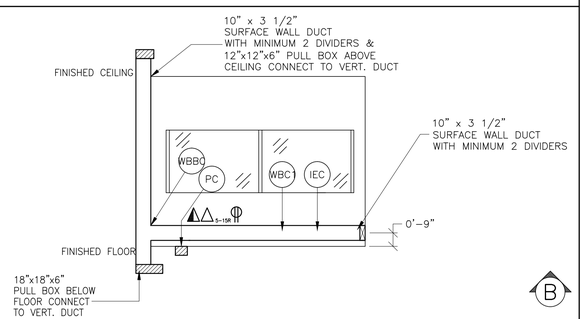

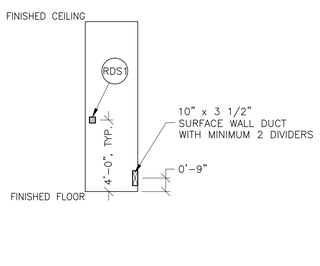

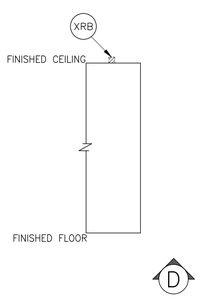

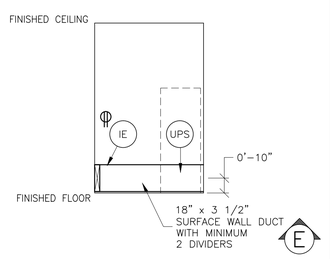

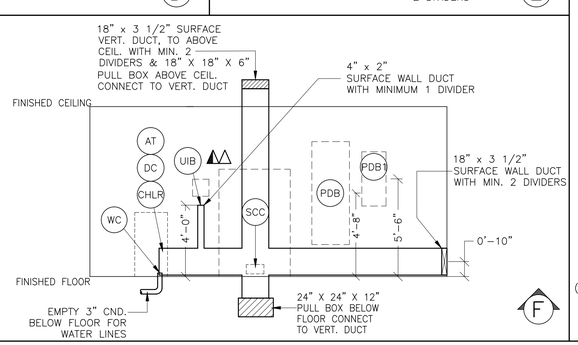

ELECTRICAL OUTLET LEGEND

CUSTOMER/CONTRACTOR SUPPLIED AND INSTALLED ITEMS. HEIGHT ABOVE FLOOR DETERMINED BY LOCAL CODES UNLESS OTHERWISE SPECIFIED.

- DUPLEX HOSPITAL GRADE, DEDICATED WALL OUTLET 120-V, SINGLE PHASE POWER
- DEDICATED TELEPHONE LINE(S) (SEE ELECTRICAL DETAIL ELEC-1 OR ELEC-67)
- NETWORK OUTLET (SEE ELECTRICAL DETAILS ELEC-83 AND ELEC-84 OR ELEC-87)
- DUPLEX HOSPITAL GRADE, DEDICATED OUTLET 120-V EMERGENCY, SINGLE PHASE POWER, 15A
- 5-15R — 5-15R NEMA RECEPTACLE, DEDICATED OUTLET 120-V, SINGLE PHASE POWER
- 115-V 6-GANG — 6-GANG HOSPITAL GRADE, DEDICATED WALL OUTLET 115-V, SINGLE PHASE POWER

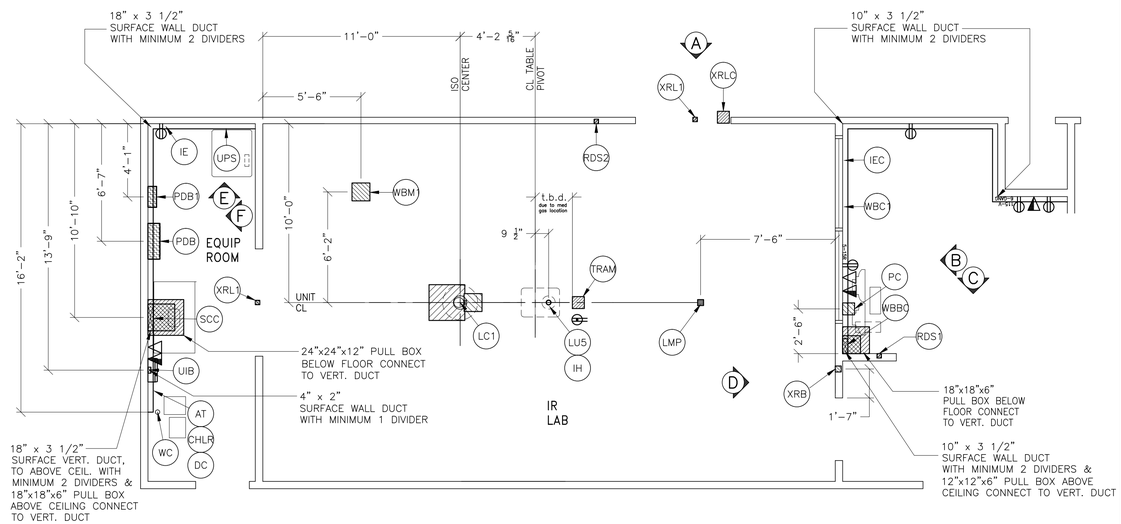

A COMPLETE REVIEW OF ELECTRICAL OPTIONS MUST BE DISCUSSED WITH YOUR GE PROJECT MANAGER OF INSTALLATIONS, BEFORE BIDDING BEGINS.

CONDUIT RUNS: INNOVA OPTIMA 320/330

CONDUITS REQUIRED FOR BASE SYSTEM (CONDUITS ARE LOCATED BELOW FLOOR)

REV DATE: 10/01/08

(1)	LC1	TO	SCC	FOUR 4" CNDS. **USABLE CABLE LENGTH UP TO 60 FT.**
(2)	LC1	TO	LU5	ONE 4" & ONE 2" CND. **CABLE LENGTH 13 FT.**
(57)	LU5	TO	SCC	ONE 4" & ONE 2" CND. **(ONLY FOR STATES WITH ACHA INSPECTION)**
(3)	WBC1	TO	SCC	ONE 3 1/2" & TWO 2 1/2" CNDS. **USABLE CABLE LENGTH UP TO 60 FT.**

NOTE: SEE E2 PAGE FOR MAXIMUM RUN LENGTHS

CONDUITS REQUIRED FROM POINT "XRLC" (CONDUITS ARE LOCATED ABOVE CEILING)

REV DATE: 10/01/08

(4)	XRLC	TO	XRL1	ONE 1/2" CND.
(6)	XRLC	TO	SCC	ONE 1/2" CND.
(7)	XRLC	TO	120-V 1Ø POWER	CND. AS REQ'D

NOTE: SEE E2 PAGE FOR MAXIMUM RUN LENGTHS

CONDUITS REQUIRED FROM POINT "WBBC" (CONDUITS ARE LOCATED BELOW FLOOR)

REV DATE: 10/01/08

(8)	WBBC	TO	LU5	ONE 2 1/2" CND. **CABLE LENGTH 88 FT.**

NOTE: SEE E2 PAGE FOR MAXIMUM RUN LENGTHS

CONDUITS REQUIRED FROM POINT (CONDUITS ARE LOCATED ABOVE

(9)	XRB	TO	SCC	ONE 3/4"

NOTE: SEE E2 PAGE FOR MAXIMUM RUN L

CONDUITS REQUIRED FROM POINT (CONDUITS ARE LOCATED ABOVE

(11)	LMP	TO	120-V 1Ø POWER	CND. AS R

NOTE: SEE E2 PAGE FOR MAXIMUM RUN L

CONDUITS REQUIRED FROM POINT "WBM1" (CONDUITS ARE LOCATED ABOVE CEILING)

REV DATE: 04/06/09

(12)	WBM1	TO	SCC	TWO 2 1/2" CNDS. AND ONE 3 1/2" CND. **USABLE CABLE LENGTH UP TO 40 FT.**
(13)	WBM1	TO	WBC1	ONE 2 1/2" CND. **USABLE CABLE LENGTH 40 FT.**

NOTE: SEE E2 PAGE FOR MAXIMUM RUN LENGTHS

CONDUITS REQUIRED FROM POINT "WC" (CONDUIT IS LOCATED IN OR BELOW FLOOR)

REV DATE: 04/06/09

(14)	WC	TO	LC1	ONE EMPTY 3" CND. **(FOR WATER LINES)** **(ABOVE GROUND: RUN TO 12x12x6" BOX AT LC1) (ON GROUND: RUN TO KEYHOLE FITTING AT LC1) USABLE CABLE LENGTH UP TO 60 FT**

NOTE: SEE E2 PAGE FOR MAXIMUM RUN LENGTHS

CONDUITS REQUIRED FROM POINT "PDB" (CONDUITS ARE LOCATED ABOVE CEILING

REV DATE: 04/06/09

(15)	PDB	TO	UPS	TWO CNDS. AS REQ'D.
(16)	PDB	TO	UIB	ONE 1 1/2" CND. **USABLE CABLE LENGTH 70 FT.**
(17)	PDB	TO	RDS1	ONE 1/2" CND.
(18)	PDB	TO	RDS2	ONE 1/2" CND.
(19)	PDB	TO	SCC	TWO 2 1/2" CNDS. FOR FOUR CUSTOMER SUPPLIED POWER/ GROUND RUNS (AND GE SUPPLIED WIRES) **CABLE LENGTH 19 FT.**
(20)	PDB	TO	SCC	ONE 1" CND. FOR TWO GE SUPPLIED SIGNAL CABLES **CABLE LENGTH 19 FT.**
(21)	PDB	TO	PDB1	ONE CND. AS REQ'D.

CONTACT YOUR LOCAL CARDIO VASCULAR PROJECT MANAGER, INSTALLATIONS (CVPM) FOR ANY MODIFICATIONS TO ROOM LAYOUT.

BEFORE PROCEDING WITH INSTALLATION OF CEILING MOUNTED FIXTURES, PLEASE REFER TO STRUCTURAL SHEET S1 FOR LOCATIONS OF UNISTRUT AND OTHER STRUCTURAL SUPPORTED EQUIPMENT IN CEILING.

NOTE:
SUGGESTION THAT COLOR CODED PHASE CABLING BE USED EITHER BY COLORED WIRES OR COLORED TAPE.

JUNCTION POINT NOTES

- ALL JUNCTION BOXES, CONDUIT, DUCT, DUCT DIVIDERS, SWITCHES, CIRCUIT BREAKERS, CABLE TRAY, ETC., ARE TO BE SUPPLIED AND INSTALLED BY CUSTOMERS ELECTRICAL CONTRACTOR.
- CONDUIT AND DUCT RUNS SHALL HAVE SWEEP RADIUS BENDS
- CONDUITS AND DUCT ABOVE CEILING OR BELOW FINISHED FLOOR MUST BE INSTALLED AS NEAR TO CEILING OR FLOOR AS POSSIBLE TO REDUCE RUN LENGTH.
- CEILING MOUNTED JUNCTION BOXES ILLUSTRATED ON THIS PLAN MUST BE INSTALLED FLUSH WITH FINISHED CEILING.
- ALL DUCTWORK MUST MEET THE FOLLOWING REQUIREMENTS:
  1. DUCTWORK SHALL BE METAL WITH DIVIDERS AND HAVE REMOVABLE, ACCESSIBLE COVERS.
  2. DUCTWORK SHALL BE CERTIFIED/RATED FOR ELECTRICAL POWER PURPOSES.
  3. DUCTWORK SHALL BE ELECTRICALLY AND MECHANICALLY BONDED TOGETHER IN AN APPROVED MANNER.
  4. PVC AS A SUBSTITUTE MUST BE USED IN ACCORDANCE WITH ALL LOCAL AND NATIONAL CODES.
- ALL OPENINGS IN ACCESS FLOORING ARE TO BE CUT OUT AND FINISHED OFF WITH GROMMET MATERIAL BY THE CUSTOMERS CONTRACTOR.
- GENERAL CONTRACTOR TO INSERT PULL CORDS FOR ALL CABLE RUN CONDUITS BETWEEN THE EQUIPMENT ROOM AND THE OPERATORS CONTROL ROOM.
- 10 FOOT PIGTAILS AT ALL JUNCTION POINTS.
- ALL WIRING MUST BE THHN OR TFN STRANDED COPPER THERMOPLASTIC 600 VOLT OR EQUIVALENT INSULATION. **ALUMINUM OR SOLID WIRES ARE NOT ALLOWED.**
- GROUNDING IS CRITICAL TO EQUIPMENT FUNCTION AND PATIENT SAFETY. SITE MUST CONFORM TO WIRING SPECIFICATIONS SHOWN ON THIS PLAN.

FEEDER TABLE

REV. DATE: 12/22/10

- CALCULATIONS BASED UPON NOMINAL VOLTAGE, WIRE SIZE IN AWG.
- RECOMMENDED FEEDER SIZES FROM DIST. TRANS. TO ROOM DISCONNECT. CALCULATIONS ARE AT NOMINAL VOLTAGE BASED UPON 1/0 WIRE SIZE FROM ROOM DISCONNECT TO POWER CABINET WITH A MAXIMUM RUN OF 25 FT.
- NEUTRAL MUST BE TERMINATED INSIDE THE MAIN DISCONNECT PANEL AND NOT AT ANY GE CABINET.
- THE GROUNDING CONDUCTOR ( ) WILL BE A 2 AWG MINIMUM, OR MEET LOCAL CODE REQUIREMENTS, WHICHEVER IS LARGER.
  THIS GROUND WILL RUN FROM THE EQUIPMENT BACK TO THE POWER SOURCE/MAIN GROUNDING POINT AND ALWAYS TRAVEL IN THE SAME CONDUIT WITH THE FEEDERS AND NEUTRAL.
- * MINIMUM WIRE SIZE FOR CIRCUIT BREAKER, BASED ON RECOMMENDED OVERCURRENT PROTECTION.
- FOR A FULL SYSTEM UPS, REFER TO ELECTRICAL DETAILS FOR UPS FEEDER WIRES.
- IF THE FEEDER IS BIGGER THAN 3/0, THE HOSPITAL MUST PROVIDE AND INSTALL A REDUCTION BOX

RUN LENGTH IN FEET	POWER SUPPLY VOLTAGE								
	324-396 360	342-418 380	360-440 400	378-462 420	396-484 440	414-506 460		432-528 480	
						DER	GROUND	FEEDER	GROUND
						/0	(2)	*1/0	(2)
						/0	(2)	*1/0	(2)
						/0	(2)	*1/0	(2)
						/0	(2)	1/0	(2)
						/0	(2)	3/0	(2)
						/0	(2)	4/0	(2)
						OM	(2)	4/0	(2)
						OM	(2)	300M	(2)

JUNCTION POINT DESCRIPTIONS

POINT	DESCRIPTION	QTY.	HARDWARE	DETAIL NO., SHT. E3
			THE FOLLOWING MATERIALS ARE TO BE SUPPLIED AND INSTALLED BY THE CUSTOMER'S ELECTRICAL CONTRACTOR	
AT	COOLIX 4100 AUTOTRANSFORMER	1	EXTERNALLY CONNECTED TO 'CHLR' (WATER CHILLER)	
CHLR	COOLIX 4100 WATER CHILLER	1	12 IN. OF GROMMET MATERIAL FOR A 3 X 3 IN. OPENING IN DUCT COVER	ELEC-5 ELEC-6
DC	DETECTOR CHILLER	1	12 IN. OF GROMMET MATERIAL FOR A 3 X 3 IN. OPENING IN DUCT COVER	ELEC-5 ELEC-6
IE	INJECTOR ELECTRONICS	1	12 IN. OF GROMMET MATERIAL FOR A 3 X 3 IN. OPENING IN DUCT COVER	ELEC-5 ELEC-6
IEC	INJECTOR CONTROL	1	12 IN. OF GROMMET MATERIAL FOR A 3 X 3 IN. OPENING IN DUCT COVER	ELEC-5 ELEC-6
IH	INJECTOR HEAD	1	EXTERNALLY CONNECTED AT TABLE BASE	
LC1	INNOVA LC	1 1 2 4 1 1 1 4	24 X 24 X 12 IN. BOX SUITABLE LENGTH OF 6 IN. DIA. THREADED CONDUIT OR PIPE 6 IN. DIA. LOCKNUTS 1 IN. DIA. LOCKNUT GE SUPPLIED FITTING 12 X 12 X 6 IN. BOX 6 IN. DIA. BUSHING 1 IN. DIA. BUSHING	ELEC-100 ELEC-177
LMP	SURGICAL LAMP	1 1 1	COVERPLATE 4 X 4 X 4 IN. BOX 1/2 IN. DIA. CHASE NIPPLE	ELEC-8
LU5	OMEGA TABLE	1 1 2	COVERPLATE 12 X 12 X 6 IN. BOX 4 IN. DIA. BUSHING & LOCKNUT	ELEC-9 ELEC-48
PC	MAC LAB	1 1 1 2	COVERPLATE 12 IN. OF GROMMET MATERIAL FOR A 3 X 3 IN. OPENING IN DUCT COVER 8 X 8 X 6 IN. BOX 3 IN. DIA. CHASE NIPPLE	ELEC-13 ELEC-6 ELEC-2
PDB	MAIN DISCONNECT	1	150-AMP PANEL INCLUDED IN ORDER	ELEC-161
PDB1	LOCAL SERVICE DISCONNECT	1	150-AMP LOCAL SERVICE DISCONNECT (CUSTOMER SUPPLIED)	
RDS1	EMERGENCY OFF	1	PROVIDE A SINGLE GANG, 2 1/8 IN. DEEP, FLUSH MTD. WALL BOX.	ELEC-16
RDS2	EMERGENCY OFF	1	PROVIDE A SINGLE GANG, 2 1/8 IN. DEEP, FLUSH MTD. WALL BOX.	ELEC-16
SCC	SYSTEM CONTROL CABINET	1 1	32 IN. OF GROMMET MATERIAL FOR AN 8 X 8 IN. OPENING IN DUCT COVER	ELEC-5 ELEC-6 ELEC-8
TRAM	REMOTE ACQUISITION UNIT	1 1 2	COVERPLATE 8 X 8 X 6 IN. FLOOR BOX 3 IN. DIA. CHASE NIPPLE	ELEC-13
UIB	UPS INTERFACE BOX	1	12 IN. OF GROMMET MATERIAL FOR A 3 X 3 IN. OPENING IN DUCT COVER	ELEC-5 ELEC-6
UPS	UPS CABINET	1 1	32 IN. OF GROMMET MATERIAL FOR AN 8 X 8 IN. OPENING IN DUCT COVER 6 FT OF 2 IN. FLEX CONDUIT AND CONNECTORS	ELEC-5 ELEC-6
WBBC	BOLUS WALLBOX	1	12 IN. OF GROMMET MATERIAL FOR A 3 X 3 IN. OPENING IN DUCT COVER	ELEC-5 ELEC-6
WBC1	OPERATORS CONSOLE	1	12 IN. OF GROMMET MATERIAL FOR A 3 X 3 IN. OPENING IN DUCT COVER	ELEC-5 ELEC-6
WBM1	TV MONITOR	1 2 1	COVERPLATE 2 1/2 IN. DIA. CHASE NIPPLE 18 X 18 X 6 IN. FLUSH CEILING BOX	ELEC-8
WC	WATER CHILLER HOSE OUTLET	1	3 IN. CONDUIT STUBBED 2 IN. ABOVE FLOOR	ELEC-9
XRB	XR BUZZER (LOCATED ABOVE CEILING)	1	SINGLE GANG BOX	ELEC-8
XRL1	WARNING LIGHT	1 1 1 1	COVERPLATE SINGLE GANG BOX 'X-RAY ON' INCANDESCENT LIGHT FIXTURE - DO NOT USE FLUORESCENT FIXTURES.	ELEC-157
XRLC	WARNING LIGHT CONTROLLER *AVAILABLE FROM GEHC, CALL 800-879-7925 OR LOCAL GE INSTALLATION PROJECT MGR.	1	E45028S WARNING LIGHT & ROOM LIGHT CONTROL OR EQUIVALENT MAX 24V CONTROLLER	ELEC-157

CONTRACTOR SUPPLIED AND INSTALLED WIRING

ELECTRICAL CONTRACTOR SHALL RING OUT, TAG AND TERMINATE ALL WIRES AT BOTH ENDS.

WIRE RUN, FROM - TO	QUANTITY, WIRE SIZE/COLOR
(22) 3 PHASE > PDB1	3-BLACK, 1-WHITE, 1-GREEN (REFER TO FEEDER TABLE)
(21) PDB1 > PDB	3-BLACK, 1-WHITE, 1-GREEN (REFER TO FEEDER TABLE)
(19) PDB > SCC (JEDI)	3-1/0 BLACK, 1-1/0 GREEN
(19) PDB > SCC (PDU)	2-NO. 10 BLACK, 1-NO. 10 GREEN
(19) PDB > SCC	3-NO. 8 BLACK, 1-NO. 8 GREEN
(19) PDB > AT	3-NO. 10 BLACK, 1-NO. 10 GREEN
(15) PDB > UPS	6-NO. 6 BLACK, 1-NO. 6 WHITE, 2-NO. 6 GREEN
(17) PDB > RDS1	2-NO. 14 BLACK, 2-NO. 14 WHITE, 1-NO. 14 GREEN
(18) PDB > RDS2	2-NO. 14 BLACK, 2-NO. 14 WHITE, 1-NO. 14 GREEN
(7) XRLC > 1 PHASE	1-NO. 14 BLACK, 1-NO. 14 WHITE, 1-NO. 14 GREEN
(6) XRLC > SCC	2-NO. 14 BLACK, 2-NO. 14 WHITE, 1-NO. 14 GREEN
(4) XRL1 > XRLC	1-NO. 14 BLACK, 1-NO. 14 WHITE, 1-NO. 14 GREEN
(11) 120-V > LMP	1-BLACK, 1-WHITE, 1-GREEN - (SIZE AS REQUIRED)

imagination at work

GE Healthcare

Healthcare Project Implementation – Design Center
Milwaukee, Wisconsin

SHEET TITLE: ELECTRICAL LAYOUT

MODALITY TYPE: OPTIMA IGS 320-330

THIS PLAN IS SUBMITTED TO SUGGEST LOCATION OF GE HEALTHCARE EQUIPMENT ASSOCIATED WITH THE PROJECT DETAILED ON THE DRAWINGS. ALTHOUGH, EFFORTS WERE MADE IN PREPARING THIS PLAN, EVERY EFFORT HAS BEEN MADE TO CONFORM DETAILS TO ACTUAL EQUIPMENT EXPECTED TO BE INSTALLED. IT IS NOT TO BE USED FOR CONSTRUCTION PURPOSES. THE PURCHASING HOSPITAL OR COMPANY CANNOT ACCEPT RESPONSIBILITY FOR ANY DAMAGES RESULTING THEREFROM.

PROJECT TITLE: INTERVENTIONAL RADIOLOGY – OPTIMA
TYPICAL FINAL LAYOUT

PROJECT	REVISION
4-100f	00

DATE: 20.Nov.15
DRAWN BY: SLR
CHECKED BY: TST

REVISION HISTORY:

SHEET
E1

PIM R1

RQ - 156428

INTERCONNECT DIAGRAM

TYPICAL VIEWS

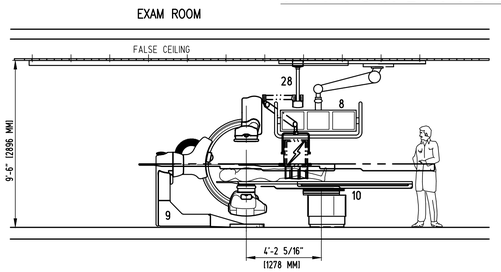

EQUIPMENT DESCRIPTIONS

ITEM	DESCRIPTION	WEIGHT (lb)	HEAT DISSIPATION (btu)	DRAWING DESIGNATOR
1	– XR BUZZER	2		XRB
2	– NUMBER NOT USED			
3	– SYSTEM CONTROL CABINET SCC	1414	5217	SCC
4	– DETECTOR CONDITIONER	33	706	DC
5	– COOLIX 4100 WATER CHILLER	449	18716	CHLR
6	– 20kva UPS CABINET	1170	4061	UPS
7	– UPS INTERFACE BOX			UIB
8	– ERGO LCD MONITOR SUSPENSION	207	614	WBM1
9	– INNOVA LC POSITIONER	1653	2416	LC1
10	– OMEGA V LONG TABLE	1750	614	LU5
11	– INNOVA VCIM HITH DL KEYBOARD CONSOLE	22	204	––
12	– VCIM OPERATOR CONSOLE	22	546	WBC1
13	– ROOM LIGHTS			RML1
14	– XRAY WARNING LAMP			XRL1
15	– XRAY WARNING LAMP CONTROLLER			XRLC
16	– RDS1 PUSHBUTTON			RDS1
17	– RDS2 PUSHBUTTON			RDS2
18	– PDB MAIN DISCONNECT	326	1532	PDB
19	– LOTO DISCONNECT BREAKER			PDB1
20	– COOLIX 4100 AUTOTRANSFORMER	99	239	AT

OPTIONS

ITEM	DESCRIPTION	WEIGHT (lb)	HEAT DISSIPATION (btu)	DRAWING DESIGNATOR
21	– BOLUS CHASE HANDSWITCH	2		WBBC
22	– ADVANTAGE WINDOWS WORKSTATION	81	1201	AW
23	– IVUS VOLCANO CONSOLE	68	1631	IVUS
24	– IVUS VOLCANO COLOR PRINTER	X	X	––
25	– INJECTOR HEAD	15		IH
26	– INJECTOR ELECTRONICS	37	320	IE
27	– REMOTE CONTROL FOR INJECTOR	4		IEC
28	– LAMP (RADIATION SHIELD TRACK)	143		LMP
29	– CARROT MONITOR PROCESSOR	145	6143	PROC
30	– CARROT LCD MONITOR	546	1706	CART
31	– MACH 3 TRANSFORMER	70	X	M3T
32	– MACLAB PHYSIO. MONITORING	566	2935	PC
33	– PRINTER (PHYSIO.)	X	309	––
34	– TRAM (PHYSIO.)	8	X	TRAM
35	– REMOTE OPERATING TERMINAL (PHYSIO.)	46	682	RMOT
36	– MICRO PACE (PHYSIO.)	X	X	MP
37	– SKYTRON LIGHTING UNIT	50	341	SL
38	– 150 KVA UPS	2160	31802	UPS
39	– UPS BATTERY CABINET	3529	X	––
40	– MAINTENANCE BYPASS PANEL	350	X	MBP

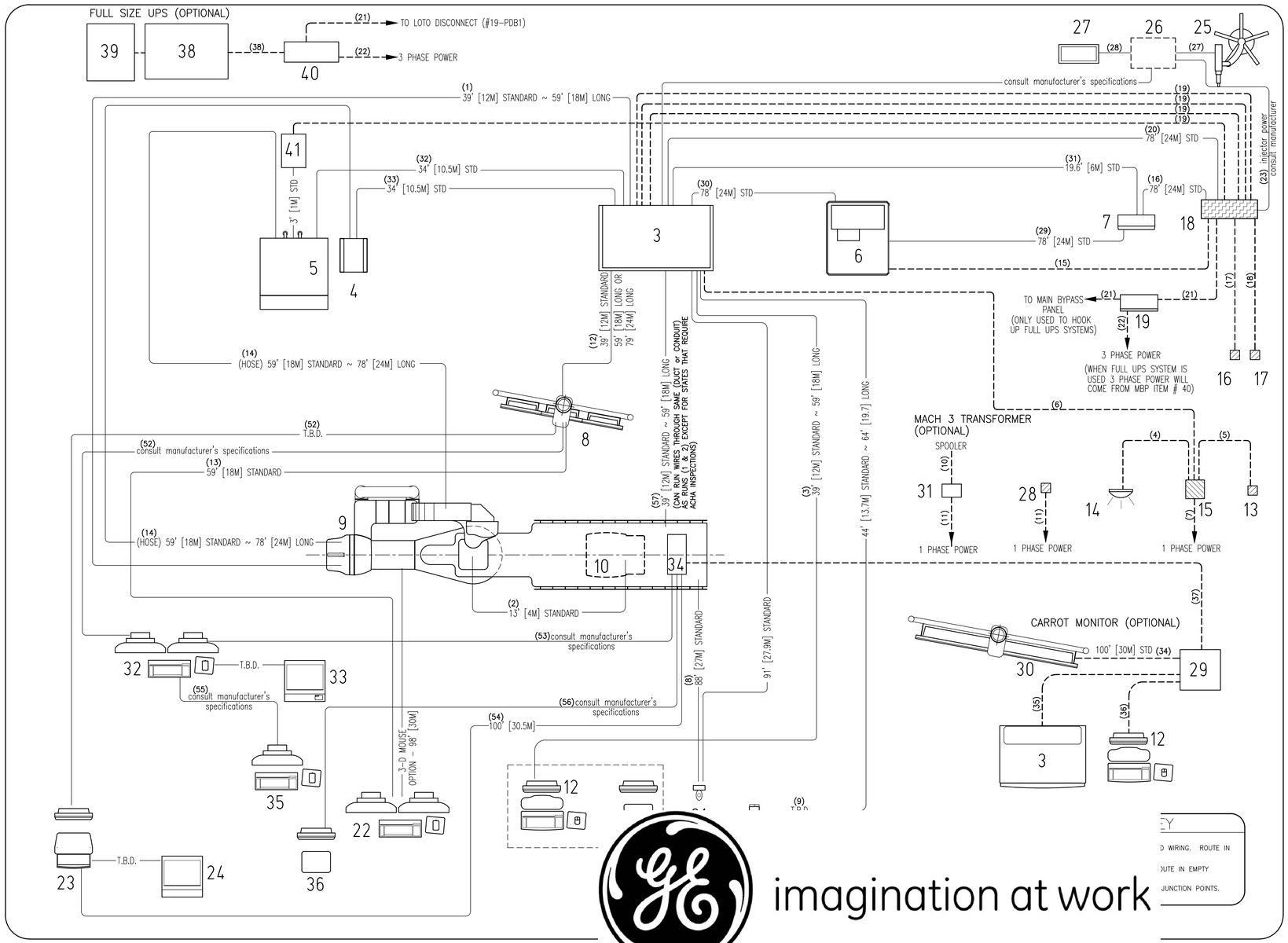

POWER SPECIFICATIONS

INNOVA SYSTEMS

REV. DATE: 01/04/07

VOLTAGE

PRIMARY SOURCE IS REQUIRED FOR ALL INSTALLATIONS.
RANGE OF LINE VOLTAGES :
NOMINAL LINE VOLTAGE OF 360 TO 480, 3 PHASE, 50 OR 60 Hz

REQUIRED POWER SUPPLY: WYE DISTRIBUTION

MAXIMUM DAILY VOLTAGE VARIATION MUST FALL WITHIN ONE OF THE RANGES IN TABLE A.

TABLE A ALLOWABLE INPUT VOLTAGES/ CURRENT DEMAND

NOMINAL VOLTAGE	NORMAL RANGE ±10 PERCENT	CURRENT (AMPS)	
		MAX. MOMENTARY	CONTINUOUS
360	324–396	304	32
380	342–418	289	31
400	360–440	274	29
420	378–462	264	28
440	396–484	249	26
460	414–506	238	25
480	432–528	228	24

ALL CALCULATIONS BASED UPON NOMINAL VOLTAGE

NOTE

LOW LINE CONDITIONS MAY INHIBIT SOME HIGH kVp TECHNIQUES. THE GENERATOR AUTOMATICALLY ESTABLISHES THESE INHIBITS BASED ON ACTUAL LINE CONDITIONS AND SYSTEM REGULATION.

PHASE–BALANCE.

PHASE–TO–PHASE VOLTAGES MUST BE WITHIN +2 PERCENT OF THE LOWEST PHASE–TO–PHASE VOLTAGE. MAXIMUM ALLOWABLE TRANSIENT VOLTAGE EXCURSIONS ARE 2.5 PERCENT OF RATED LINE VOLTAGE AT A MAXIMUM DURATION OF 5 CYCLES AND FREQUENCY OF 10 TIMES PER HOUR.

POWER DEMAND

CONTINUOUS POWER DEMAND = 20KVA. (MAX DEMAND = 171 KVA)

TABLE B MAXIMUM MOMENTARY POWER DEMAND.

DEMAND	ADVANTX 100
kVa *	171
POWER FACTOR AT	0.9
mA	1250
kVp	80

* DEMAND INCLUDES POWER FOR ENTIRE ADVANTX SYSTEM. LINE VOLTAGE REGULATION AT MAXIMUM POWER DEMAND MUST BE LESS THAN OR EQUAL TO 6 PERCENT.

DISTRI–BUTION TRANS–FORMER

FOR A SINGLE UNIT INSTALLATION, THE MINIMUM TRANSFORMER SIZE IS 225 KVA.

ELECTRICAL NOTES

NOTE 1: ALL WIRES SPECIFIED SHALL BE COPPER STRANDED, FLEXIBLE, THERMO–PLASTIC, COLOR CODED, CUT 10 FOOT LONG AT OUTLET BOXES, DUCT TERMINATION POINTS OR STUBBED CONDUIT ENDS. ALL CONDUCTORS, POWER, SIGNAL AND GROUND, MUST BE RUN IN A CONDUIT OR DUCT SYSTEM. ELECTRICAL CONTRACTOR SHALL RING OUT AND TAG ALL WIRES AT BOTH ENDS. WIRE RUNS MUST BE CONTINUOUS COPPER STRANDED AND FREE FROM SPLICES. **ALUMINUM OR SOLID WIRES ARE NOT ALLOWED.**

NOTE 2: WIRE SIZES GIVEN ARE FOR USE OF EQUIPMENT. LARGER SIZES MAY BE REQUIRED BY LOCAL CODES.

NOTE 3: IT IS RECOMMENDED THAT ALL WIRES BE COLOR CODED, AS REQUIRED IN ACCORDANCE WITH NATIONAL AND LOCAL ELECTRICAL CODES.

NOTE 4: CONDUIT SIZES SHALL BE VERIFIED BY THE ARCHITECT, ELECTRICAL ENGINEER OR CONTRACTOR, IN ACCORDANCE WITH LOCAL OR NATIONAL CODES.

NOTE 5: CONVENIENCE OUTLETS ARE NOT ILLUSTRATED. THEIR NUMBER AND LOCATION ARE TO BE SPECIFIED BY OTHERS. LOCATE AT LEAST ONE CONVENIENCE OUTLET CLOSE TO THE SYSTEM CONTROL, THE POWER DISTRITBUTION UNIT AND ONE ON EACH WALL OF THE PROCEDURE ROOM. USE HOSPITAL APPROVED OUTLET OR EQUIVALENT.

NOTE 6: GENERAL ROOM ILLUMINATION IS NOT ILLUSTRATED. CAUTION SHOULD BE TAKEN TO AVOID EXCESSIVE HEAT FROM OVERHEAD SPOTLIGHTS. DAMAGE CAN OCCUR TO CEILING MOUNTING COMPONENTS AND WIRING IF HIGH WATTAGE BULBS ARE USED. RECOMMEND LOW WATTAGE BULBS NO HIGHER THAN 75 WATTS AND USE DIMMER CONTROLS (EXCEPT MR). DO NOT MOUNT LIGHTS DIRECTLY ABOVE AREAS WHERE CEILING MOUNTED ACCESSORIES WILL BE PARKED.

NOTE 7: ROUTING OF CABLE DUCTWORK, CONDUITS, ETC., MUST RUN DIRECT AS POSSIBLE OTHERWISE MAY RESULT IN THE NEED FOR GREATER THAN STANDARD CABLE LENGTHS (REFER TO THE INTERCONNECTION DIAGRAM FOR MAXIMUM USABLE LENGTHS POINT TO POINT).

NOTE 8: CONDUIT TURNS TO HAVE LARGE, SWEEPING BENDS WITH MINIMUM RADIUS IN ACCORDANCE WITH NATIONAL AND LOCAL ELECTRICAL CODES.

NOTE 9: A SPECIAL GROUNDING SYSTEM IS REQUIRED IN ALL PROCEDURE ROOMS BY SOME NATIONAL AND LOCAL CODES. IT IS RECOMMENDED IN AREAS WHERE PATIENTS MIGHT BE EXAMINED OR TREATED UNDER PRESENT, FUTURE, OR EMERGENCY CONDITIONS. CONSULT THE GOVERNING ELECTRICAL CODE AND CONFER WITH APPROPRIATE CUSTOMER ADMINISTRATIVE PERSONNEL TO DETERMINE THE AREAS REQUIRING THIS TYPE OF GROUNDING SYSTEM.

NOTE 10: THE MAXIMUM POINT TO POINT DISTANCES ILLUSTRATED ON THIS DRAWING MUST NOT BE EXCEEDED.

NOTE 11: PHYSICAL CONNECTION OF PRIMARY POWER TO GE EQUIPMENT IS TO BE MADE BY CUSTOMERS ELECTRICAL CONTRACTOR WITH THE SUPERVISION OF A GE REPRESENTATIVE. THE GE REPRESENTATIVE WOULD BE REQUIRED TO IDENTIFY THE PHYSICAL CONNECTION LOCATION, AND INSURE PROPER HANDLING OF GE EQUIPMENT.

NOTE 12: GEHC CONDUCTS POWER AUDITS TO VERIFY QUALITY OF POWER BEING DELIVERED TO THE SYSTEM. THE CUSTOMER'S ELECTRICAL CONTRACTOR IS REQUIRED TO BE AVAILABLE TO SUPPORT THIS ACTIVITY.

THIS SHEET IS PART OF THE DOCUMENT SET LISTED ON SHEET C1 AND SHOULD NOT BE SEPARATED

GE Healthcare
Healthcare Project Implementation – Design Center
Milwaukee, Wisconsin

SHEET TITLE: ELECTRICAL SPECIFICATIONS

MODALITY TYPE: OPTIMA IGS 320–330

THIS PLAN IS SUBMITTED TO SUGGEST LOCATION OF GE HEALTHCARE EQUIPMENT AND ASSOCIATED PRODUCTS. THE LAYOUT WAS DRAWN BASED ON INFORMATION PROVIDED BY OTHERS. IN PREPARING THIS PLAN, EVERY EFFORT HAS BEEN MADE TO CONFORM DETAILS TO ACTUAL EQUIPMENT EXPECTED TO BE INSTALLED. IT IS NOT TO BE USED FOR ACTUAL CONSTRUCTION PURPOSES UNTIL THE CUSTOMER'S ARCHITECT OR ENGINEER HAS ACCEPTED THE RESPONSIBILITY FOR ANY DAMAGES RESULTING THEREFROM.

PROJECT TITLE:
INTERVENTIONAL RADIOLOGY – OPTIMA
TYPICAL FINAL LAYOUT

PROJECT	REVISION
4–100f	00

DATE: 20.Nov.15
DRAWN BY: SLR
CHECKED BY: TST

REVISION HISTORY:

SHEET
E2

PIM R1

RQ – 156428

ELECTRICAL DETAIL
FLOOR BOX WITH NIPPLES (TYPICAL)
ELEC–13
REV. DATE: 09/30/94

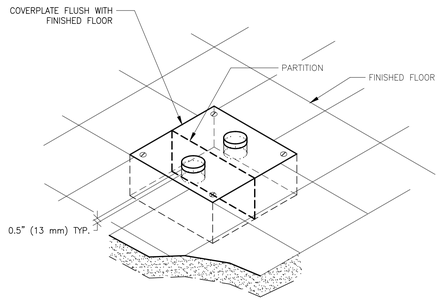

DETAIL NOT TO SCALE

ELECTRICAL DETAIL
VERTICAL WALL DUCT (TYPICAL)
ELEC–6
REV. DATE: 03/19/04

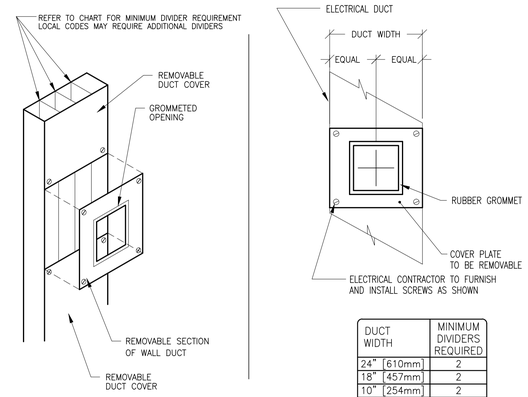

DUCT WIDTH	MINIMUM DIVIDERS REQUIRED
24" [610mm]	2
18" [457mm]	2
10" [254mm]	2
6" [152mm]	1
4" [102mm]	1

DETAIL NOT TO SCALE

ELECTRICAL DETAIL
J.B. / WALL DUCT DETAIL (TYPICAL)
ELEC–2
REV. DATE: 02.Jan.15

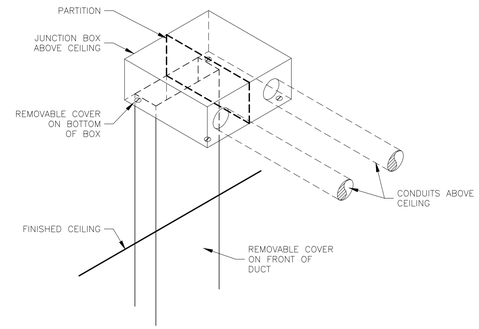

DETAIL NOT TO SCALE

ELECTRICAL DETAIL
BOX WITH COVERPLATE AND NETWORK JACK
ELEC–83
REV. DATE: 10/06/98

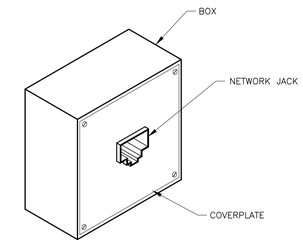

DETAIL NOT TO SCALE

ELECTRICAL DETAIL
NETWORK CONNECTION (TYPICAL)
ELEC–84
REV. DATE: 03/06/04

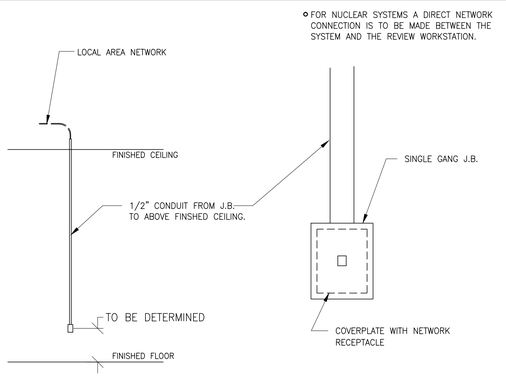

DETAIL NOT TO SCALE

ELECTRICAL DETAIL
BOX WITH COVERPLATE (TYPICAL)
ELEC–8
REV. DATE: 09/30/94

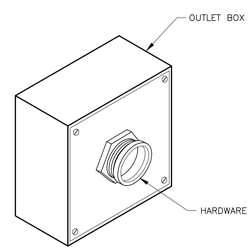

DETAIL NOT TO SCALE

ELECTRICAL DETAIL
HORIZONTAL WALL DUCT (TYPICAL)
ELEC–5
REV. DATE: 03/19/04

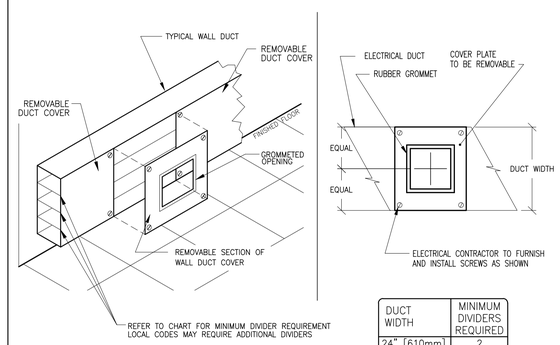

DUCT WIDTH	MINIMUM DIVIDERS REQUIRED
24" [610mm]	2
18" [457mm]	2
10" [254mm]	2
6" [152mm]	1
4" [102mm]	1

DETAIL NOT TO SCALE

ELECTRICAL DETAIL
HORIZONTAL WALL DUCT (TYPICAL)
ELEC–5A
REV. DATE: 06/16/08

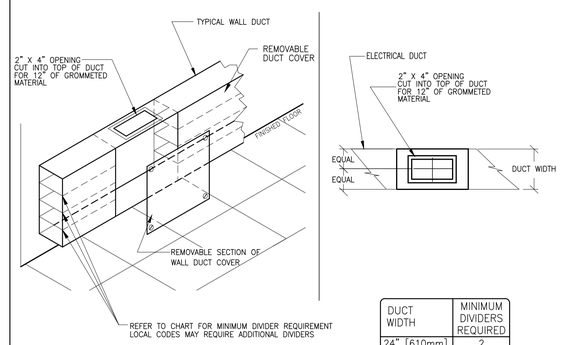

DUCT WIDTH	MINIMUM DIVIDERS REQUIRED
24" [610mm]	2
18" [457mm]	2
10" [254mm]	2
6" [152mm]	1
4" [102mm]	1

DETAIL NOT TO SCALE

ELECTRICAL DETAIL
POSITIONER INTERCONNECT DETAIL, UNDER FLOOR
ELEC–100
REV. DATE: 03/30/04

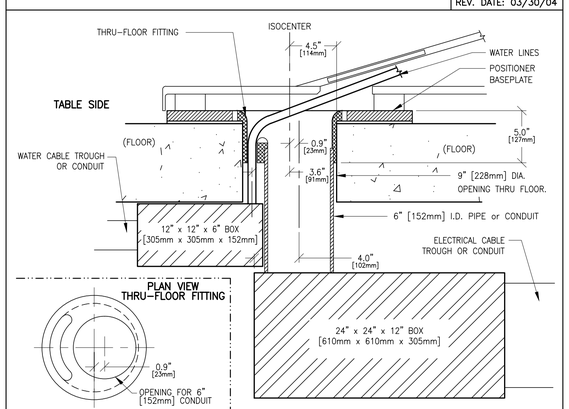

NOTE: PIPE, JUNCTION BOX AND DUCT or CONDUIT ARE TO BE SUPPLIED AND INSTALLED BY CUSTOMER or CUSTOMER'S CONTRACTOR.

DETAIL NOT TO SCALE

ELECTRICAL DETAIL
INNOVA PLUS WITH BOX AND CONDUIT RUNS
ELEC–177
REV. DATE: 05.JUN.13

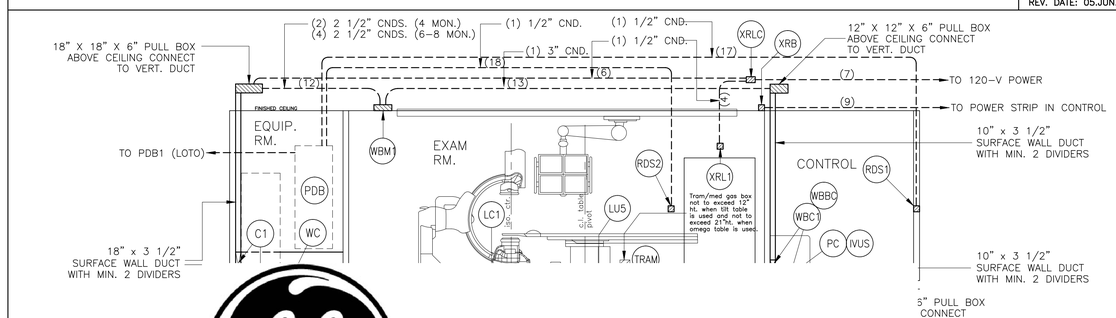

DETAIL NOT TO SCALE

ELECTRICAL DETAIL
TABLE INTERCONNECTION – BOX BELOW FLOOR
ELEC–48
REV. DATE: 01/04/96

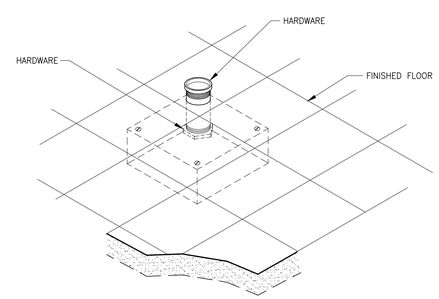

DETAIL NOT TO SCALE

THIS SHEET IS PART OF THE DOCUMENT SET LISTED ON SHEET C1 AND SHOULD NOT BE SEPARATED

imagination at work

GE Healthcare
Healthcare Project Implementation – Design Center
Wisconsin
Milwaukee,

SHEET TITLE: ELECTRICAL DETAILS
MODALITY TYPE: OPTIMA IGS 320–330

THIS PLAN IS SUBMITTED TO SUGGEST LOCATION OF GE HEALTHCARE EQUIPMENT ASSOCIATED WITH THIS PROJECT. THE ARCHITECT/ENGINEER MUST ASSUME RESPONSIBILITY IN PREPARING THIS PLAN. EVERY EFFORT HAS BEEN MADE TO CONFORM DETAILS TO ACTUAL EQUIPMENT EXPECTED TO BE INSTALLED. IT IS NOT TO BE USED FOR ACTUAL CONSTRUCTION PURPOSES UNTIL THE COMPANY CANNOT ACCEPT RESPONSIBILITY FOR ANY DAMAGES RESULTING THEREFROM.

PROJECT TITLE: INTERVENTIONAL RADIOLOGY – OPTIMA
TYPICAL FINAL LAYOUT

PROJECT	REVISION
4–100f	00

DATE: 20.Nov.15
DRAWN BY: SLR
CHECKED BY: TST

REVISION HISTORY:

SHEET
E3

RQ – 156428 PIM R1

ELECTRICAL DETAIL
INSITE CONNECTION (TYPICAL)

ELEC–1
REV. DATE: 04/24/02

ONE OF THE FOLLOWING TWO SELECTIONS MUST BE INSTALLED AT THE LOCATION SHOWN ON THE ELECTRICAL PLAN (SHEET E1) FOR GE INSITE CONNECTION BASED UPON SYSTEM CONFIGURATION.

A) ONE INTERNET ACCESSIBLE VIRTUAL PRIVATE NETWORK (VPN) CONNECTION WITH A STATIC IP ADDRESS, AND ONE TELEPHONE LINE – DEDICATED–DIRECT–DIALING, VOICE GRADE.

OR

B) TWO TELEPHONE LINES – ONE DEDICATED DIRECT–DISTANCE–DIALING, VOICE GRADE AND ONE A DEDICATED DATA LINE.

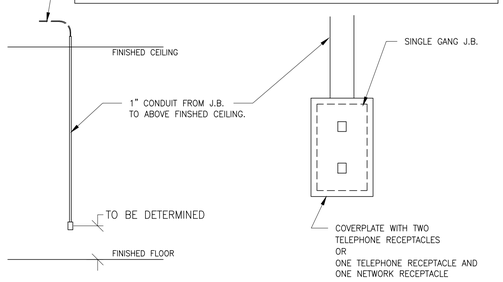

ALL ITEMS ILLUSTRATED ARE TO BE FURNISHED AND INSTALLED BY CUSTOMER OR THEIR CONTRACTOR.

DETAIL NOT TO SCALE

ELECTRICAL DETAIL
INNOVA PLUS MAIN DISCONNECT PANEL

ELEC–161
REV. DATE: 09/27/10

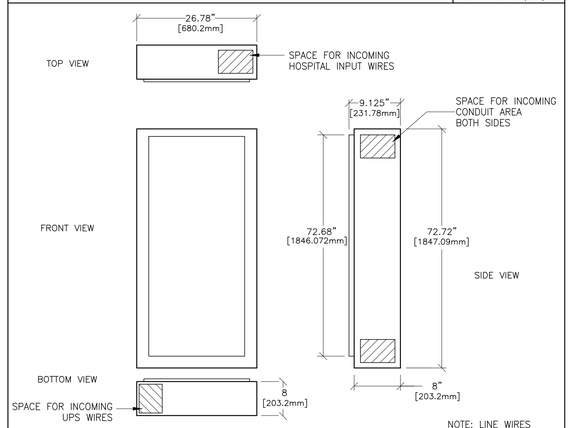

NOTE: LINE WIRES AND UPS WIRES MUST NOT BE MIXED.

DETAIL NOT TO SCALE

ELECTRICAL DETAIL
X–RAY WARNING LIGHT & ROOM LIGHT CONTROL PANEL

ELEC–157
REV. DATE: 04/23/09

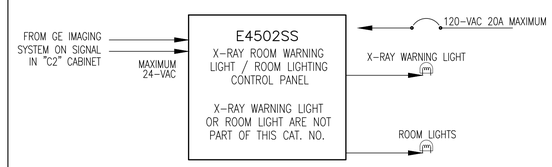

THE E4502SS IS RECOMMENDED IF "X–RAY ON" WARNING LIGHT AND ROOM LIGHT CONTROL ARE UTILIZED

THE R4502RL IS RECOMMENDED IF "X–RAY ON" WARNING LIGHT ONLY

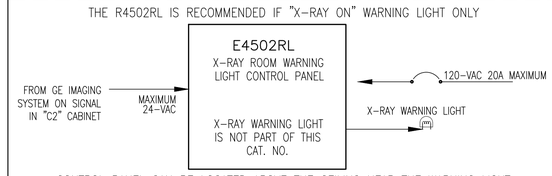

CONTROL PANEL CAN BE LOCATED ABOVE THE CEILING NEAR THE WARNING LIGHT

UNLESS SPECIFIED ON SHEET A1 AS BEING INCLUDED ON EQUIPMENT ORDER, ALL ITEMS ILLUSTRATED ARE TO BE FURNISHED AND INSTALLED BY CUSTOMER'S CONTRACTOR

ELECTRICAL DETAIL
EMERGENCY OFF BUTTON

ELEC–16
REV. DATE: 05/14/09

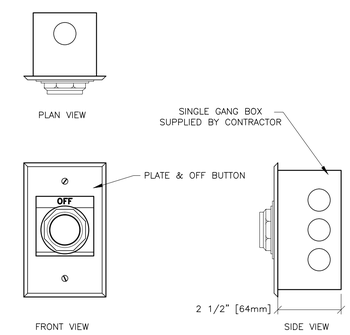

DETAIL NOT TO SCALE

ELECTRICAL DETAIL
CONDUITS THRU–FLOOR (TYPICAL)

ELEC–9
REV. DATE: 08/08/94

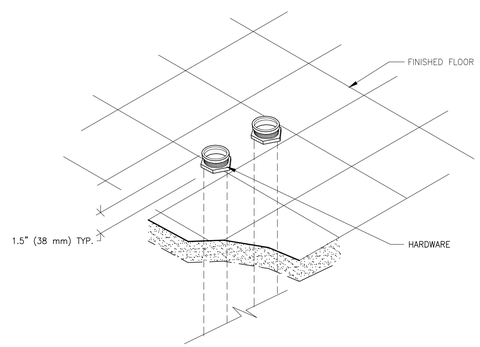

DETAIL NOT TO SCALE

imagination at work

THIS SHEET IS PART OF THE DOCUMENT SET LISTED ON SHEET C1 AND SHOULD NOT BE SEPARATED

RQ – 156428

PIM R1

GE Healthcare

Healthcare Project Implementation – Design Center
Wisconsin
Milwaukee,

SHEET TITLE: ELECTRICAL DETAILS

MODALITY TYPE: OPTIMA IGS 320–330

THIS PLAN IS SUBMITTED TO SUGGEST LOCATION OF GE HEALTHCARE EQUIPMENT AND ASSOCIATED PANELS, FLOOR PLANS, DETAILS, AND ELEVATIONS, WHICH MAY BE NEEDED IN PREPARING THIS PLAN. EVERY EFFORT HAS BEEN MADE TO CONFORM DETAILS TO ACTUAL EQUIPMENT EXPECTED TO BE INSTALLED. IT IS NOT TO BE USED FOR ACTUAL CONSTRUCTION PURPOSES UNLESS VERIFIED AND THE COMPANY CANNOT ACCEPT RESPONSIBILITY FOR ANY DAMAGES RESULTING THEREFROM.

PROJECT TITLE:
INTERVENTIONAL RADIOLOGY – OPTIMA
TYPICAL FINAL LAYOUT

PROJECT	REVISION
4–100f	00

DATE: 20.Nov.15
DRAWN BY: SLR
CHECKED BY: TST

REVISION HISTORY:

SHEET
E4

EQUIPMENT DETAIL
XT RADIOGRAPHIC SUSPENSION, INBOARD MOUNTING
B2004
REV. DATE: 18.Apr.11

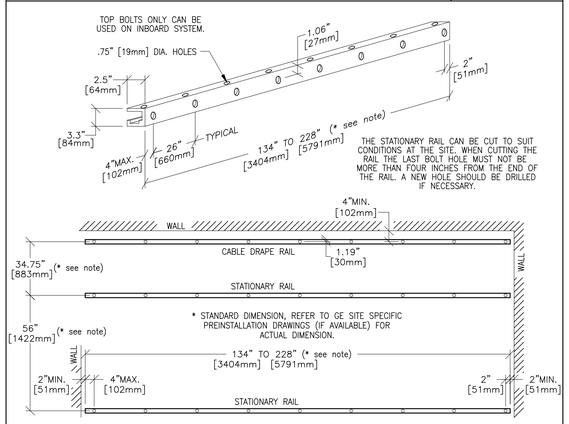

DETAIL NOT TO SCALE

EQUIPMENT DETAIL
LCD MONITOR SUSPENSION, 4, 6 OR 8 MONITORS
B2010A
REV. DATE: 12/16/03

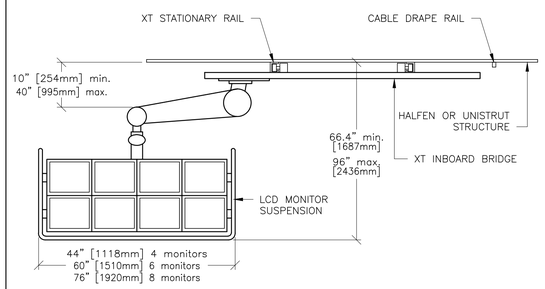

DETAIL NOT TO SCALE

EQUIPMENT DETAIL
ADVANTAGE WINDOWS WORKSTATION
M1013AW
REV. DATE: 20.MAR.12

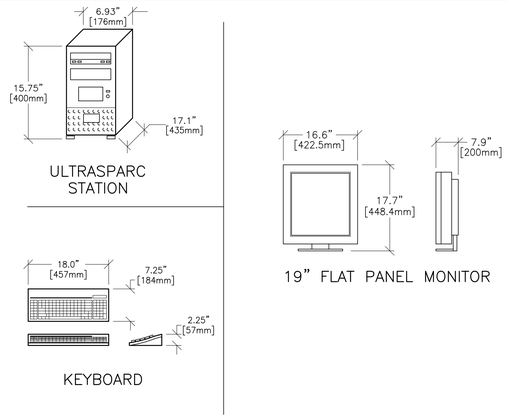

DETAIL NOT TO SCALE

EQUIPMENT DETAIL
19" FLAT PANEL MONITOR WITH STAND
C7619D
REV. DATE: 20.MAR.12

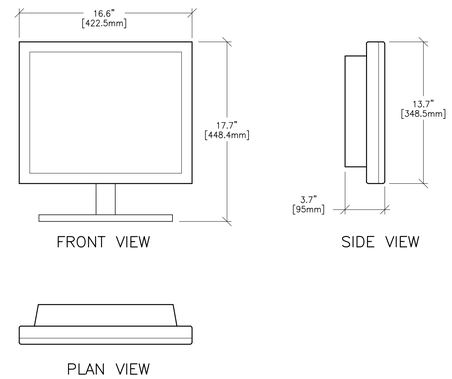

DETAIL NOT TO SCALE

EQUIPMENT DETAIL
MAVIG EYE & THYROID SHIELD WITH LAMP
B50-31E
REV. 00: 10/03/97

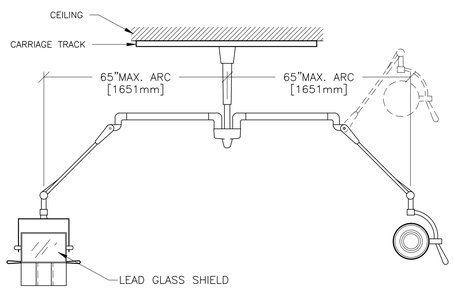

DETAIL NOT TO SCALE

EQUIPMENT DETAIL
INJECTOR REMOTE CONTROL AND ELECTRONICS
B50-28
REV. DATE: 02.AUG.12

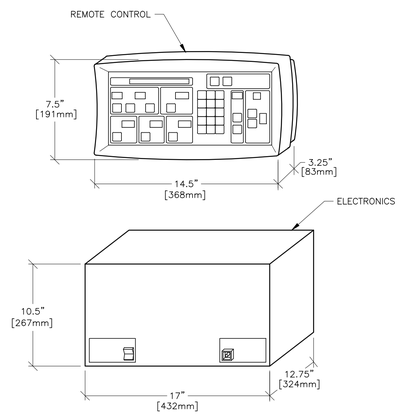

DRAWING NOT TO SCALE

EQUIPMENT DETAIL
INJECTOR ON TABLE RAIL
B50-30A
REV. DATE: 02.AUG.12

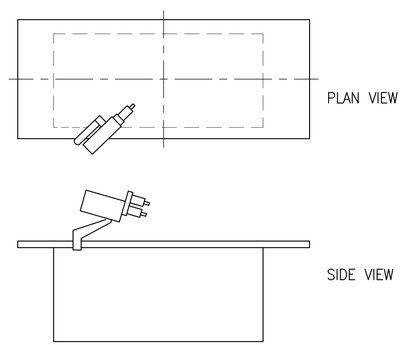

DRAWING NOT TO SCALE

EQUIPMENT DETAIL
INNOVA VASCULAR SYSTEM
B5050A
REV. DATE: 02.AUG.12

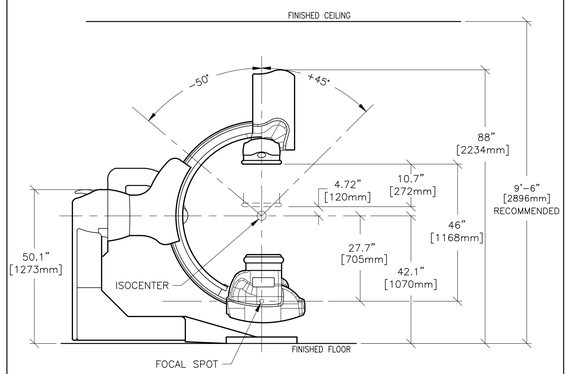

DETAIL NOT TO SCALE

EQUIPMENT DETAIL
INNOVA VASCULAR SYSTEM
B5050B
REV. DATE: 27.SEP.12

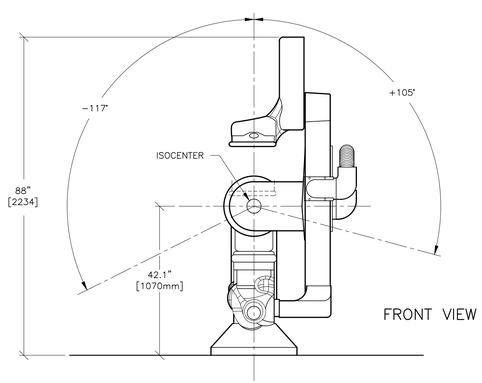

DRAWING NOT TO SCALE

EQUIPMENT DETAIL
INNOVA VASCULAR SYSTEM
B5050
REV. DATE: 27.SEP.12

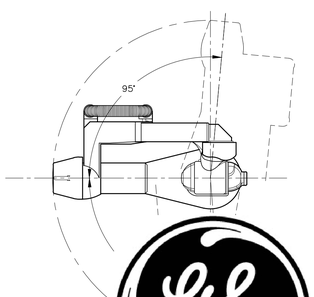

EQUIPMENT DETAIL
SHIPPING CREATE FOR OMEGA & INNOVA IQ TABLES
B5050E
REV. DATE: 26.JUL.12

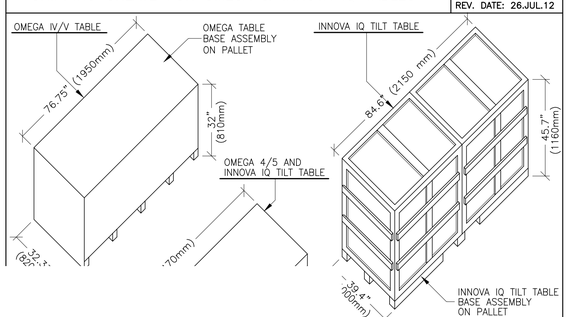

EQUIPMENT DETAIL
C2 CABINET ON SHIPPING DOLLY
B5050F
REV. DATE: 26.JUL.12

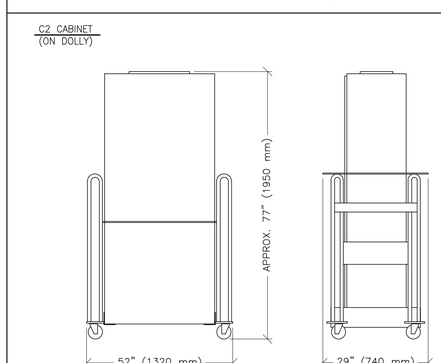

SHIPPING WEIGHT: 821 LBS. (372 kg)(C2-INNOVA/DISCOVERY SYSTEMS)
SHIPPING WEIGHT: 785 LBS. (356 kg)(C2-BIPLANE SYSTEMS)

DETAIL NOT TO SCALE

THIS SHEET IS PART OF THE DOCUMENT SET LISTED ON SHEET C1 AND SHOULD NOT BE SEPARATED

imagination at work

GE Healthcare
Healthcare Project Implementation – Design Center
Milwaukee, Wisconsin

SHEET TITLE: EQUIPMENT DETAILS
MODALITY TYPE: OPTIMA IGS 320-330

THIS PLAN IS SUBMITTED TO SUGGEST LOCATION OF GE HEALTHCARE EQUIPMENT AND ASSOCIATED PRODUCTS. ELECTRICAL, PLUMBING, AND STRUCTURAL REQUIREMENTS. IN PREPARING THIS PLAN, EVERY EFFORT HAS BEEN MADE TO CONFORM DETAILS TO ACTUAL EQUIPMENT EXPECTED TO BE INSTALLED. IT IS NOT TO BE USED FOR ACTUAL CONSTRUCTION PURPOSES. THE GE COMPANY CANNOT ACCEPT RESPONSIBILITY FOR ANY DAMAGES RESULTING THEREFROM.

PROJECT TITLE:
INTERVENTIONAL RADIOLOGY – OPTIMA
TYPICAL FINAL LAYOUT

PROJECT	REVISION
4-100f	00

DATE: 20.Nov.15
DRAWN BY: SLR
CHECKED BY: TST

REVISION HISTORY:

SHEET
D1

PIM R1
RQ – 156428

EQUIPMENT DETAIL
SHIPPING DOLLY FOR INNOVA LC POSITIONER

B5050G
REV. DATE: 12/07/09

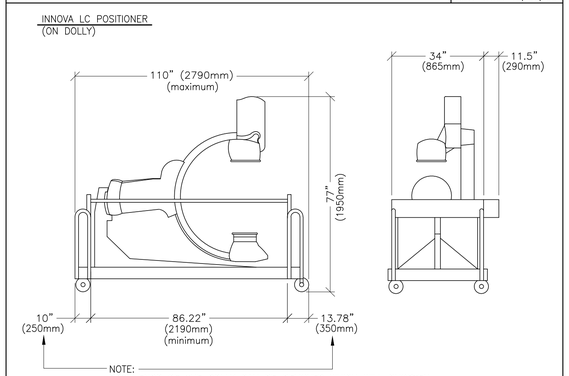

NOTE:
BOTH ENDS OF THE DOLLY CAN BE REMOVED WHICH WILL SHORTEN LC GANTRY DOLLY DONE TO 86.22" (2190mm) RECOMMEND ONLY ONE SIDE BE REMOVED WHEN DELIVERY THROUGH HOSPITAL.

SHIPPING WEIGHT: 2340 lbs. (1060 kg)

DETAIL NOT TO SCALE

EQUIPMENT DETAIL
C1 & C3 CABINETS ON SHIPPING DOLLY

B5050H
REV. DATE: 26.JUL.12

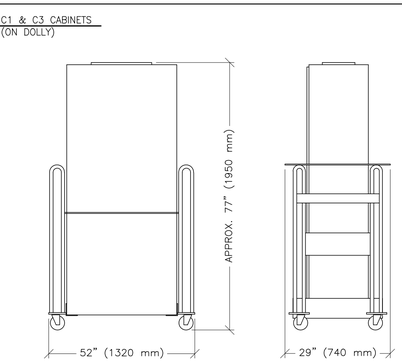

SHIPPING WEIGHT: 1277 lbs (579 kg) C1–INNOVA/DISCOVERY SYSTEMS)
SHIPPING WEIGHT: 1052 lbs (477 kg) C1 FRONTAL – BIPLANE SYSTEMS)
SHIPPING WEIGHT: 866 lbs (393 kg) C3 LATERAL – BIPLANE SYSTEMS)

DETAIL NOT TO SCALE

EQUIPMENT DETAIL
LP AND LC GANTRY DELIVERY PATH

B5050J
REV. DATE: 12/07/09

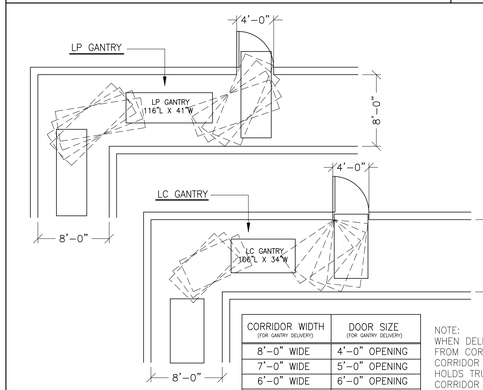

CORRIDOR WIDTH (FOR GANTRY DELIVERY)	DOOR SIZE (FOR GANTRY DELIVERY)
8'–0" WIDE	4'–0" OPENING
7'–0" WIDE	5'–0" OPENING
6'–0" WIDE	6'–0" OPENING
5'–0" WIDE	7'–0" OPENING
4'–0" WIDE	8'–0" OPENING

NOTE:
WHEN DELIVERING GANTRY FROM CORRIDOR TO CORRIDOR THE SAME HOLDS TRUE AS CORRIDOR TO DOOR SIZE.

DETAIL NOT TO SCALE

EQUIPMENT DETAIL
INNOVA RADIATION SCATTER PLOTS

B5050P
REV. DATE: 27.SEP.12

UNITS: RELATIVE AIR KERMA: uGy/uGym²
DISTANCES: RADIUS AT 1, 2 AND 3 METERS

NOTE:
FOR REFERENCE ONLY. PLEASE REFER TO OPERATOR'S MANUAL FOR ADDITIONAL INFORMATION.

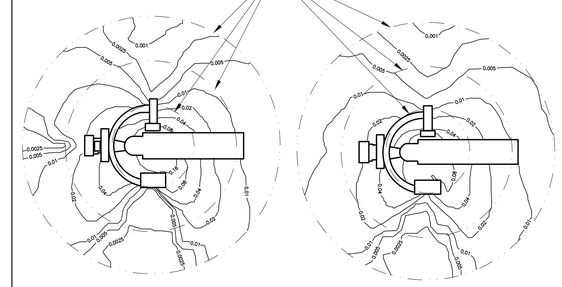

LATERAL 1 METER

LATERAL 1.5 METERS

4–4–4 GANTRY IN LATERAL POSITION – DOSE AT 1.5 METER FROM GROUND

4–4–3 GANTRY IN LATERAL POSITION – DOSE AT 1 METER FROM GROUND

DETAIL NOT TO SCALE

EQUIPMENT DETAIL
INNOVA RADIATION SCATTER PLOTS

B5050R
REV. DATE: 27.SEP.12

UNITS: RELATIVE AIR KERMA: µGy/µGym²
DISTANCES: RADIUS AT 1, 2 AND 3 METERS

NOTE:
FOR REFERENCE ONLY. PLEASE REFER TO OPERATOR'S MANUAL FOR ADDITIONAL INFORMATION.

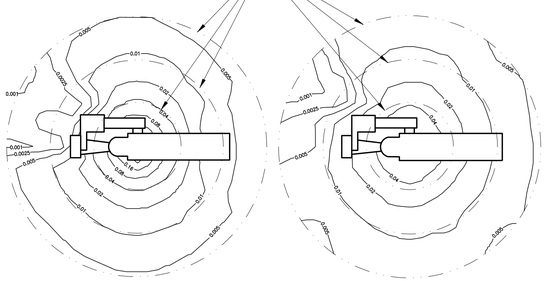

VERTICAL 1 METER

VERTICAL 1.5 METERS

4–4–2 GANTRY IN VERTICAL POSITION – DOSE AT 1.5 METER FROM GROUND

4–4–3 GANTRY IN LATERAL POSITION – DOSE AT 1 METER FROM GROUND

DETAIL NOT TO SCALE

EQUIPMENT DETAIL
OMEGA V TABLE

B5061
REV. DATE: 09.MAR.12

SHIPPING DIMENSIONS: TABLE BASE
84.2"(2140mm)D x 38"(960mm)W x 49"(1240mm)H
SHIPPING DIMENSIONS: TABLE TOP
33"(840mm)D x 137"(3470mm)W x 9"(220mm)H

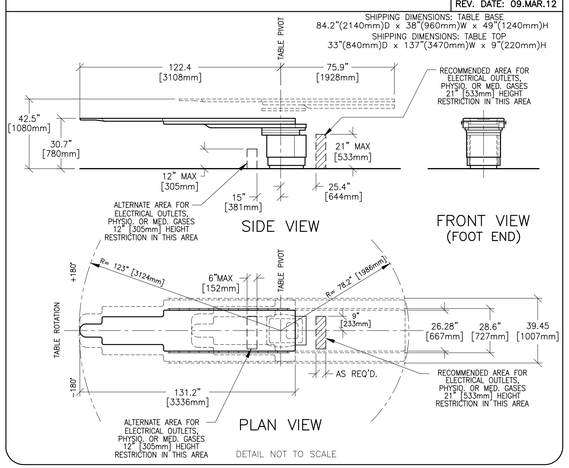

DETAIL NOT TO SCALE

EQUIPMENT DETAIL
UPS INTERFACE BOX

E4502IB
REV. DATE: 07/11/05

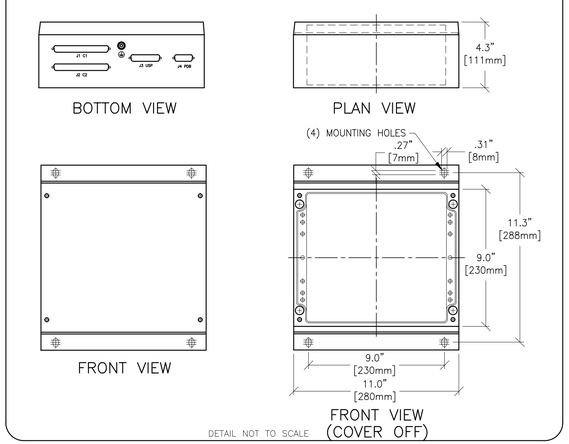

DETAIL NOT TO SCALE

EQUIPMENT DETAIL
SYSTEM CONTROL CABINET

B00015
REV. DATE: 28.SEP.15

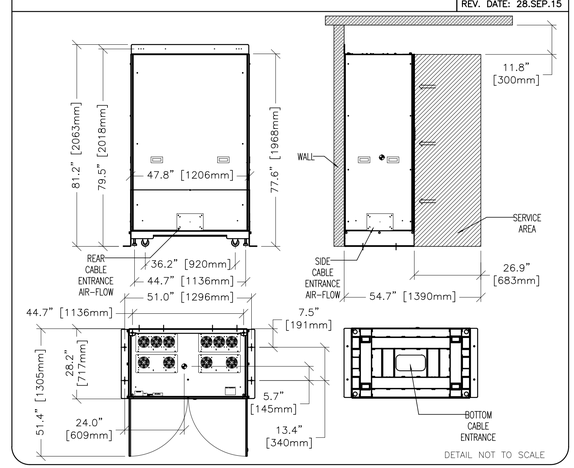

DETAIL NOT TO SCALE

EQUIPMENT DETAIL
INNOVA MAIN DISCONNECT PANEL

E4502M
REV. DATE: 02.AUG.12

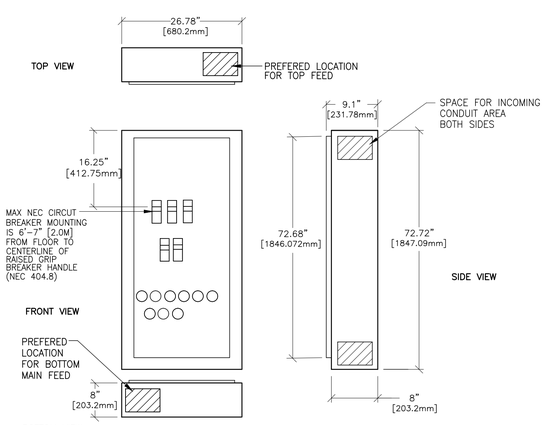

DETAIL NOT TO SCALE

EQUIPMENT DETAIL
DIGITAL ENERGY SG SERIES 10–20kVA UPS

E4502SG
REV. DATE: 05/10/05

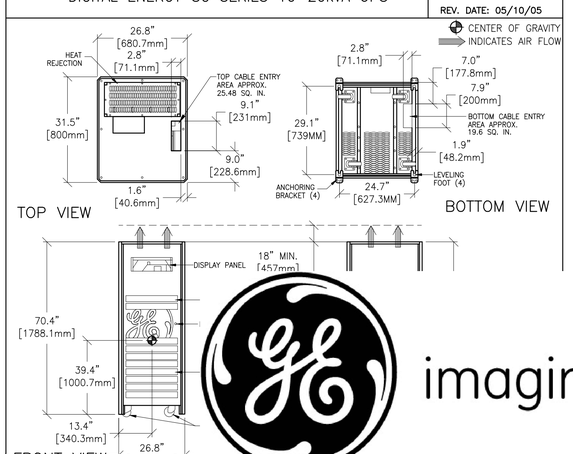

EQUIPMENT DETAIL
DETECTOR CONDITIONER

B5049F
REV. DATE: 02.AUG.12

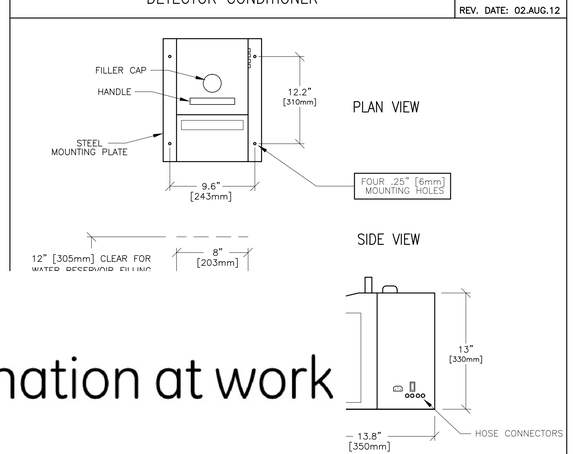

EQUIPMENT DETAIL
COOLIX 4100 CHILLER – FLOOR SPACE

B–IGS03
REV. DATE: 12.Mar.12

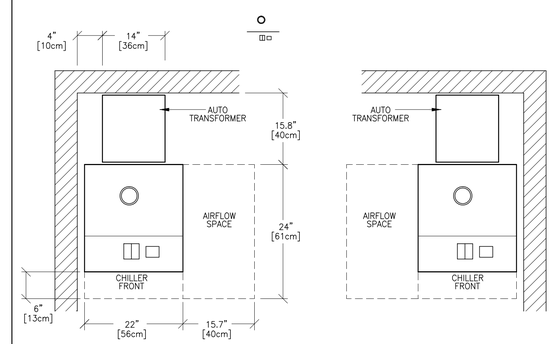

FLOOR SPACE – PLAN VIEW

DETAIL NOT TO SCALE

imagination at work

THIS SHEET IS PART OF THE DOCUMENT SET LISTED ON SHEET C1 AND SHOULD NOT BE SEPARATED

GE Healthcare
Healthcare Project Implementation – Design Center
Wisconsin
Milwaukee,

SHEET TITLE: EQUIPMENT DETAILS
MODALITY TYPE: OPTIMA IGS 320–330

THIS PLAN IS SUBMITTED TO SUGGEST LOCATION OF GE HEALTHCARE EQUIPMENT AND ASSOCIATED UTILITIES WITHIN A ROOM. ALL DIMENSIONS ARE APPROXIMATE. IN PREPARING THIS PLAN, EVERY EFFORT HAS BEEN MADE TO CONFORM DETAILS TO ACTUAL EQUIPMENT EXPECTED TO BE INSTALLED. IT IS NOT TO BE USED FOR CONSTRUCTION PURPOSES UNTIL REVIEWED BY THE COMPANY. THE COMPANY CANNOT ACCEPT RESPONSIBILITY FOR ANY DAMAGES RESULTING THEREFROM.

PROJECT TITLE:
INTERVENTIONAL RADIOLOGY – OPTIMA
TYPICAL FINAL LAYOUT

PROJECT	REVISION
4–100f	00

DATE: 20.Nov.15
DRAWN BY: SLR
CHECKED BY: TST

REVISION HISTORY:

SHEET
D2

RQ – 156428 PIM R1

EQUIPMENT DETAIL
COOLIX 4100 CHILLER AND AUTOTRANSFORMER

B-IGS04
REV. DATE: 12.Mar.12

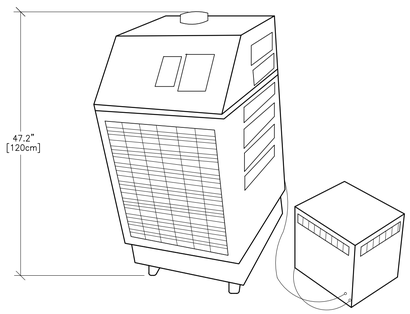

DETAIL NOT TO SCALE

EQUIPMENT DETAIL
COOLIX 4100 CHILLER AUTOTRANSFORMER

B-IGS05
REV. DATE: 12.Mar.12

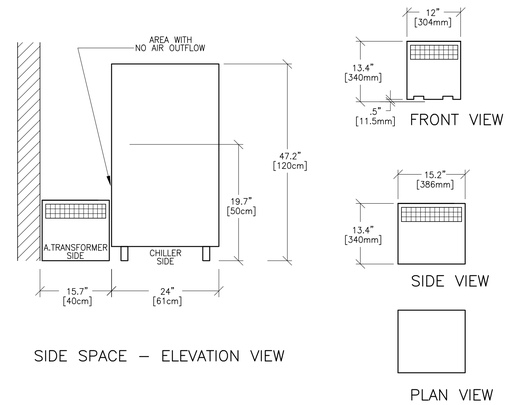

SIDE SPACE – ELEVATION VIEW

DETAIL NOT TO SCALE

EQUIPMENT DETAIL
DL KEYPAD

C7412H
REV. DATE: 02.AUG.12

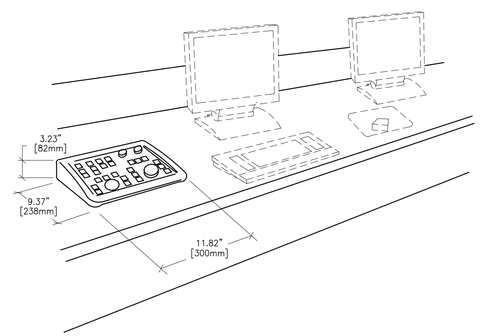

DETAIL NOT TO SCALE

TYPICAL CONTROL ROOM
SINGLE PLANE SYSTEM

B5050C
REV. DATE: 02.AUG.12

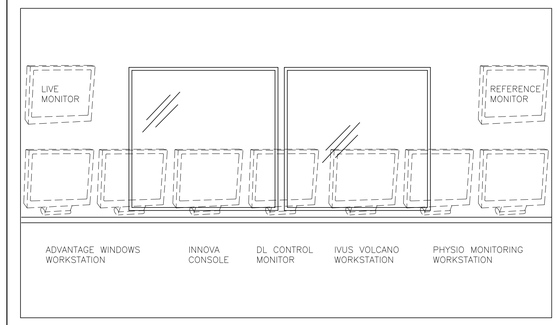

DETAIL NOT TO SCALE

EQUIPMENT DETAIL
RCIM WITH DL KEYBOARD CONSOLE

C75-02
REV. DATE: 10/25/10

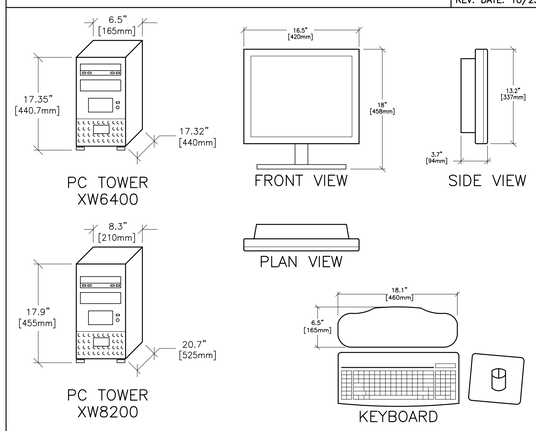

DETAIL NOT TO SCALE

EQUIPMENT DETAIL
VITALINQ COMMUNICATION AND MUSIC SYSTEM
(SHOWING PYRAMID MICROPHONE)

B870K
REV. DATE: 13.May.15

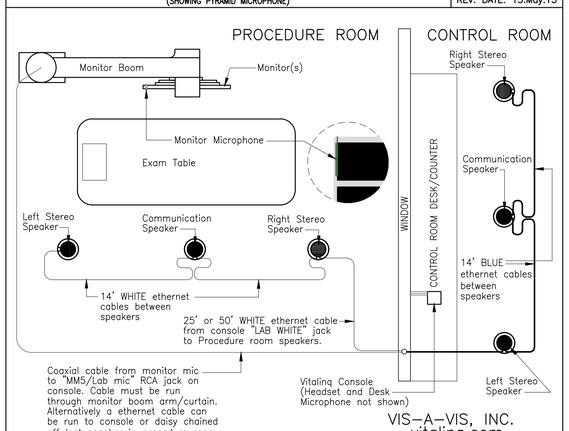

DETAIL NOT TO SCALE

EQUIPMENT DETAIL
TRAM-RAC 4A

B5047
REV. DATE: 05/26/04

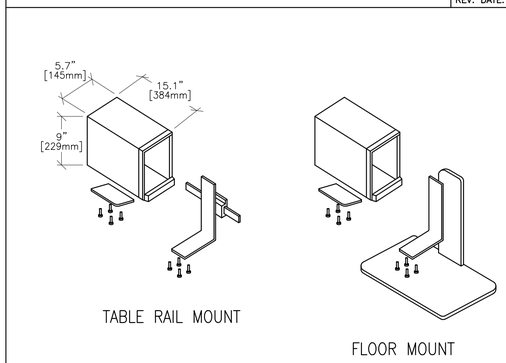

DETAIL NOT TO SCALE

EQUIPMENT DETAIL
XR-BUZZER BRACKET

B5150H
REV. 00: 10/30/08

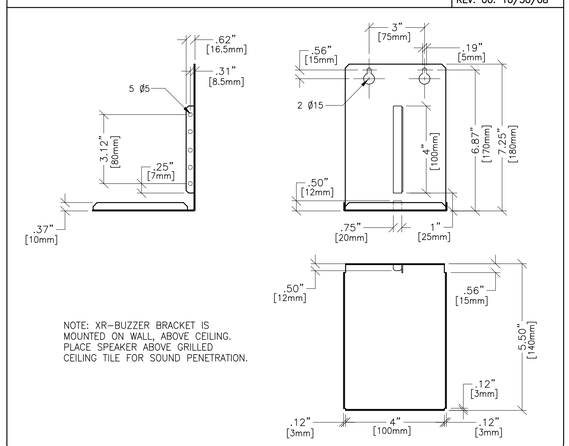

NOTE: XR-BUZZER BRACKET IS
MOUNTED ON WALL, ABOVE CEILING.
PLACE SPEAKER ABOVE GRILLED
CEILING TILE FOR SOUND PENETRATION.

DETAIL NOT TO SCALE

imagination at work

THIS SHEET IS PART OF THE DOCUMENT SET LISTED ON SHEET C1 AND SHOULD NOT BE SEPARATED

RQ – 156428 PIM R1

GE Healthcare
Healthcare Project Implementation – Design Center
Wisconsin
Milwaukee,

SHEET TITLE: EQUIPMENT DETAILS
MODALITY TYPE: OPTIMA IGS 320-330

THIS PLAN IS SUBMITTED TO SUGGEST LOCATION OF GE HEALTHCARE EQUIPMENT ASSOCIATED WITH THIS PROJECT. ALL DIMENSIONS, DETAILS AND ROOM LAYOUTS. IN PREPARING THIS PLAN, EVERY EFFORT HAS BEEN MADE TO CONFORM DETAILS TO ACTUAL EQUIPMENT EXPECTED TO BE INSTALLED. IT IS NOT TO BE USED FOR CONSTRUCTION PURPOSES UNTIL APPROVED BY THE CUSTOMER. THE COMPANY CANNOT ACCEPT RESPONSIBILITY FOR ANY DAMAGES RESULTING THEREFROM.

PROJECT TITLE:
INTERVENTIONAL
RADIOLOGY – OPTIMA
TYPICAL FINAL LAYOUT

PROJECT	REVISION
4-100f	00

DATE: 20.Nov.15
DRAWN BY: SLR
CHECKED BY: TST

REVISION HISTORY:

SHEET
D3