GE Healthcare

Innova 2121-IQ/3131-IQ Biplane Cardiovascular Imaging System

Pre-Installation Manual

OPERATING DOCUMENTATION

5177951-4-1EN
Revision 1

ATTENTION

LES APPAREILS A RAYONS X SONT DANGEREUX A LA FOIS POUR LE PATIENT ET POUR LE MANIPULATEUR SI LES MESURES DE PROTECTION NE SONT PAS STRICTEMENT APPLIQUEES

Bien que cet appareil soit construit selon les normes de sécurité les plus sévères, la source de rayonnement X représente un danger lorsque le manipulateur est non qualifié ou non averti.
Une exposition excessive au rayonnement X entraîne des dommages à l'organisme.
Par conséquent, toutes les précautions doivent être prises pour éviter que les personnes non autorisées ou non qualifiées utilisent cet appareil créant ainsi un danger pour les autres et pour elles-mêmes.
Avant chaque manipulation, les personnes qualifiées et autorisées à se servir de cet appareil doivent se renseigner sur les mesures de protection établies par la Commission Internationale de la Protection Radiologique, Annales 26 : Recommandations de la Commission Internationale sur la Protection Radiologique et les normes nationales en vigueur.

WARNING

X-RAY EQUIPMENT IS DANGEROUS TO BOTH PATIENT AND OPERATOR UNLESS MEASURES OF PROTECTION ARE STRICTLY OBSERVED

Though this equipment is built to the highest standards of electrical and mechanical safety, the useful x-ray beam becomes a source of danger in the hands of the unauthorized or unqualified operator.
Excessive exposure to x-radiation causes damage to human tissue.
Therefore, adequate precautions must be taken to prevent unauthorized or unqualified persons from operating this equipment or exposing themselves or others to its radiation.
Before operation, persons qualified and authorized to operate this equipment should be familiar with the Recommendations of the International Commission on Radiological Protection, contained in Annals Number 26 of the ICRP, and with applicable national standards.

ATENCION

LOS APARATOS DE RAYOS X SON PELIGROSOS PARA EL PACIENTE Y EL MANIPULADOR CUANDO LAS NORMAS DE PROTECCION NO ESTAN OBSERVADAS

Aunque este aparato está construido según las normas de seguridad más estrictas, la radiación X constituye un peligro al ser manipulado por personas no autorizadas o incompetentes. Una exposición excesiva a la radiación X puede causar daños al organismo.
Por consiguiente, se deberán tomar todas las precauciones necesarias para evitar que las personas incompetentes o no autorizadas utilicen este aparato, lo que sería un peligro para los demás y para sí mismas.
Antes de efectuar las manipulaciones, las personas habilitadas y competentes en el uso de este aparato, deberán informarse sobre las normas de protección fijadas por la Comisión Internacional de la Protección Radiológica, Anales No 26: Recomendaciónes de la Comisión Internacional sobre la Protección Radiológica y normas nacionales.

ACHTUNG

RÖNTGENAPPARATE SIND EINE GEFAHR FÜR PATIENTEN SOWIE BEDIENUNGSPERSONAL, WENN DIE GELTENDEN SICHERHEITSVORKEHRUNGEN NICHT GENAU BEACHTET WERDEN

Dieser Apparat entspricht in seiner Bauweise strengsten elektrischen und mechanischen Sichereitsnormen, doch in den Händen unbefugter oder unqualifizierter Personen wird er zu einer Gefahrenquelle.
Übermäßige Röntgenbestrahlung ist für den menschlichen Organismus schädlich.
Deswegen sind hinreichende Vorsichtsmaßnahmen erforderlich, um zu verhindern, daßunbefugte oder unqualifizierte Personen solche Geräte bedienen oder sich selbst und andere Personen deren Bestrahlung aussetzen können.
Vor Inbetriebnahme dieses Apparats sollte sich das qualifizierte und befugte Bedienungspersonal mit den geltenden Kriterien für den gefahrlosen Strahleneinsatz durch sorgfältiges Studium des Hefts Nr. 26 der Internationalen Kommission für Strahlenschutz (ICRP) vertraut machen: Empfehlungen der Internationalen Kommission für Strahlenschutz und anderer nationaler Normenbehörden.

Important Information

LANGUAGE

ПРЕДУПРЕЖДЕНИЕ
(BG)

Това упътване за работа е налично само на английски език с изключенията на случаите, когато се изисква изрично по друг начин от местното законодателство, или от споразумение на местно ниво.

- Ако доставчикът на услугата на клиента изиска друг език, задължение на клиента е да осигури превод.
- Не използвайте оборудването, преди да сте се консултирали и разбрали упътването за работа.
- Неспазването на това предупреждение може да доведе до нараняване на доставчика на услугата, оператора или пациента в резултат на токов удар, механична или друга опасност.

警告
(ZH-CN)

本维修手册仅提供英文版本，除非当地法律或本地供应协议另有明确要求。

- 如果客户的维修服务人员需要非英文版本，则客户需自行提供翻译服务。
- 未详细阅读和完全理解本维修手册之前，不得进行维修。
- 忽略本警告可能对维修服务人员、操作人员或患者造成触电、机械伤害或其他形式的伤害。

VÝSTRAHA
(CS)

Tento provozní návod existuje pouze v anglickém jazyce, pokud není jinak výslovně vyžadováno místními zákony nebo odsouhlaseno na místní úrovni.

- V případě, že externí služba zákazníkům potřebuje návod v jiném jazyce, je zajištění překladu do odpovídajícího jazyka úkolem zákazníka.
- Nesnažte se o údržbu tohoto zařízení, aniž byste si přečetli tento provozní návod a pochopili jeho obsah.
- V případě nedodržování této výstrahy může dojít k poranění pracovníka prodejního servisu, obslužného personálu nebo pacientů vlivem elektrického proudu, respektive vlivem mechanických či jiných rizik.

ADVARSEL

(DA)

Denne servicemanual findes kun på engelsk, medmindre andet kræves i henhold til lokal lovgivning eller lokal aftale.

- Hvis en kundes tekniker har brug for et andet sprog end engelsk, er det kundens ansvar at sørge for oversættelse.
- Forsøg ikke at servicere udstyret uden at læse og forstå denne servicemanual.
- Manglende overholdelse af denne advarsel kan medføre skade på grund af elektrisk stød, mekanisk eller anden fare for teknikeren, operatøren eller patienten.

WAARSCHUWING

(NL)

Deze onderhoudshandleiding is enkel in het Engels verkrijgbaar, tenzij expliciet vereist door plaatselijke regelgeving of overeengekomen op lokaal niveau.

- Als het onderhoudspersoneel een andere taal vereist, dan is de klant verantwoordelijk voor de vertaling ervan.
- Probeer de apparatuur niet te onderhouden alvorens deze onderhoudshandleiding werd geraadpleegd en begrepen is.
- Indien deze waarschuwing niet wordt opgevolgd, zou het onderhoudspersoneel, de operator of een patiënt gewond kunnen raken als gevolg van een elektrische schok, mechanische of andere gevaren.

WARNING

(EN)

This service manual is available in english only except as otherwise expressly required by local law or agreed to at a local level.

- If a customer's service provider requires a language other than english, it is the customer's responsibility to provide translation services.
- Do not attempt to service the equipment unless this service manual has been consulted and is understood.
- Failure to heed this warning may result in injury to the service provider, operator or patient from electric shock, mechanical or other hazards.

HOIATUS

(ET)

See teenindusjuhend on saadaval ainult inglise keeles, kui kohalikud seadused ei ütle teisiti või kui kohalikes õigusaktides ei ole otseselt teisiti ette nähtud.

- Kui klienditeeninduse osutaja nõuab juhendit inglise keelest erinevas keeles, vastutab klient tõlketeenuse osutamise eest.
- Ärge üritage seadmeid teenindada enne eelnevalt käesoleva teenindusjuhendiga tutvumist ja sellest aru saamist.
- Käesoleva hoiatuse eiramine võib põhjustada teenuseosutaja, operaatori või patsiendi vigastamist elektrilöögi, mehaanilise või muu ohu tagajärjel.

VAROITUS

(FI)

Tämä huolto-ohje on saatavilla vain englanniksi, ellei paikallinen laki nimenomaan toisin vaadi tai jos toisin on sovittu paikallisella tasolla.

- Jos asiakkaan huoltohenkilöstö vaatii muuta kuin englanninkielistä materiaalia, tarvittavan käännöksen hankkiminen on asiakkaan vastuulla.
- Älä yritä korjata laitteistoa ennen kuin olet varmasti lukenut ja ymmärtänyt tämän huolto-ohjeen.
- Mikäli tätä varoitusta ei noudateta, seurauksena voi olla huoltohenkilöstön, laitteiston käyttäjän tai potilaan vahingoittuminen sähköiskun, mekaanisen vian tai muun vaaratilanteen vuoksi.

ATTENTION

(FR)

Sauf exigence contraire des lois locales ou accord contraire au niveau local, ce manuel d'installation et de maintenance n'est disponible qu'en anglais.

- Si le technicien d'un client a besoin de ce manuel dans une langue autre que l'anglais, il incombe au client de le faire traduire.
- Ne pas tenter d'intervenir sur les équipements tant que ce manuel d'installation et de maintenance n'a pas été consulté et compris.
- Le non-respect de cet avertissement peut entraîner chez le technicien, l'opérateur ou le patient des blessures dues à des dangers électriques, mécaniques ou autres.

WARNUNG
(DE)

Diese Serviceanleitung existiert nur in englischer Sprache, sofern nichts anderes gesetzlich vorgeschrieben oder auf lokaler Ebene vereinbart wurde.

- Falls ein fremder Kundendienst eine andere Sprache benötigt, ist es aufgabe des Kunden für eine Entsprechende Übersetzung zu sorgen.
- Versuchen Sie nicht diese Anlage zu warten, ohne diese Serviceanleitung gelesen und verstanden zu haben.
- Wird diese Warnung nicht beachtet, so kann es zu Verletzungen des Kundendiensttechnikers, des Bedieners oder des Patienten durch Stromschläge, mechanische oder sonstige Gefahren kommen.

ΠΡΟΕΙΔΟΠΟΙΗΣΗ
(EL)

Το παρόν εγχειρίδιο σέρβις διατίθεται μόνο στα αγγλικά, εκτός αν η τοπική νομοθεσία απαιτεί κάτι άλλο ή υπάρχει διαφορετική συμφωνία σε τοπικό επίπεδο.

- Εάν ο τεχνικός σέρβις ενός πελάτη απαιτεί το παρόν εγχειρίδιο σε γλώσσα εκτός των αγγλικών, αποτελεί ευθύνη του πελάτη να παρέχει τις υπηρεσίες μετάφρασης.
- Μην επιχειρήσετε την εκτέλεση εργασιών σέρβις στον εξοπλισμό αν δεν έχετε συμβουλευτεί και κατανοήσει το παρόν εγχειρίδιο σέρβις.
- Αν δεν προσέξετε την προειδοποίηση αυτή, ενδέχεται να προκληθεί τραυματισμός στον τεχνικό σέρβις, στο χειριστή ή στον ασθενή από ηλεκτροπληξία, μηχανικούς ή άλλους κινδύνους.

FIGYELMEZTETÉS
(HU)

Ezen karbantartási kézikönyv kizárólag angol nyelven érhető el, kivéve ha a helyi rendelkezések ezt kifejezetten elő nem írják, illetve ha helyi szinten erről külön megállapodás nem születik.

- Ha a vevő szolgáltatója angoltól eltérő nyelvre tart igényt, akkor a vevő felelőssége a fordítás elkészíttetése.
- Ne próbálja elkezdeni használni a berendezést, amíg a karbantartási kézikönyvben leírtakat nem értelmezték.
- Ezen figyelmeztetés figyelmen kívül hagyása a szolgáltató, működtető vagy a beteg áramütés, mechanikai vagy egyéb veszélyhelyzet miatti sérülését eredményezheti.

AÐVÖRUN
(IS)

Þessi þjónustuhandbók er eingöngu fáanleg á ensku, nema annað sé sérstaklega krafist, löglega eða samþykkt á landsgrundvelli.

- Ef að þjónustuveitandi viðskiptamanns þarfnast annas tungumáls en ensku, er það skylda viðskiptamanns að skaffa tungumálaþjónustu.
- Reynið ekki að afgreiða tækið nema að þessi þjónustuhandbók hefur verið skoðuð og skilin.
- Brot á sinna þessari aðvörun getur leitt til meiðsla á þjónustuveitanda, stjórnanda eða sjúklings frá raflosti, vélrænu eða öðrum áhættum.

AVVERTENZA
(IT)

Il presente manuale di manutenzione è disponibile soltanto in inglese, eccetto quando espressamente richiesto dalle normative locali o convenuto a livello locale.

- Se un addetto alla manutenzione richiede il manuale in una lingua diversa, il cliente è tenuto a provvedere direttamente alla traduzione.
- Procedere alla manutenzione dell'apparecchiatura solo dopo aver consultato il presente manuale ed averne compreso il contenuto.
- Il mancato rispetto della presente avvertenza potrebbe causare lesioni all'addetto alla manutenzione, all'operatore o ai pazienti provocate da scosse elettriche, urti meccanici o altri rischi.

警告
(JA)

このサービスマニュアルには英語版しかありません。ただし使用国の法令に別異の定めがある、あるいは現地で別段の合意がある場合を除きます。

- サービスを担当される業者が英語以外の言語を要求される場合、翻訳作業はその業者の責任で行うものとさせていただきます。
- このサービスマニュアルを熟読し理解せずに、装置のサービスを行わないでください。
- この警告に従わない場合、サービスを担当される方、操作員あるいは患者さんが、感電や機械的又はその他の危険により負傷する可能性があります。

경고
(KO)

현지 법률에 따라 명시적으로 요구하거나 현지 수준에서 합의한 경우를 제외하고 본 서비스 매뉴얼은 영어로만 이용하실 수 있습니다.

- 고객의 서비스 제공자가 영어 이외의 언어를 요구할 경우, 번역 서비스를 제공하는 것은 고객의 책임입니다.
- 본 서비스 매뉴얼을 참조하여 숙지하지 않은 이상 해당 장비를 수리하려고 시도하지 마십시오.
- 본 경고 사항에 유의하지 않으면 전기 쇼크, 기계적 위험, 또는 기타 위험으로 인해 서비스 제공자, 사용자 또는 환자에게 부상을 입힐 수 있습니다.

BRĪDINĀJUMS
(LV)

Šī apkalpes rokasgrāmata ir pieejama tikai angļu valodā, izņemot gadījumus, kad vietējie likumi nepārprotami nosaka citādi vai panākta vienošanās vietējā līmenī.

- Ja klienta apkalpes sniedzējam nepieciešama informācija citā valodā, nevis angļu, klienta pienākums ir nodrošināt tulkošanu.
- Neveiciet aprīkojuma apkalpi bez apkalpes rokasgrāmatas izlasīšanas un saprašanas.
- Šī brīdinājuma neievērošana var radīt elektriskās strāvas trieciena, mehānisku vai citu risku izraisītu traumu apkalpes sniedzējam, operatoram vai pacientam.

ĮSPĖJIMAS
(LT)

Šis eksploatavimo vadovas yra tik anglų kalba, išskyrus tuos atvejus, kai vietiniai įstatymai tiesiogiai numato kitokius reikalavimus arba vietiniu lygiu sutarta kitaip.

- Jei kliento paslaugų tiekėjas reikalauja vadovo kita kalba – ne anglų, suteikti vertimo paslaugas privalo klientas.
- Nemėginkite atlikti įrangos techninės priežiūros, jei neperskaitėte ar nesupratote šio eksploatavimo vadovo.
- Jei nepaisysite šio įspėjimo, galimi paslaugų tiekėjo, operatoriaus ar paciento sužalojimai dėl elektros šoko, mechaninių ar kitų pavojų.

ADVARSEL
(NO)

Denne servicehåndboken finnes bare på engelsk, bortsett fra dersom det motsatte uttrykkelig er fastsatt av lokal lovgivning eller det er inngått annen avtale lokalt.

- Hvis kundens serviceleverandør trenger et annet språk, er det kundens ansvar å sørge for oversettelse.
- Ikke forsøk å reparere utstyret uten at denne servicehåndboken er lest og forstått.
- Manglende hensyn til denne advarselen kan føre til at serviceleverandøren, operatøren eller pasienten skades på grunn av elektrisk støt, mekaniske eller andre farer.

OSTRZEŻENIE
(PL)

Niniejszy podręcznik serwisowy dostępny jest jedynie w języku angielskim, chyba że lokalne przepisy lub umowy wyraźnie stanowią inaczej.

- Jeśli dostawca usług klienta wymaga języka innego niż angielski, zapewnienie usługi tłumaczenia jest obowiązkiem klienta.
- Nie próbować serwisować wyposażenia bez zapoznania się z niniejszym podręcznikiem serwisowym i zrozumienia go.
- Niezastosowanie się do tego ostrzeżenia może spowodować urazy dostawcy usług, operatora lub pacjenta w wyniku porażenia prądem elektrycznym, zagrożenia mechanicznego bądź innego.

ATENȚIE
(RO)

Acest manual de service este disponibil numai în limba engleză, cu excepția cazului în care este o cerință obligatorie stipulată de legislația națională sau convenită la nivel local.

- Dacă un furnizor de servicii pentru clienți necesită o altă limbă decât cea engleză, este de datoria clientului să furnizeze o traducere.
- Nu încercați să reparați echipamentul decât ulterior consultării şi înțelegerii acestui manual de service.
- Ignorarea acestui avertisment ar putea duce la rănirea depanatorului, operatorului sau pacientului în urma pericolelor de electrocutare, mecanice sau de altă natură.

ОСТОРОЖНО!
(RU)

Данное руководство по техническому обслуживанию предлагается только на английском языке, за исключением тех случаев, когда наличие руководства на национальном языке является требованием местного законодательства или когда выпуск такого руководства согласован с местным представительством.

- Если сервисному персоналу клиента необходимо руководство не на английском, а на каком-то другом языке, клиенту следует самостоятельно обеспечить перевод.
- Перед техническим обслуживанием оборудования обязательно обратитесь к данному руководству и поймите изложенные в нем сведения.
- Несоблюдение требований данного предупреждения может привести к тому, что специалист по техобслуживанию, оператор или пациент получит удар электрическим током, механическую травму или другое повреждение.

UPOZORNENIE
(SK)

Tento návod na obsluhu je k dispozícii len v angličtine, okrem prípadov, kedy tak výslovne vyžadujú miestne zákony alebo je dohodnuté na miestnej úrovni.

- Ak zákazníkov poskytovateľ služieb vyžaduje iný jazyk ako angličtinu, poskytnutie prekladateľských služieb je zodpovednosťou zákazníka.
- Nepokúšajte sa o obsluhu zariadenia, kým si neprečítate návod na obluhu a neporozumiete mu.
- Zanedbanie tohto upozornenia môže spôsobiť zranenie poskytovateľa služieb, obsluhujúcej osoby alebo pacienta elektrickým prúdom, mechanické alebo iné ohrozenie.

ATENCION
(ES)

Este manual de servicio sólo existe en inglés, salvo que la legislación local exija de forma expresa lo contrario, o así se haya acordado a nivel local.

- Si el encargado de mantenimiento de un cliente necesita un idioma que no sea el inglés, el cliente deberá encargarse de la traducción del manual.
- No se deberá dar servicio técnico al equipo, sin haber consultado y comprendido este manual de servicio.
- La no observancia del presente aviso puede dar lugar a que el proveedor de servicios, el operador o el paciente sufran lesiones provocadas por causas eléctricas, mecánicas o de otra naturaleza.

VARNING

(SV)

Den här servicehandboken finns bara tillgänglig på engelska om inte annat uttryckligen krävs av lokal lag eller har överenskommits på lokal nivå.

- Om en kunds servicetekniker har behov av ett annat språk än engelska, ansvarar kunden för att tillhandahålla översättningstjänster.
- Försök inte utföra service på utrustningen om du inte har läst och förstår den här servicehandboken.
- Om du inte tar hänsyn till den här varningen kan det resultera i skador på serviceteknikern, operatören eller patienten till följd av elektriska stötar, mekaniska faror eller andra faror.

DİKKAT

(TR)

Aksi, yerel bir yasa tarafından açıkça gerekli görülmediği veya yerel bir seviyede kabul edilmediği takdirde, bu servis kilavuzunun sadece ingilizcesi mevcuttur.

- Eğer müşteri teknisyeni bu kılavuzu ingilizce dışında bir başka lisandan talep ederse, bunu tercüme ettirmek müşteriye düşer.
- Servis kılavuzunu okuyup anlamadan ekipmanlara müdahale etmeyiniz.
- Bu uyarıya uyulmaması, elektrik, mekanik veya diğer tehlikelerden dolayı teknisyen, operatör veya hastanın yaralanmasına yol açabilir.

AVISO

(PT-BR)

Este manual de assistência técnica encontra-se disponível unicamente em inglês, salvo disposições em contrário previstas pela legislação local ou acordadas no âmbito local.

- Se outro serviço de assistência técnica solicitar a tradução deste manual, caberá ao cliente fornecer os serviços de tradução.
- Não tente reparar o equipamento sem ter consultado e compreendido este manual de assistência técnica.
- A não observância deste aviso pode ocasionar ferimentos no técnico, operador ou paciente decorrentes de choques elétricos, mecânicos ou outros.

ATENÇÃO
(PT-PT)

Este manual de assistência técnica só se encontra disponível em inglês, salvo requisição expressa pela legislação local ou acordo efectuado a nível local.

- Se qualquer outro serviço de assistência técnica solicitar este manual noutro idioma, é da responsabilidade do cliente fornecer os serviços de tradução.
- Não tente reparar o equipamento sem ter consultado e compreendido este manual de assistência técnica.
- O não cumprimento deste aviso pode colocar em perigo a segurança do técnico, do operador ou do paciente devido a choques eléctricos, mecânicos ou outros.

UPOZORENJE
(SR)

Ovo servisno uputstvo je dostupno samo na engleskom jeziku, sem ako lokalni zakon to izričito zahteva ili je dogovoreno na lokalnom nivou.

- Ako klijentov serviser zahteva neki drugi jezik, klijent je dužan da obezbedi prevodilačke usluge.
- Ne pokušavajte da opravite uređaj ako niste pročitali i razumeli ovo servisno uputstvo.
- Zanemarivanje ovog upozorenja može dovesti do povređivanja servisera, rukovaoca ili pacijenta usled strujnog udara ili mehaničkih i drugih opasnosti.

UPOZORENJE
(HR)

Ovaj servisni priručnik dostupan je na engleskom jeziku.

- Ako davatelj usluge klijenta treba neki drugi jezik, klijent je dužan osigurati prijevod.
- Ne pokušavajte servisirati opremu ako niste u potpunosti pročitali i razumjeli ovaj servisni priručnik.
- Zanemarite li ovo upozorenje, može doći do ozljede davatelja usluge, operatera ili pacijenta uslijed strujnog udara, mehaničkih ili drugih rizika.

警告
(ZH-TW)

本維修手冊僅有英文版。

- 若客戶的維修廠商需要英文版以外的語言，應由客戶自行提供翻譯服務。
- 請勿試圖維修本設備，除非 您已查閱並瞭解本維修手冊。
- 若未留意本警告，可能導致維修廠商、操作員或病患因觸電、機械或其他危險而受傷。

警告
(ZH-HK)

本服務手冊僅提供英文版本。

- 倘若客戶的服務供應商需要英文以外之服務手冊，客戶有責任提供翻譯服務。
- 除非已參閱本服務手冊及明白其內容，否則切勿嘗試維修設備。
- 不遵從本警告或會令服務供應商、網絡供應商或病人受到觸電、機械性或其他的危險。

OPOZORILO
(SL)

Ta servisni priročnik je na voljo samo v angleškem jeziku.

- Če ponudnik storitve stranke potrebuje priročnik v drugem jeziku, mora stranka zagotoviti prevod.
- Ne poskušajte servisirati opreme, če tega priročnika niste v celoti prebrali in razumeli.
- Če tega opozorila ne upoštevate, se lahko zaradi električnega udara, mehanskih ali drugih nevarnosti poškoduje ponudnik storitev, operater ali bolnik.

This page left intentionally blank.

Revision History

Part/Rev	Date	Reason for Change	Pages
5177951-4-1EN rev 1	25 March, 2010	Initial release of 5177951-4-1EN.	252

This page left intentionally blank.

Table of Contents

Chapter 1 INTRODUCTION....25

1 Object and Scope of this manual....25

2 Responsibilities of the Purchaser/Customer....26

3 Pre-Installation Process....27

Chapter 2 INNOVA SYSTEM....29

1 Description of the System....29

1.1 Innova LC/LP positioner....29

1.2 Innova Patient table....29

1.3 X–Ray generator....30

1.4 X–Ray head....30

1.5 Innova Imaging System....31

1.6 Monitor suspensions....31

1.7 DL and associated devices....31

1.8 AW workstation option....32

1.9 CENTRICITY CA1000 option....32

1.10 Injectors....32

1.11 Fluoro UPS (Option)....32

1.12 Touch Screen....35

1.13 IntraVascular UltraSound (IVUS) Option....35

1.13.1 Application....35

1.13.2 Purpose....35

1.13.3 Product Description....35

2 Innova LC/LP Product Identification....37

2.1 Innova LC/LP Basic Product....37

2.2 C1 Frontal Cabinet and C1 Lateral Cabinet....39

2.3 C2 LC/LP Cabinet....40

2.4 Omega Patient Table....41

2.5 Tilt Patient Table....41

2.6 User Interface....42

2.7 Fluoro UPS (option)....43
2.8 3kVA Cabinets UPS....45
2.9 X–Ray Tube Chiller....46
2.10 Digital Detector Conditioner....46
2.11 Innova User Area....47
2.12 IVUS Option....48
3 System Compatibility....50
3.1 System Compatibility Cross–Reference – Innova LC/LP Positioner/Table Sub-System. 50
3.2 System Compatibilities Cross–Reference – Tables Sub-System....50
3.3 System Compatibilities Cross–Reference – Jedi X–Ray Generator Sub-System....50
3.4 System Compatibility Cross–Reference – X–Ray Head Sub–System....50
3.5 System Compatibility Cross–Reference – Innova LC/LP Imaging and X–Ray Control Sub-System....50
3.6 System Compatibility Cross–Reference – Monitor Support & Suspension Sub–System 51
3.7 System Compatibilities Cross–Reference – 18” & 19” LCD Monitors Sub–System....51

Chapter 3 PHYSICAL REQUIREMENTS OF ROOM....53
1 Presentation of the 3 Rooms....53
1.1 Examination room....53
1.2 Technical room....53
1.3 Control room....53
2 Environmental Requirements/Limitations....54
2.1 Room Climate....54
2.1.1 Relative Humidity and Temperature....55
2.1.2 Altitude and Atmospheric Pressure....55
2.2 Equipment Heat Output (Dissipation)....56
2.2.1 Standard System....56
2.2.2 Fluoro UPS Option....58
2.2.3 IVUS Option....59
2.2.3.1 Environmental Limitations in Use (room climate)....59
2.2.3.2 Heat Output....59

2.3 IEC60601–1–2 Electromagnetic Standard Compliance & Documentation.....59
2.3.1 General Scope.....59
2.3.2 Electromagnetic Emission.....60
2.3.3 Electromagnetic Immunity.....60
2.3.3.1 Electromagnetic Immunity.....60
2.3.3.2 Electromagnetic Immunity IEC 60601–1–2.....61
2.3.3.3 Recommended Separation Distances for Portable and Mobile RF Communications Equipment IEC 60601–1–2.....62
2.3.4 Limitations Management.....63
2.3.5 Use Limitation.....63
2.3.6 Installations Requirements & Environment Control.....64
2.4 Radiation Protection.....65
2.5 Audible noise.....65
2.6 Windows and curtains.....65
3 Structural Requirements.....66
3.1 Room Size.....66
3.2 Elevator and Door Size Requirements.....66
3.2.1 Door Height.....66
3.2.2 Door Width.....66
3.2.3 Elevator Depth.....66
3.3 Floor.....66
3.3.1 General Vascular GE Healthcare Policy.....66
3.3.2 Floor requirements when using provided floor anchors.....67
3.3.3 Pan Type Floor Construction Requirement.....67
3.3.4 Hole dimension and preferred location in concrete floor.....69
3.3.5 Water Pipe Requirements.....71
3.3.6 Seismic areas.....74
3.4 Ceiling.....74
3.4.1 LP4 rails.....74
3.4.2 Monitor Suspension Rails.....78
3.4.2.1 Reference.....78

3.4.2.2 Rail Mounting....78
3.4.2.3 Bolt Specifications....78
3.4.2.4 Rails selection....78
3.5 Walls....78
3.5.1 General requirement....78
3.5.2 Seismic Areas....78
4 Functional Requirements....79
4.1 Electrical Requirements....79
4.1.1 Optional Isolation transformer specifications....80
4.2 Room Speaker....81
4.3 Room Lighting....81
5 Emergency....83
5.1 Main power supply cut....83
5.2 System failure....83
6 Insite....84

Chapter 4 ROOM LAYOUTS....85
1 Room Layout Considerations....85
1.1 Service Access....85
1.2 Clinical Access....85
1.3 Peripheral Equipment....85
1.4 Emergency Stop....85
1.5 Patient Environment Equipment....86
1.6 Recommended Room Lighting....86
1.7 Preference Cabinet locations....87
1.8 Layout Constraints....88
2 Room Layout Drawings....91
3 IVUS Option Room Layout....94

Chapter 5 PHYSICAL CHARACTERISTICS....97
1 Dimension Drawings....97
2 Mounting Requirements....124

2.1 Floor Loading and Recommended Mounting Methods....124
2.2 Positioner and Table Floor Mounting....126
2.3 Innova LC Positioner and Omega/Tilt Table Floor Preparation Kits (GE Healthcare supplied)....135
2.3.1 2285048 - Base Plate Assembly....136
2.3.2 2360538 – Tilt Table Add–On Kit....137
2.3.3 2285050 – Assembly and separation select kit....138
2.3.3.1 2285051 – Above grade, Floor Anchors without insert (S18101SD)....138
2.3.3.2 2285646 – Through bolts without insert (S18101SH)....138
2.3.3.3 2286398 – On grade, Floor anchor (S18101SK)....139
2.3.3.4 2285052 – Above grade, Floor anchor with insert (S18101SE)....139
2.3.3.5 2285053 – Through bolts with insert (S18101SF)....140
2.3.3.6 2285632 – Floor plate / Base plate assembly (S18101SG)....141
2.3.4 2285056 - A/C/N Templates....141
2.4 Injector Mounting Requirements....144

Chapter 6 ELECTRICAL CONNECTIONS....145
1 Power Distribution....145
2 Power Distribution System....147
2.1 Power Distribution Box - CE....147
2.2 Power Distribution Box - UL....150
3 Grounding....153
4 Power and Grounding Recommendations....157
5 IVUS Rev 1 Option....159
5.1 Wiring Diagram....159
5.2 IVUS Floor Conduits....159
5.3 Run Interconnection cables through the Conduit....160
5.4 Electrical Requirements....161
5.5 Ethernet Network Requirement....161
6 IVUS Rev 2 Option....163
6.1 Wiring Diagram....163
6.2 IVUS Floor Conduits....163

6.3 Run Interconnection cables through the Conduit....164
6.4 Electrical Requirements....165
6.5 Ethernet Network Requirement....166
7 X-Ray ON Lamp Distribution....167
8 Ready For X-Ray Lamp....168
9 Room Light Distribution....169
10 Room Speaker....170
11 Door Interlocks....171
12 Emergency....172
12.1 Partial UPS Fluoro (option)....172
12.2 Full UPS Record (compatability)....172
13 Injectors....173
13.1 Remote Injector (rack mount)....173
13.2 Pedestal Injector....173
13.3 Injector L.F. ILLUMINA....173
14 Advantage Windows....174
15 MAC-LAB System EX....175
16 MIS (Master Interconnect System)....176
17 Cable Channeling....177
17.1 General....177
17.2 Conduit....177
17.3 Electrical Ducts....177
18 Physical Runs....180

Chapter 7 ADDITIONAL PLANNING AIDS....187
1 Shipping Information....187
1.1 Product Shipping Information....187
1.2 Detail of Innova Shipping Information....188
1.2.1 Innova LC Positioner Gantry On Shipping Dolly....188
1.2.2 Innova LC Positioner Air Shipment....189
1.2.3 Innova LP4 Positioner Gantry On Shipping Dolly (Longer and shorter dollies)....190

1.2.4 Innova LP4 Positioner Stationary Rails Packaging....192
1.2.5 Innova C1 Frontal, C1 Lateral, and C2 LC/LP Cabinets....193
1.2.6 Omega Shipment....194
1.2.7 Power Distribution Box (PDB) CE....195
1.2.8 Power Distribution Box (PDB) UL....195
1.2.9 Other Elements Package....196
2 Tools and Test Equipment....197
3 Route Survey....199
3.1 Step One — Sketch....199
3.2 Step Two — Survey....199
3.3 Step Three — Check....199
4 European Process Order Select....201
5 Pre-Installation Checklist....202

Chapter 8 IP ADDRESSING PROCESS....205
1 IP Addressing Process....205

Chapter 9 SEISMIC CALCULATIONS....207
1 Overview....207
2 Calculations....208
2.1 C1 Frontal Cabinet....209
2.2 C1 Lateral Cabinet....210
2.3 C2 LC/LP Cabinet....211
2.4 Coolix 4000 Chiller....212
2.5 Thermocon Detector Chiller....214
2.6 Fluoro UPS CE Cabinet....216
2.7 Fluoro UPS UL Cabinet....218
2.8 3 kVA Cabinet UPS - model 9125....220
2.9 3 kVA Cabinet UPS - model 9130....222
2.10 LC Positioner....224
2.11 LP4 Positioner....228
2.12 Main Disconnect Panel (PDB - CE)....230

2.13 Main Disconnect Panel (PDB - UL).....232
2.14 Omega IV Table.....234
2.15 Omega V Long Table with Baseplate.....238
2.16 Omega V Long Table.....242
2.17 Overhead Flat Panel Suspension – Ceiling mounted.....246
2.18 8 Monitor Flat panel Suspension - Ceiling Mounted.....248

Chapter 1 Introduction

1 Object and Scope of this manual

This document is intended as a guide and information resource to properly plan and prepare a site for the installation of an Innova system.

In addition, this document provides references to the pre–installation documents of the various product included with an Innova System.

These documents are intended to assist the Installation Specialist and the Site Planner in properly preparing a site for the installation of this system.

It provides pre–installation data, such as site preparation prior to the delivery of the Innova System, environmental and electrical requirements and some additional planning aids.

WARNING

MAKE SURE THE ROOM PREPARATION COMPLIES WITH LOCAL REGULATIONS AS THE PIM IS NOT INTENDED TO REFLECT ALL OF THEM

2 Responsibilities of the Purchaser/Customer

To ensure that the installation of an Innova System meets the purchaser or customer expectations, it is important to determine who will take responsibility for the various items during the system installation process. To help you in determining these responsibilities, review the following checklists with the customer and assign responsibilities as appropriate:

- Tool and Test Equipment (Chapter 7, Tools and Test Equipment)
- Pre–Installation Checklist (Chapter 7, Pre-Installation Checklist)

Contract Changes:

Be sure to inform the customer that the cost of any alteration or modification not specified in the sales contract are liable to the customer.

The following GE-supplied equipment must be installed by the Hospital's Contractors, per room drawings:

- PDB (Electrical Power Distribution Box or *Main Disconnect Panel*)
- LC Gantry & Table baseplate hole drilling (Per supplied template)
- LP4 Suspension stationary rails (centered on LC Gantry/table floor template)
- LCD Monitor suspension stationary rails
- LP4 cable drape rail(s)
- LC Gantry baseplate grout
- LC Gantry baseplate
- Omega/Tilt table common baseplate (if applicable)

3 Pre-Installation Process

Complete the checklists in *ROOM LAYOUTS*, *ELECTRICAL CONNECTIONS*, and *ADDITIONAL PLANNING AIDS* of this manual. They represent an important part of the pre–installation process. The checklists summarize the required preparations and allow to verify the proper completion of the pre–installation procedures.

You will find hereafter a chart of the information flow in the pre-installation process.

Illustration 1-1:

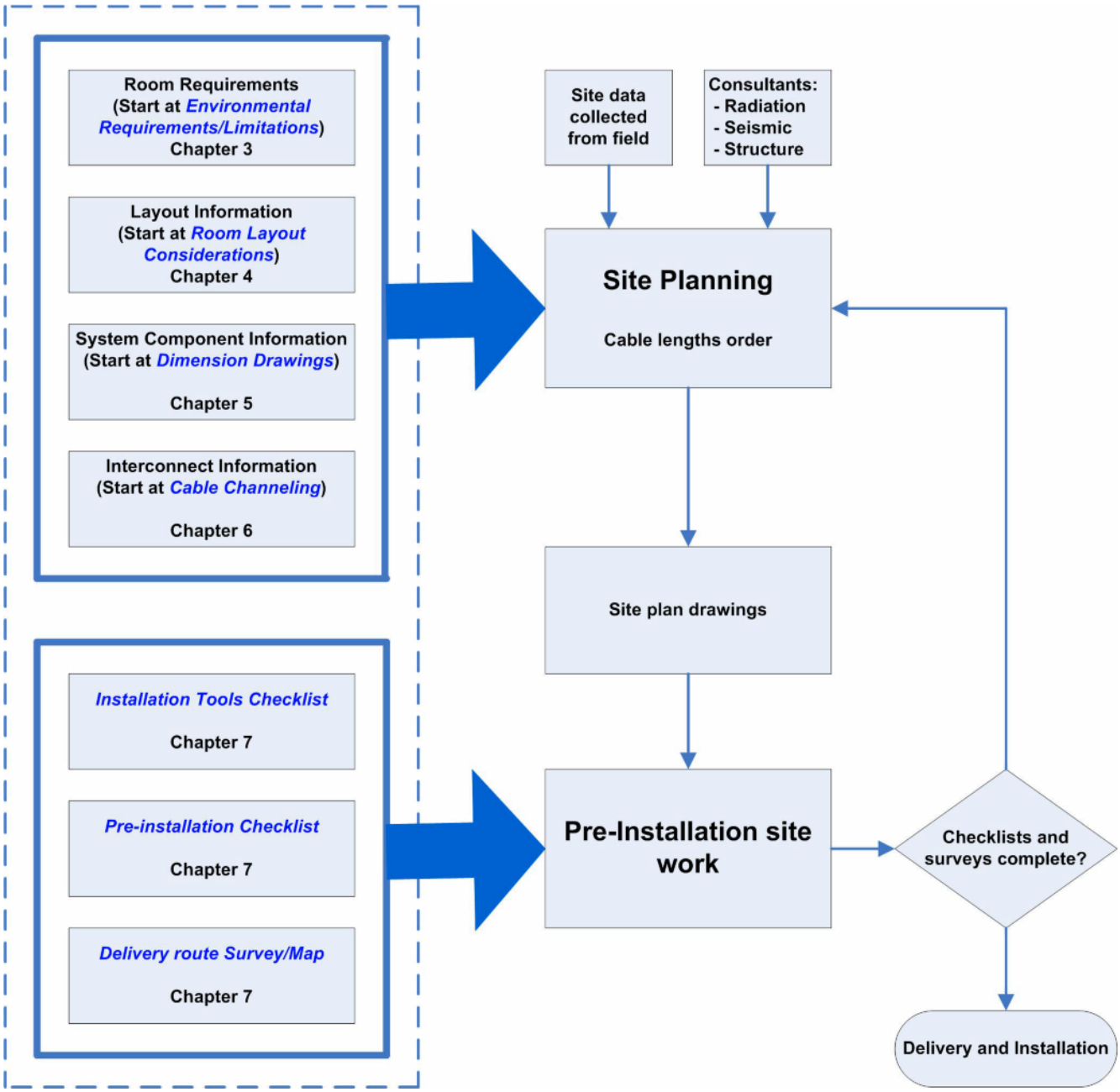

This page left intentionally blank.

Chapter 2 Innova System

1 Description of the System

1.1 Innova LC/LP positioner

A complete Innova LC/LP positioner comprises:

- LC positioner including an X–ray tube housing with a collimator and a Revolution Digital Detector
- LP4 positioner including an X–ray tube housing with a collimator and a Revolution Digital Detector
- Two C1 cabinets including X–Ray Generator and Digital Imaging System
- One C2 LC/LP cabinet including positioners control
- One or two multi-axis control boxes

1.2 Innova Patient table

Innova Systems can be supplied with an Omega table, which includes a table side control with Contour Filter.

Illustration 2-1:

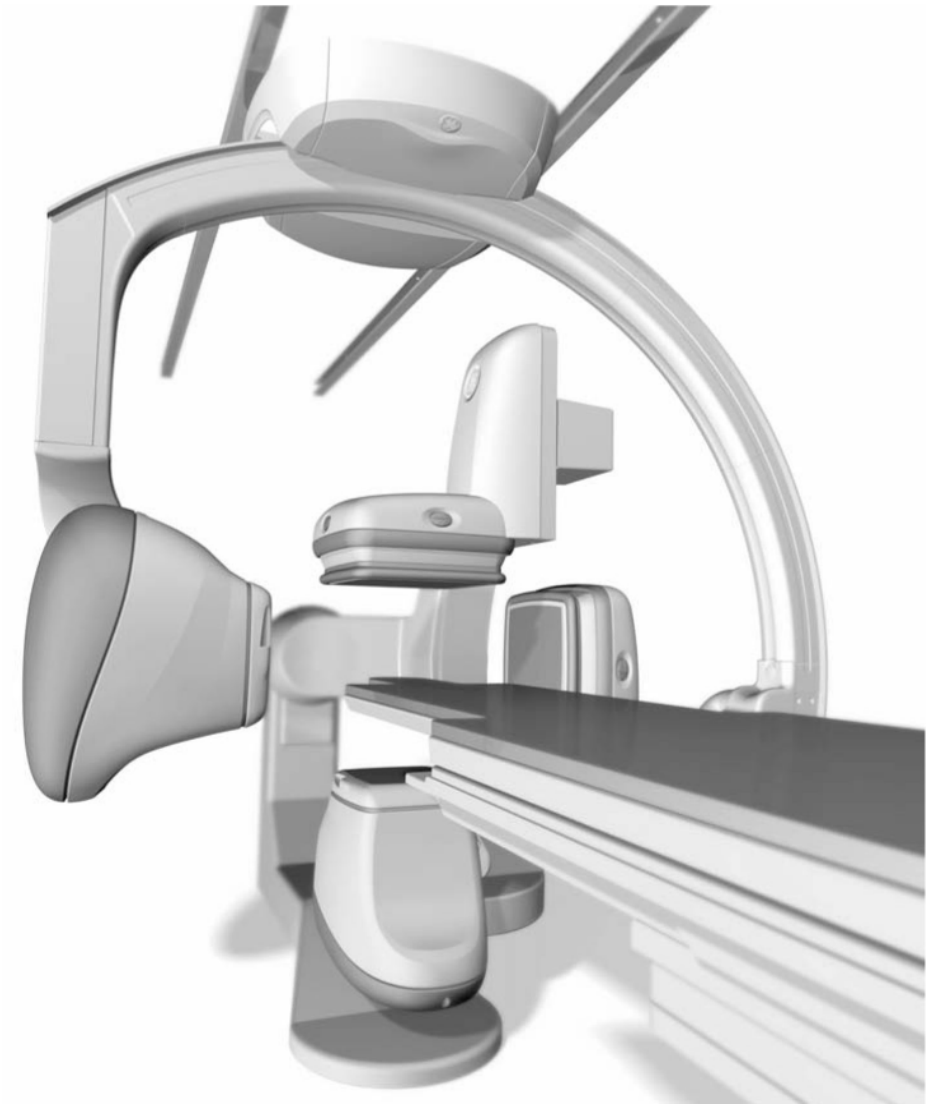

1.3 X–Ray generator

The Innova System uses two Innova High Voltage Generator System with component parts as follows according to the power requested (100 kW):

- Two Jedi – C1 Frontal and C1 Lateral cabinets,
- Two Ingrid H.V. tank mounted on the Ulysses X–Ray tube housing.
- Two External recirculating chillers (mandatory for each tube). It is mandatory to place the two Chillers in the Technical Room.

1.4 X–Ray head

The Innova System uses two Ulysses X–Ray tube housing including an X–Ray tube, a collimator, Ingrid HV tank, oil/water exchanger, contour filter, etc.

1.5 Innova Imaging System

An Innova LC/LP System is managed and controlled by a System including:

- Two C1 cabinets, inside which are located the RTAC, the DL, (DL in frontal C1 cabinet only), the modem, the HUB, the KVM,
- C2 LC/LP positioners control cabinet,
- VCIM console,
- Revolution Digital Detector mounted on Innova LC positioner,
- Revolution Digital Detector mounted on Innova LP4 positioner,
- Two external Digital Detector conditioners are mandatory.
- A 3kVA cabinet UPS to be installed close to PDB (Main Disconnect Panel) whether the Fluoro UPS option is installed or not.
- LCD NEC 19” 1980 SXi Color Monitor.
- LCD 19” EIZO GmbH SMD 19100G Color Monitor.
- LCD 18” EIZO GmbH (formerly SIEMENS) SMD 18101G B&W Monitor.
- LCD 19” EIZO GmbH SMD 19100G B&W Monitor.

1.6 Monitor suspensions

The common type of this suspension is an XT inboard monitor bridge.

A monitor frame support receiving 6 monitors: 4 B&W Monitor and 2 Color Monitor.

A monitor frame support receiving 8 monitors: 4 B&W Monitor and 4 Color Monitor or 6 B&W Monitor and 2 Color Monitor.

In the Control Area, a Gyro TV® wall mount can support the optional 48 cm (19") LCD monitors.

1.7 DL and associated devices

An Innova System uses the DL Digital Imaging system.

- The C1 Frontal Cabinet contains:
  - DL Computer,
  - Modem,
  - Firewall unit,
  - Ethernet switch,
  - KVM–local,
  - Video Splitter.
- The user area is made of:
  - DL color LCD monitor (19”),
  - Keyboard,
  - Mouse,
  - Keypads for user dialogue,
  - Repeater monitors.

1.8 AW workstation option

AW workstation option is composed of a workstation, 1 or 2 monitors 19'' flat panel in the Control Room and 1 monitor (flat panel) fixed on suspension (option) and 1 video switcher. Check Innova Installation Service Manual (JobCard *IST0093 - Advantage Window Installation (AW and Video Splitter)* for switcher installation.

1.9 CENTRICITY CA1000 option

Refer to :*Centricity Cardiology CA 1000 V2.0 Preinstallation Guide DOC0241470* in the OEMs of the Innova 2121-IQ/3131-IQ service manual.

1.10 Injectors

The recommended injectors are:

- ILLUMINA (pedestal),
- ACIST E2000 Voyager (pedestal)
- ACIST CVI (Pedestal and Table mount)
- Mark V ProVis (pedestal or rack mounted)
- MEDRAD AVANTA (Pedestal and Table mount)

Other injectors (remote or pedestal) require S.O.I..

1.11 Fluoro UPS (Option)

The Innova LC/LP system can be protected with an optional Fluoro UPS.

There are two types of Fluoro UPS:

- UL for North America and other 480V – 60Hz countries.
- CE for Asia and Europe

⚠WARNING

DO NOT CONNECT THE UPS BATTERIES PRIOR THE COMMISSIONING OF THE UPS (INITIAL POWER UP).

NOTICE

General safety instructions

- Move the UPS in an upright position in its original package to the final destination room.
  To lift the cabinets, use a forklift or lifting belts with spreader bars.
- Check for sufficient floor and elevator loading capacity.
- Check the integrity of the UPS equipment carefully.
- If you notice visible damage, do not install or start the UPS. Contact the nearest Service Center immediately.
  WARNING! RISK OF ELECTRICAL SHOCK: Do not remove covers; there are no user serviceable parts inside.
- All installation, maintenance and service work should be performed by qualified service personnel.
  The UPS contains its own energy source (battery).
- The field–wiring terminals may be electrically live, even when the UPS is disconnected from the utility.
- Dangerous voltages may be present during battery operation. The battery must be disconnected during maintenance or service work.
- This UPS contains potentially hazardous voltages.
- Be aware that the inverter can restart automatically after the utility voltage is restored.

NOTICE

Installation safety instructions:

- Contractor responsibility:
  - Electrical contractor is responsible for providing and connecting the cables and configuring the PDB in by-pass mode.
  - GEHC is responsible for powering on the system with the UPS in by-pass mode.
  - GEDE is responsible for UPS comissioning.
- After removing the sidewalls of the UPS, make sure that all earth connections when reassembling, are correctly reattached.
- This UPS is intended for use in a controlled indoor environment free of conductive contaminants and protected against animals intrusion.
- HIGH GROUND LEAKAGE CURRENT: Ground connection is essential before connecting to AC input!
  For Europe only, if a differential breaker is placed on the hospital main supply, upstream the PDB, the differential shall be set to 300 mA.
- Switching OFF the unit does not isolate the UPS from the utility.
- Do not install the UPS in an excessively humid environment or near water.
- Avoid spilling liquids on or dropping any foreign object into the UPS.
- The unit must be placed in a sufficiently ventilated area; the ambient temperature should not exceed 104°F (40°C).
- Optimal battery life time is obtained if the ambient temperature does not exceed 77°F (25°C).
- It is important that air can move freely around and through the unit. Do not block the air vents.
- Avoid locations in direct sunlight or near heat sources.
- Check local regulations for UPS installation.

NOTICE

Storage safety instructions:

- Store the UPS in a dry location; storage temperature must be within –13°F (–25°C) to 131°F (55°C).
- If the unit is stored for a period exceeding 3 months, the battery must be recharged periodically (time depending on storage temperature).

NOTICE

Battery safety instructions:

- The battery–voltage is dangerous for person’s safety.
- Never dispose of battery in a fire: They may explode.
- Do not open or mutilate battery: Their contents (electrolyte) may be extremely toxic.
  If exposed to electrolyte, wash immediately with plenty of water.
- Avoid charging in a sealed container.

1.12 Touch Screen

The Innova LC/LP system contains an InnovaCentral Touch Screen.

1.13 IntraVascular UltraSound (IVUS) Option

1.13.1 Application

Applies to : Innova 2121-IQ/3131-IQ

System		MUST Code
Innova 2121 Angio	INN2121A	XVA212
Innova 2121 Cardio	INN2121C	XCA212
Innova 3131 Angio	INN3131A	XVA311
Innova 3131 Cardio	INN3131C	XCA311

1.13.2 Purpose

Provide site preparation knowledge to the Field Engineers for the Volcano IVUSs5i and s5i/GE equipment integration to Innova systems.

NOTE: If the preinstallation preparation is an IB update, go to IST Job Card *s5i / s5iGE Mechanical Installation* .

Volcano is a manufacturer of IntraVascular UltraSound systems, which are used in the cath lab. GE has a strategic agreement with Volcano. GE will be selling and servicing some of the Volcano products.

1.13.3 Product Description

The Volcano IVUS s5i and s5i/GE systems are dedicated equipments for IntraVascular UltraSound imaging, designed as add on equipment to Vascular Imaging systems. The IVUS s5i/GE equipment is also capable of recieving patient data from the Innova system.

The Volcano IVUS rev 1 Hardware configuration consists of:

- A computer (IVUS CPU) connected to a monitor (IVUS Monitor), both located in the Control Room,
- A Patient Interface Module (IVUS PIM) located in the Procedures Room
- Various user interface units to control the system
  - IVUS Control Station,
  - IVUS Joystick,
  - IVUS Keyboard & mouse pad installed in the Control Room,
- Optional Image Printer, located in the Control Room is available for the IVUS system

The IVUS integration to Innova, involves further components :

- Innova Central (Touchscreen) as optional control station,
- Video Signal Switch to route Workstation and IVUS video signals,
- Procedures Room monitor shared by Workstation (AW or Ca1000) and IVUS operations,
- Network cable (IVUS to Innova system),

- Grounding cable (IVUS CPU to Patient Table ground bar),

The s5i/GE rev 1 is used with phased array catheter provided by Volcano (Eagle Eye Gold catheter).

The s5i/GE rev 2 includes a new PIM for rotational catheter and another one for FFR capabilities.

The s5i/GE rev 2 release is based on

- S5x platform
- 3.0.2 software release

The new s5x platform introduces 2 new components:

- A new IVUS catheter type (rotational catheter) in addition to the current one (phased array catheter):
  The same Graphical User Interface and application will be used for both catheter types, the user only needs to plug the desired Patient Interface Module and insert a corresponding catheter type to be able to start imaging.
- A new application (FFR):
  It is a new diagnostic method, the so-called FFR™ (Fractional Flow Reserve) mode which serves as a blood pressure measurement device in the vascular veins. In this mode the Volcano s5x device can measure the difference between the patient's aortic and distal pressure, which result serves as a good decision-helper for the type of treatment.

It also answers some user enhancement requests:

- Introduction of a sealable Patient Interface Module to prevent oxidation of the catheter connector.
- Introduction of a set of cable clamps and a Patient Interface Module's rail hanger with cable strain relief to decrease cable damage.
- Introduction of a new monitor cable type to increase the system reliability.
- Introduction of a new tableside-based TouchPad device to provide an enhanced user interface, focusing mainly on characterization of the vessel wall on the IVUS image.

2 Innova LC/LP Product Identification

2.1 Innova LC/LP Basic Product

The Innova LC/LP positioner system includes C2 LC/LP cabinet, two positioners (frontal and lateral) and TSUI.

Illustration 2-2: LC/LP Product Layout

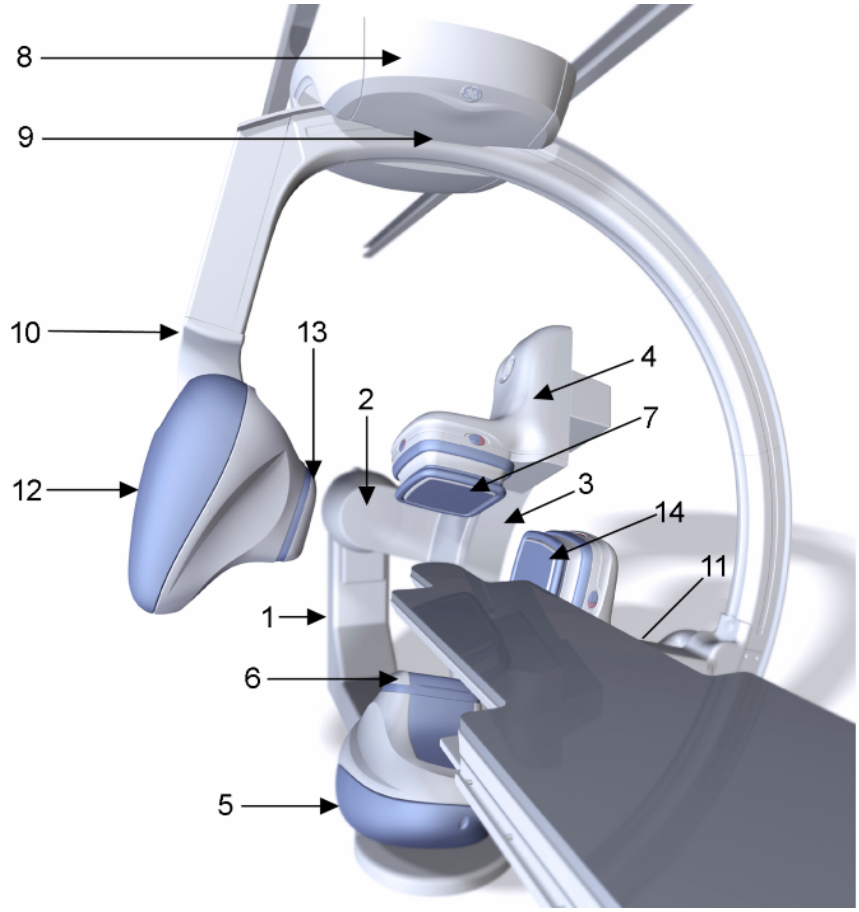

Innova LC/LP positioner including:

- Innova LC Positioner
  - L–arm (Item 1),
  - Pivot (Item 2),
  - C–arc (Item 3),
  - Motorized elevator (Item 4) for the Revolution Digital Detector,
  - X–ray tube (Item 5),
  - Collimator (Item 6),
  - 21 cm Revolution Digital Detector for Innova 2121-IQ (Item 7),
  - 31 cm Revolution Digital Detector for Innova 3131-IQ (Item 7).
- Innova LP4 Positioner
  - Carriage (Item 8),

- Pivot (Item 9),
- C–arc (Item 10),
- Motorized elevator (Item 11) for the Revolution Digital Detector,
- X–ray tube + tube elevator (Item 12),
- Collimator (Item 13),
- 21 cm Revolution Digital Detector for Innova 2121-IQ (Item 14),
- 31 cm Revolution Digital Detector for Innova 3131-IQ (Item 14).

2.2 C1 Frontal Cabinet and C1 Lateral Cabinet

Illustration 2-3: C1 frontal and lateral cabinets

C1 Frontal Cabinet

C1 Lateral Cabinet

2.3 C2 LC/LP Cabinet

Illustration 2-4: C2 LC/LP Cabinet

C2 cabinet

2.4 Omega Patient Table

Illustration 2-5: Omega tables

OMEGA PATIENT TABLE

2.5 Tilt Patient Table

Illustration 2-6: Tilt table

TILT PATIENT TABLE

2.6 User Interface

Illustration 2-7: User interface devices

2.7 Fluoro UPS (option)

Illustration 2-8: UPS - UL

Illustration 2-9: UPS - CE

2.8 3kVA Cabinets UPS

Illustration 2-10: 3 kVA UPS - model 9125

Illustration 2-11: 3 kVA UPS - model 9130

2.9 X–Ray Tube Chiller

Illustration 2-12: Coolix 4000 chillers (Frontal and Lateral)

2.10 Digital Detector Conditioner

Illustration 2-13: Thermo-con chillers (Frontal and Lateral)

2.11 Innova User Area

Illustration 2-14: Innova User Area devices

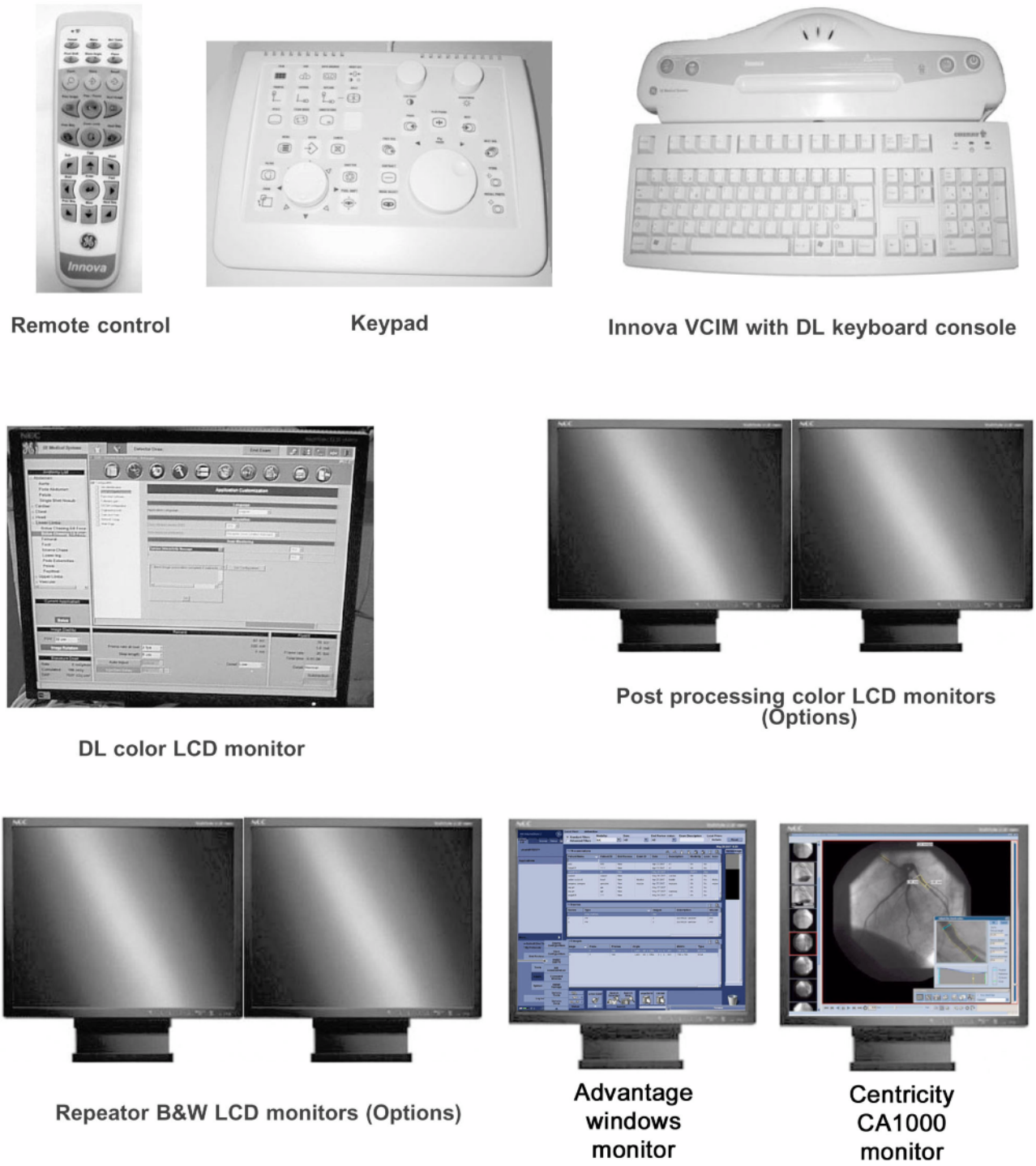

2.12 IVUS Option

Illustration 2-15: IVUS Rev 1 components

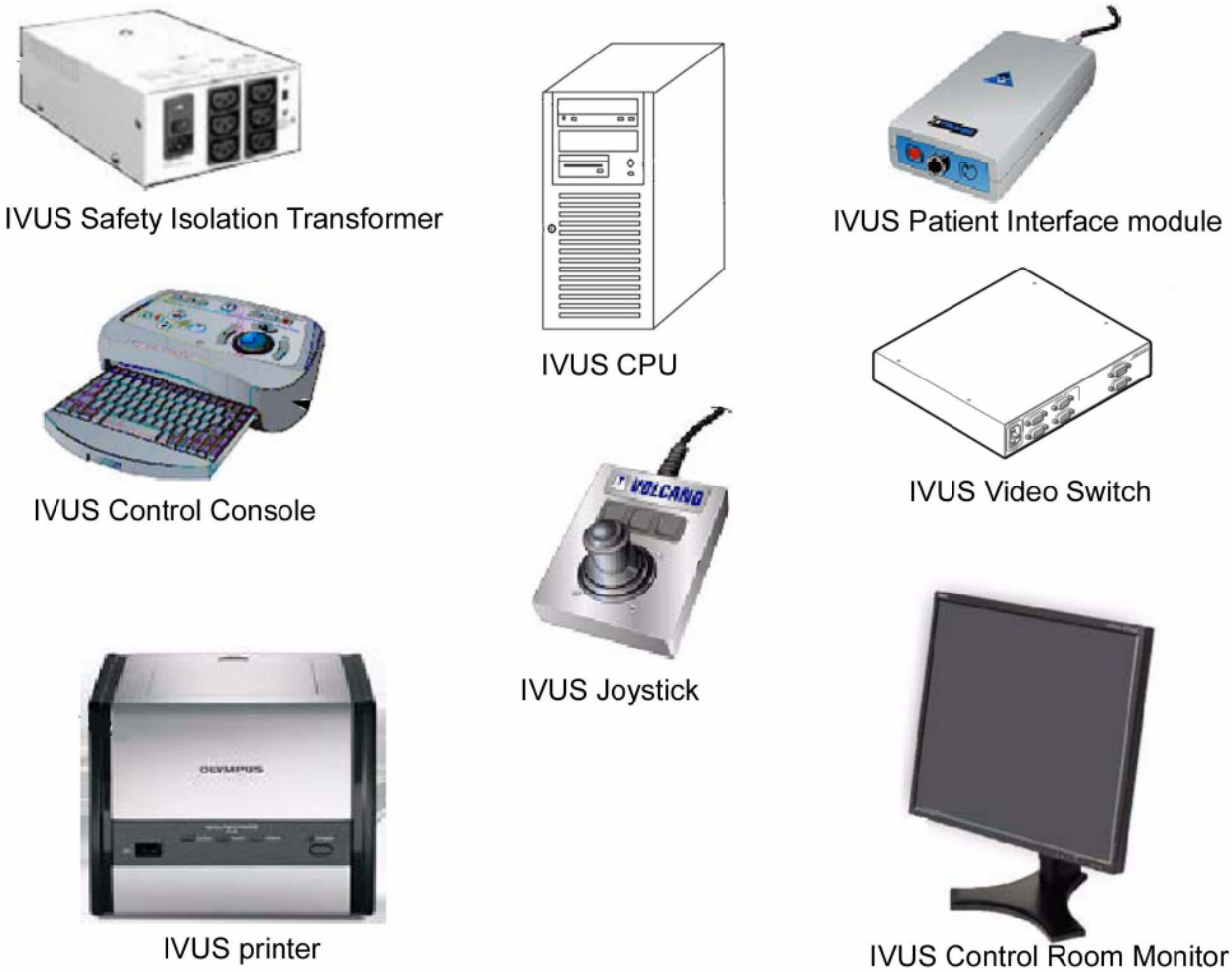

Illustration 2-16: IVUS Rev 2 components

3 System Compatibility

3.1 System Compatibility Cross–Reference – Innova LC/LP Positioner/Table Sub-System

Product Name	Pre-Installation Document Number	Notes
LC Combo Positioner (Innova 3131-IQ)	This document	
LC Cardio Positioner (Innova 2121-IQ)	This document	
LP4 Cardio Positioner	This document	
LP4 Neuro Positioner	This document	
C2 LC/LP Cabinet	This document	
Smart Handle (Innova 2121-IQ)	This document	
Smart Handle + SP (Innova 3131-IQ)	This document	
Smart Box (Innova 2121-IQ)	This document	
Smart Box + Sp (Innova 3131-IQ)	This document	
Bolus Handle	This document	Optional
Innova Central Touchscreen	This document	

3.2 System Compatibilities Cross–Reference – Tables Sub-System

Product Name	Pre-Installation Document Number	Notes
Omega V Long Table	This document	Includes tabletop
Omega IV Table	This document	Includes tabletop

3.3 System Compatibilities Cross–Reference – Jedi X–Ray Generator Sub-System

Product Name	Pre-Installation Document Number	Notes
JEDI 100 VASC	NA	Include in C1 Frontal Cabinet and C1 Lateral Cabinet

3.4 System Compatibility Cross–Reference – X–Ray Head Sub–System

Product Name	Pre-Installation Document Number	Notes
Performix 160 A X-Ray tube	Not applicable	
Cardio collimator	Not applicable	
Angio collimator	Not applicable	
COOLIX 4000 Chiller with RS232	5136189-200	

3.5 System Compatibility Cross–Reference – Innova LC/LP Imaging and X–Ray Control Sub-System

Product Name	Pre-Installation Document Number	Notes
VCIM	NA	
DL Liberty user interface	This document	

Product Name	Pre-Installation Document Number	Notes
C1 Frontal Cabinet	This document	
C1 Lateral Cabinet	This document	
Innova 2121-IQ, 21 cm Revolution Digital detector	This document	
Innova 3131-IQ, 31 cm Revolution Digital detector	This document	
Detector Conditioner Thermo-Con	This document	
3 kVA Cabinets UPS	This document	
Power Distribution Box - CE	This document	
Power Distribution Box - UL	This document	

3.6 System Compatibility Cross–Reference – Monitor Support & Suspension Sub–System

Product Name	Pre-Installation Document Number	Catalog Number
Precabled LCD 6 or 8 Monitor Suspension • Cable Harness 24 M (78 ft, 9 in) • or Cable Harness 36 m (118 ft, 2 in)	2393190–100	

3.7 System Compatibilities Cross–Reference – 18” & 19” LCD Monitors Sub–System

Product Name	Pre-Installation Document Number	Catalog Number
LCD NEC 19” 1990 SXi Color Monitor		
LCD 18” EIZO GmbH (formerly SIEMENS) SMD18101G B&W Monitor	sm 2408074–100	
LCD 19” EIZO GmbH SMD 19100G Color Monitor	sm 5219983–100	
LCD 19” EIZO GmbH SMD 19100G B&W Monitor	sm 5219983–100	

This page left intentionally blank.

Chapter 3 Physical Requirements of room

1 Presentation of the 3 Rooms

1.1 Examination room

- Innova LC Positioner
- Innova LP4 Positioner
- Omega Patient Table
- Performix X–Ray Tube Assembly (x 2)
- Collimator (x 2)
- Innova Digital Detector (x 2)

WARNING

THE ELECTRONIC CABINETS (C1 FRONTAL, C1 LATERAL, C2, COOLIX 4000 CHILLERS, DETECTOR CONDITIONERS AND FLUORO UPS WHEN INSTALLED) INCLUDE FANS THAT ARE CREATING AIR–CIRCULATION OF PULSED–AIR. WHEN THIS PULSED AIR IS IN AN ENVIRONMENT THAT MAY CONTAIN AIRBORNE PATHOGENS LIKE AN EXAM ROOM/CONTROL ROOM, THERE IS A RISK OF TRANSMISSION OF THESE AIRBORNE PATHOGENS FROM PATIENTS TO OTHER PATIENTS OR CLINICAL PERSONNEL (NOSOCOMIAL DISEASES).
TO REDUCE THIS RISK, THE ELECTRONIC CABINETS MUST BE INSTALLED IN A ROOM SEPARATED FROM EXAM ROOM/CONTROL ROOM, I.E., TECHNICAL ROOM.

1.2 Technical room

- C2 LC/LP Cabinet
- C1 Frontal Cabinet and C1 Lateral Cabinet
- Coolix 4000 Chiller (2 Cabinets)
- Detector Conditioner HEAT DRY 1 (2 Cabinets)
- Fluoro UPS (option) (1 Cabinet)
- Power Distribution Box (Main Disconnet Panel)
- 3 kVA cabinets UPS

1.3 Control room

- VCIM
- DL Flat Panel
- DL Keyboard
- Monitors

2 Environmental Requirements/Limitations

2.1 Room Climate

NOTICE

Avoid extremes in temperatures

Innova system room climate requirements – relative humidity and temperature (individual products or components are classed by their installation area)

Table 3-1:

INSTALLATION ROOM OF PRODUCT OR COMPONENT	RELATIVE HUMIDITY (NON- CONDENS-ING)				TEMPERATURE					
	IN-USE		STORAGE		IN-USE (See Note (3a))		RECOMMENDED (See Note (3b))		STORAGE / TRANS-PORT	
	MIN	MAX	MIN	MAX	MIN	MAX	MIN	MAX	MIN	MAX
Examination room	30%	75%	10%	70%	+15°C +59°F	+32°C +90°F	Design for Patient/ Operator Comfort		-10°C +14°F	+50°C +122°F
Technical room (See Note (1))	30%	75%	10%	70%	+10°C +50°F	+35°C +95°F	+13°C +55°F	+25°C +77°F	-14°C +8°F	+50°C +122°F
Technical room with Fluoro UPS optional	30%	75%	10%	70%	+20°C +68 °F	+25°C +77°F	+20°C +68 °F	+25°C +77°F	-5°C +23°F	+50°C +122°F
Control room	30%	75%	10%	70%	+10°C +50°F	+35°C +95°F	+20°C +68°F	+25°C +77°F	-10°C +14°F	+50°C +122°F
Innova Digital Detector	See Note (2)									

NOTE: (1): The target temperature (best recommended) is 18°C (64°F).

The target humidity (best recommended) is 50% RH.

NOTE: (2): The detector should be stored at 10 to 40 °C (50 to 104 °F) and less than or equal to 90% RH in the plastic wrapped shipping box. (This should include two bags of desiccant as well). The lowest temperature (e.g. 10 ºC (50 °F)) and humidity is preferable. If they are to be stored outside of their shipping box or in the inner shipping box without plastic wrapping they should be stored at 20 °C (68 °F) or less and 30% RH or less. In terms of transportation, do not expose to temperatures below –20 ºC (–4 °F) **in its shipping box** for more than 15 hours. The detector will reach the ambient temperature after 20 to 25 hours. The detector should not be allowed to reach temperatures less than –10 ºC (14 °F) or irreparable damage to the detectors scintillator will occur. Care must be taken when removing a detector from a shipping box. If the detector has been subject to cold temperatures for an extended period the detector in the box should be allowed to sit in the plastic wrapped box to reach room temperature. This will prevent condensation from occurring. Condensation on the detector can cause irreparable damage to the electronics. Storage 10 to 40 ºC (50 to 104 °F); 10 to 90 % RH, 250 day storage transportation –20 to +60 ºC (–4 to 140 °F) and 10 to 80% RH. The Detector chiller HEAT DRY 1 is shipped within GE Healthcare packaging.

NOTE: (3a): **In use temperature limits** specify the range where the system shall work. Operating outside these limits could occur severe performance and reliability issues.

(3b): **Recommended temperature limits** specify the range where it is recommended to adjust air conditioning control in order to warranty current operations inside the in use range.

2.1.1 Relative Humidity and Temperature

Refer to Table 3-1. To obtain relative humidity and temperature requirements for components not specified in Table 3-1, refer to the appropriate component Pre–Installation Manual listed in Chapter 2, System Compatibility.

2.1.2 Altitude and Atmospheric Pressure

Refer to Table 3-2. To obtain altitude and atmospheric pressure requirements for components not specified in Table 3-2, refer to the appropriate component Pre–Installation Manual listed in Chapter 2, System Compatibility.

Table 3-2:

INSTALLATION ROOM OF PRODUCT OR COMPONENT	ALTITUDE (meters)				ATMOSPHERIC PRESSURE (kPa)			
	IN-USE		STORAGE / TRANSPORT		IN-USE		STORAGE / TRANSPORT	
	MIN	MAX	MIN	MAX	MIN	MAX	MIN	MAX
Examination room	-30	2440	-30	2440	70	106	70	106
Technical room (see Notice below)	-30	2440	-30	2440	70	106	50	106
Control room	0	2440	0	2440	N/A	N/A	N/A	N/A

NOTICE

In some cases condensation occurs and water drops from outlets and pipes of the air conditioner in the technical room.

Therefore, it is critical to install the cabinets where there is no risk of flood from the air conditioner.

Products or components applying toTable 3-1 and Table 3-2:

2.2 Equipment Heat Output (Dissipation)

2.2.1 Standard System

Refer to Table 3-3. To obtain heat output information for components not specified in Table 3-3, refer to the appropriate component Pre–Installation Manual listed in Chapter 2, System Compatibility.

Table 3-3:

		HEAT OUTPUT							
		Stand by		Moderate Use (8 cases / a 10 hour day)		Typical Use (13 cases / a 10 hour day)		Maximum Use (maximum peak power during exam)	
Room	**Core System**	**kW**	**BTU/hr**	**kW**	**BTU/hr**	**kW**	**BTU/hr**	**kW**	**BTU/hr**
Exam Room	Innova LC/LP positioner and table	0.61	2076	0.75	2540	1.21	4128	1.62	5517
Ctrl Room	DL user area with 1 TFT monitor	0.16	546	0.16	546	0.16	546	0.16	546
	3 B&W flat monitors	0.25	859	0.25	859	0.25	859	0.25	859
	Ctrl Room Total	**0.41**	**1405**	**0.41**	**1405**	**0.41**	**1405**	**0.41**	**1405**
Tech Room	C1 Frontal Cabinet	0.71	2421	0.99	3389	1.29	4412	1.59	5435
	C1 Lateral Cabinet	0.31	1057	0.56	1923	0.86	2946	1.16	3969
	C2 Cabinet	0.29	989	0.83	2813	1.34	4571	1.81	6171
	Coolix X-Ray tube chiller Frontal (1) (2)	2.53	8619	4.49	15309	5.49	18725	6.93	23625
	Coolix X-Ray tube chiller Lateral (1) (2)	2.53	8619	4.19	14274	4.79	16319	6.93	23625
	Detector conditioner Frontal	0.21	709	0.21	709	0.21	709	0.21	709
	Detector conditioner Lateral	0.21	709	0.21	709	0.21	709	0.21	709
	Main disconnect panel PDB	0.60	2216	0.65	2216	0.65	2216	0.65	2216
	3kVA Cabinet UPS - model 9125	0.16	546	0.16	546	0.16	546	0.16	546
	3kVA Cabinet UPS - model 9130 (4)	0.37	1257	0.37	1257	0.37	1257	0.37	1257
	Tech Room Total	**7.54**	**25885**	**12.29**	**41888**	**15**	**51153**	**19.65**	**67003**
Total for core system		**8.56**	**29366**	**13.44**	**45832**	**16.63**	**56685**	**21.68**	**73925**
Room	Options (3)	Stand by		Moderate Use		Typical Use		Maximum Use	
Exam Room	7 in room B&W TFT monitors	0.59	2005	Same values as Stand by		Same values as Stand by		Same values as Stand by	
	In room AW TFT monitor	0.12	409						
	Typical injector	0.09	320						
	Exam room total	**0.80**	**2734**						
Ctrl Room	AW work station	0.35	1201						
	2 AW TFT monitors	0.24	818						
	Printer	0.31	1054						
	Ctrl room total	**0.90**	**3073**						
Typical configuration without fluoro UPS		**10.27**	**35173**	**15.15**	**51640**	**18.33**	**62493**	**23.39**	**79732**
Note (1): Air flow requirements 1200 m^3/h (706 CFM)									
Note (2): For more details, consult appropriate pre–installation manual									

		HEAT OUTPUT							
		Stand by		Moderate Use (8 cases / a 10 hour day)		Typical Use (13 cases / a 10 hour day)		Maximum Use (maximum peak power during exam)	
Room	Core System	kW	BTU/hr	kW	BTU/hr	kW	BTU/hr	kW	BTU/hr
Note (3): For UPS 20 kVA option refer to Section 2.2.2									
Note (4): On batteries heat output = 0.52 kW / 1755 BTU									
Note (IVUS): For IVUS environmental limitations and heat output, refer to Section 2.2.3									

CAUTION

Make sure there is a ventilation air flow, preferably ensured by natural air flow, otherwise by enforced ventilation, so that hydrogen concentration is below 1% (according to Standard IEC 62040-1-2).

2.2.2 Fluoro UPS Option

Illustration 3-1:

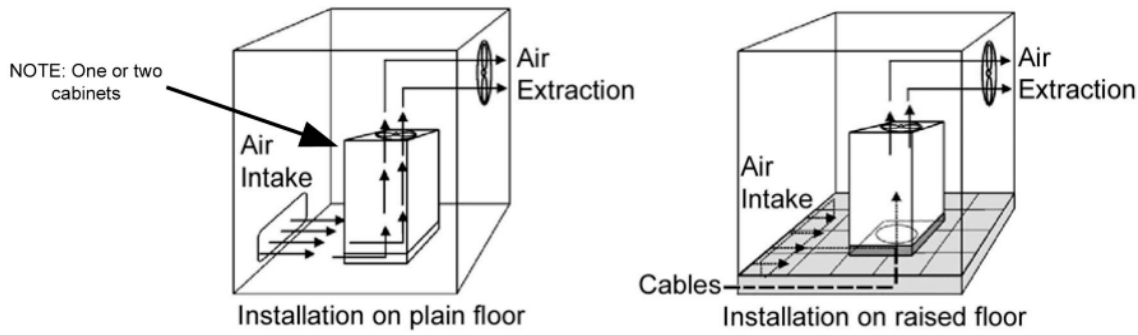

The heat produced by the UPS is transferred to the environment by its ventilation. Cooling air enters the cabinets through the air inlet (grids) located at the bottom and exhausted through the outlet on the roof. A suitable ventilation or cooling system must be installed to extract the heat from the UPS room.

NOTICE

Do not put anything on the top of the cabinet.

If the UPS is placed on a raised floor, the airflow for UPS cooling should enter from underneath the UPS, through the appropriate aperture on the raised floor.

If the UPS runs in a dusty environment, we recommend strongly to install filters on the air inlet of the UPS room. In this case it should be considered that these filters can cause reduced speed at the air inlet.

The size of the air inlet has therefore to be dimensioned accordingly.

Contact your Local Distributor or one of the Service Centre, which will help you to find valuable solutions.

Table 3-4 indicates the typical heat dissipation at nominal load and specify cooling air flow in two situations:

- 1000 m (3280 ft) altitude, cooling air between 25°C (77°F) and 30°C(86°F)
- 250 m (820 ft) altitude, cooling air below 18°C (64°F)

Table 3-4:

Fluoro UPS	Typical heat output	On–line cooling air flow at 30°C / 86°F	Typical on-line cooling air flow at 18°C / 64°F
CE version	1.50 kW (5101 BTU/hr)	625 m^3/h (368 CFM)	227 m^3/h (134 CFM)
UL version	4720 BTU/hr (1.38 kW)	301 CFM (511 m^3/h)	119 CFM (203 m^3/h)

2.2.3 IVUS Option

2.2.3.1 Environmental Limitations in Use (room climate)

Table 3-5: IVUS Rev 1

Humidity (non condensing) :	30 - 80 %	
Temperature (at 20% Relative Humidity) :	15 - 32 C	(60 - 90 F)
Altitude (Relative to see level) :	max 3048 m	(max 10000 ft)

Table 3-6: IVUS Rev 2

Humidity (non condensing) :	30 - 80 %	
Temperature (at 20% Relative Humidity) :	5 - 35 C	(41 - 95 F)
Altitude (Relative to see level) :	max 3048 m	(max 10000 ft)

2.2.3.2 Heat Output

Device	Location	Heat output
PC	Control room	335 W – 1206 BTU/h
Monitor	Control room	125 W – 427 BTU/h
Printer	Control room	67 W – 229 BTU/h (idle)

⚠CAUTION

Take any steps necessary to provide correct temperature and dust free environment for correct operation of PC in the control room.

2.3 IEC60601–1–2 Electromagnetic Standard Compliance & Documentation

2.3.1 General Scope

This equipment complies with IEC-60601-1-2: Edition 2.1 and Edition 3 EMC standard for medical devices.

The Innova system is suitable to be used in the electromagnetic environment, as per the limits & recommendations described in the tables here after:

- Emission Compliance level & limits (Table 3-7).

- Immunity Compliance level & recommendations to maintain equipment clinical utility (see Table 3-8,Table 3-9 and Table 3-10).

NOTE: This system complies with above–mentioned EMC standard when used with supplied cables up to maximum lengths referenced in the MIS MAPS or system cables interconnect diagrams.

2.3.2 Electromagnetic Emission

The Innova system is suitable for use in the specified electromagnetic environment. The purchaser or user of the Innova system should assure that it is used in an electromagnetic environment as described below:

Table 3-7:

Emissions	Test Compliance	Electromagnetic Environment
Radio–Frequency Emissions CISPR11	Group1 Class A limits	The Innova system is suitable for use in all establishments other than domestic and those directly connected to the low voltage power supply network that supplies buildings used for domestic purposes.
	Group1 Class A limits	The Innova system uses RF energy only for its internal function. Therefore, the RF emission is very low and not likely to cause any interference in nearby electronic equipment.
Harmonic emissions IEC 61000–3–2	Not applicable	The Innova system is suitable for use only in establishments not directly connected to a public low voltage power supply network.
Voltage fluctuations/ flicker emissions IEC 61000–3–3	Not applicable	The Innova system is suitable for use only in establishments not directly connected to a public low voltage power supply network.

2.3.3 Electromagnetic Immunity

2.3.3.1 Electromagnetic Immunity

The Innova system is suitable for use in the specified electromagnetic environment. The purchaser or user of the Innova system should assure that it is used in an electromagnetic environment as described below:

Table 3-8:

Immunity Test	IEC 60601–1–2 Test Level	Compliance Level	Electromagnetic Environment
Electrostatic discharge (ESD) IEC 61000–4–2	6 kV contact 8 kV air	6 kV contact 8 kV air	Floors are wood, concrete, or ceramic tile, or floors are covered with synthetic material and the relative humidity is at least 30 percent.
Electrical fast transient/burst IEC 61000–4–4	2 kV for power supply lines 1 kV for input/output lines	2 kV for power supply lines 1 kV for input/output lines	Mains power quality is that of a typical commercial and/or hospital environment

Immunity Test	IEC 60601–1–2 Test Level	Compliance Level	Electromagnetic Environment
Surge IEC 61000–4–5	1 kV line(s) to lines(s) 2 kV line(s) to earth	1 kV line(s) to lines(s) 2 kV line(s) to earth	Mains power quality is that of a typical commercial and/or hospital environment.
Voltage dips, short interruptions and voltage variations on power supply input lines IEC 61000–4–11	0 % U_n for 5 sec	0 % U_n for 5 sec	Mains power quality is that of a typical commercial and/or hospital environment. If the user of the Innova system requires continued operation during power mains interruptions, it is recommended that the Innova system be powered from an uninterruptible power supply or a battery.
Power frequency (50/60 Hz) magnetic field IEC 61000–4–8	3 A/m	3 A/m 1 A/m	Power frequency magnetic fields are at levels characteristic of a typical location in a typical commercial and/or hospital environment. At that disturbance amplitude level the monitor image might present some slight flicker. For image quality improvement, the monitor might be removed from the low frequency magnetic field source vicinity. At that disturbance amplitude level the system is fully operational.
Note: These are guidelines. Actual conditions may vary.			

2.3.3.2 Electromagnetic Immunity IEC 60601–1–2

The Innova system is suitable for use in the specified electromagnetic environment. The purchaser or user of the Innova system should assure that it is used in an electromagnetic environment as described below:

Table 3-9:

Immunity Test	IEC 60601-1-2 Test Level	Compliance Level	Electromagnetic Environment
			Portable and mobile RF communications equipment are used no closer to any part of the Innova system, including cables, than the recommended separation distance calculated from the equation appropriate for the frequency of the transmitter.
Conducted RF IEC 61000-4-6	3 V, 150 kHz to 80 MHz	[$V_{1=}$] 3 V	At that disturbance amplitude the monitor image might present some slight flicker. For image quality improvement, the monitor might be removed from the electric field source vicinity.
		[$V_{2=}$] 0.3 V	At that disturbance amplitude the system is fully operational.
Radiated RF IEC 61000-4-3	3 V/m, 80 kHz to 800 MHz	[$E_{1=}$] 3 V/m	At that disturbance amplitude the monitor image might present some slight flicker. For image quality improvement, the monitor might be removed from the electric field source vicinity.
		[$E_{2=}$] 0.3 V/m	At that disturbance amplitude the system is fully operational.
	3 V/m, 800 MHz to 2.5 GHz	[$E_{3=}$] 3 V/m	At that disturbance amplitude the monitor image might present some slight flicker. For image quality improvement, the monitor might be removed from the electric field source vicinity.
		[$E_{4=}$] 0.3 V/m	At that disturbance amplitude level the system is fully operational.

Immunity Test	IEC 60601-1-2 Test Level	Compliance Level	Electromagnetic Environment
			Note: P is the power rating of the transmitter in watts (W) according to the transmitter manufacturer and d is the recommended separation distance in meters (m). Field strengths from fixed RF transmitters, as determined by an electromagnetic site survey,* are less than the compliance level in each frequency range.** Interference may occur in the vicinity of equipment marked with the following symbol:

NOTE: * Field strengths from fixed transmitters, such as base stations for cellular telephones and land mobile radios, amateur radio, AM and FM radio broadcast, and TV broadcast cannot be estimated accurately. To assess the electromagnetic environment due to fixed RF transmitters, an electromagnetic site survey should be performed. If the measured field strength exceeds the RF compliance level above, observe the Innova system to verify normal operation in each use location. If abnormal performance is observed, additional measures may be necessary, such as re–orienting or relocating the Innova system

**Over the frequency range 150 kHz to 2.5GHz, the recommended field strengths is here less than 0.3V/m.

The Recommended Separation Distances are listed in Table 3-10.

These are guidelines. Actual conditions may vary.

2.3.3.3 Recommended Separation Distances for Portable and Mobile RF Communications Equipment IEC 60601–1–2

Table 3-10:

Frequency of Transmitter	150 KHz to 26 MHz	26 MHz to 80 MHz	80 MHz to 800 MHz	800 MHz to 2.5 GHz
Equation	$d = [3.5 / V_2]\sqrt{P}$	$d = [3.5 / V_2]\sqrt{P}$	$d = [3.5 / E_2]\sqrt{P}$	$d = [3.5 / E_4]\sqrt{P}$
Rated Power of Transmitter (watts)	Distance (meters)	Distance (meters)	Distance (meters)	Distance (meters)
10 mW	1.2	1.2	1.2	2.3
100 mW	3.8	3.8	3.8	7.3
1	12	12	12	23 (*)
10	38	38	38	73
100	120	120	120	230

For transmitters rated at a power not listed above, the DISTANCE can be estimated using the equation in the corresponding column, where P is the power rating of the transmitter in watts (W) according to the transmitter manufacturer.

NOTE: These are guidelines. Actual conditions may vary.

2.3.4 Limitations Management

Adhering to the distance separation recommended in Table 3-10, between 150 KHz & 2.5 GHz, will reduce disturbances recorded at the image level, but may not eliminate all disturbances. However, when installed and operated as specified herein, the system will maintain its basic safety and essential performance by continuing to acquire, display, and store diagnostic quality images safely.

For example, a 1 W mobile phone (800 MHz to 2.5 GHz carrier frequency) shall be put 23 meters (see (*) Table 3-10) apart from the Innova system (in order to avoid images interferences risks).

2.3.5 Use Limitation

The use of accessories, transducers, and cables other than those specified may result in degraded ELECTROMAGNETIC COMPATIBILITY of the Innova system

2.3.6 Installations Requirements & Environment Control

NOTICE

In order to minimize interference risks, the following requirements shall apply:

- Cables shielding & grounding:
  All interconnect cables to peripheral devices must be shielded and properly grounded. Use of cables not properly shielded and grounded may result in the equipment causing radio frequency interference.
- Separated Power supply distribution panel & separated power line:
  - This product complies with the radiated emission limits as per the CISPR11 Group1 ClassA standard at the premises of a typical user. .
  - The Innova system is predominantly intended for use (e.g. in hospitals) with a dedicated supply system, and with an X–ray shielded room.
  - In case of using in a domestic environment (e.g. doctors' offices), in order to avoid interferences, it is recommended to use a separated AC power distribution panel & separated power line, and an X–ray shielded room.
- Subsystems, options & accessories Power supply distribution:
  All components, accessories subsystems, systems which are electrically connected to the Innova system, have to be all AC power supplied by the same power distribution panel & line.

  NOTE: In order to avoid interferences, the same AC power distribution panel should supply all Innova system components , accessories, subsystems and options as the Advantage Workstation, and the UPS. That same AC power distribution panel should be supplied by a separated AC power line (coming from a separated transformer line and winding).
- Stacked components & equipment:
  The Innova system should not be used adjacent to or stacked with other equipment; if adjacent or stacked use is necessary, the Innova system should be observed to verify normal operation in the configuration in which it will be used.
- Low frequency magnetic field:
  In case of an Innova system, the Gantry (digital detector) shall be apart 1meter from the generator cabinet, 1m. from the PDB cabinet, 1 m. from the UPS cabinet, and 1 meter apart from monitors. These distances specifications shall minimize the low frequency magnetic field interference risk.
- Static Magnetic Field Limits : The Innova system is compatible with the Earth magnetic Field. Earth magnetic Field is lower than 1 Gauss.
- Electrostatic discharges environment & recommendations:
  - In order to reduce electrostatic discharge interference, install a charge dissipative floor material to avoid electrostatic charge buildup.
  - The relative humidity shall be at least 30 percent.
  - The dissipative material shall be connected to the system ground reference, if applicable.

2.4 Radiation Protection

Because x–ray equipment produces radiation, special precautions may be needed or special site modifications may be required. The General Electric Company does not make recommendations regarding radiation protection. It is the purchasers' responsibility to consult a radiation physicist for advise on radiation protection in x–ray rooms.

2.5 Audible noise

- Less than 50 dB (A) at 1 meter for an Innova LC Positioner.
- Less than 50 dB (A) at 1 meter for an Innova LP4 Positioner.
- Limited to 50 dB (A) at 1 meter for Omega V table.
- Limited to 55 dB (A) at 1 meter for C2 LC/LP Cabinet.
- Limited to 60 dB (A) at 1 meter for the COOLIX 4000.
- Limited to 65 dB (A) at 1 meter for C1 Frontal Cabinet.
- Limited to 65 dB (A) at 1 meter for C1 Lateral Cabinet.
- Limited to 52 dB (A) (background of 35 dB (A)) at 1 meter for Digital Detector Conditioner Thermo–Con.
- Less than 50 dB (A) at 1 meter for a DL LCD monitor.
- Less than 50 dB (A) at 1 meter for the Fluoro UPS.

The values contained inTable 3-11 are the results of the measurement performed on the first Innova 3131-IQ system installed on a clinical site.

Table 3-11: Gantry Noise measurements

Measurements	Gantry (FRT, LAT, both)	Gantry positions	Peak (db)	Mean (db)
Ambient (System off)		1	N/A	55.7
System ON (no motion, no X-Ray)		2	N/A	58.2
Motions	FRT (Detector lift)	1	86.2	66.3
	LAT (C-Arc)	2	86.3	63.7
	FRT and LAT	2	85.1	66.9
First scopie (anode acceleration)	FRT	1	80.2	60.3
	LAT	2	80.3	59.6
Fluoro	FRT	1	79.7	59.2
	LAT	2	79.5	59.1
	FRT and LAT	2	79.8	60.2

NOTE: Noise generated by system cabinets all together is 70dB. If cabinets are installed too close to the exam room (e.g. behind sliding doors) appropriate measures have to be implemented during the pre-installation to effectively reduce noise in the exam room.

2.6 Windows and curtains

When the examination room has a window with an aperture outside of the controlled light area (day light, other...) a curtain has to maintain the light intensity under a limit fixed to 150 lux.

3 Structural Requirements

3.1 Room Size

For Room size dimensions, refer to Chapter 4, Room Layout Drawings.

For additional details, refer to Chapter 4, Room Layout Considerations.

3.2 Elevator and Door Size Requirements

Minimum door sizes also apply to hallways and elevators. For additional details, refer to Chapter 7, Shipping Information

3.2.1 Door Height

The minimum door height (to accommodate Innova positioner on its dolly) is **2001 mm** (78.8 in).

3.2.2 Door Width

The minimum door width needed (to accommodate the Innova LC/LP shipping dolly) is 1040 mm (41 in) with the cable inlet and the dolly stabilizers removed.

NOTE: Door widths are based on a *straight–in* approach requiring a 2440 mm (96 in) wide corridor. Calculations need to be made for accommodation of equipment through narrower corridors.

3.2.3 Elevator Depth

The minimum elevator depth needed to accommodate the Innova LP4 shipping dolly is 2954 mm (116.3 in).

3.3 Floor

3.3.1 General Vascular GE Healthcare Policy

GE Healthcare's Customer is responsible for the structural analysis and mounting of the base plates. If GE Healthcare is forced to mount the base plate, the Local Customer Team must hire a structural engineer to design and approve the mounting method and provide GE Healthcare with an engineering report.

The floor level cannot exceed a general levelness of 5 mm (0.2 in) for any 2 meters (79 in).

NOTICE

The floor slabs on which the equipment is to be installed must have a levelness of 1 mm (0.04 in) per meter (40 in). Position of baseplates and table basement depends on the type of installation. The two types of installation are given in Illustration 3-2.

Illustration 3-2:

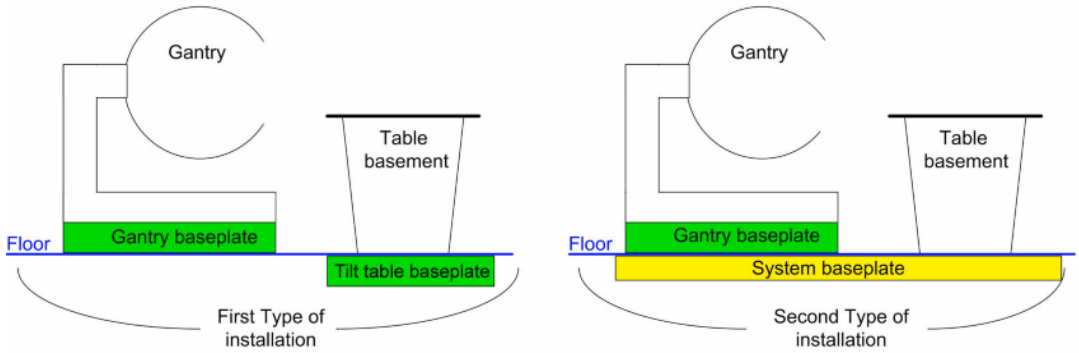

The preferred installation method for the Innova LC/LP Positioner or the Omega tables is through-bolting. The through-bolting method can be used in all seismic zones. If through-bolting cannot be used, use provided floor anchors instead.

Illustration 3-3: Through–Bolt Supplied (Slab Type Floor Construction)

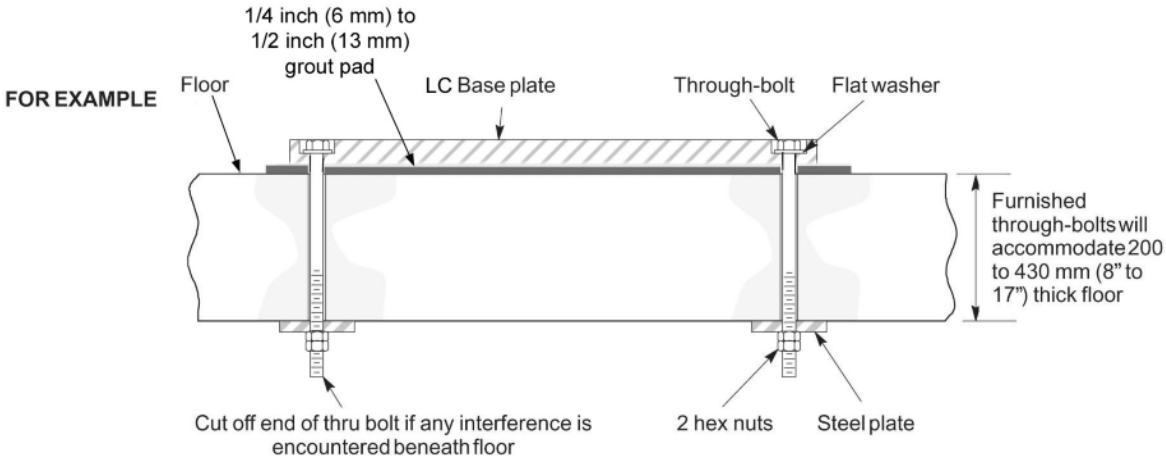

3.3.2 Floor requirements when using provided floor anchors

The maximum pullout force per provided anchor was calculated assuming:

- A concrete compression strength of **17.24 MPa** at 28 days (which is the minimum required compression strength).
- Anchors installed to the required hole depth of **165.1 mm (6.5 in)** minimum, and
- Center of anchor hole to concrete edge distance **79.4 mm (3.12 in)**.

Make sure to obtain data on compression strength of the concrete before using floor anchors.

3.3.3 Pan Type Floor Construction Requirement

For Pan type floor construction, steel channels must be designed by a local structural engineer to span floor joists. See Illustration 3-4.

NOTE: For specific floor preparation procedures, refer to *Single Plane and Biplane Innova Systems Pre–Installation Kit Installation Procedures*.

Illustration 3-4: Through–Bolt Supplied (Pan Type Floor Construction)

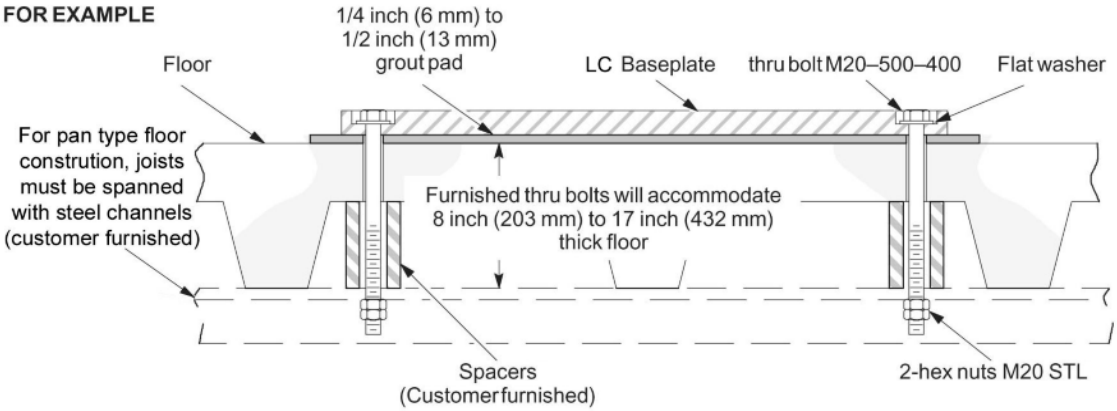

Illustration 3-5:

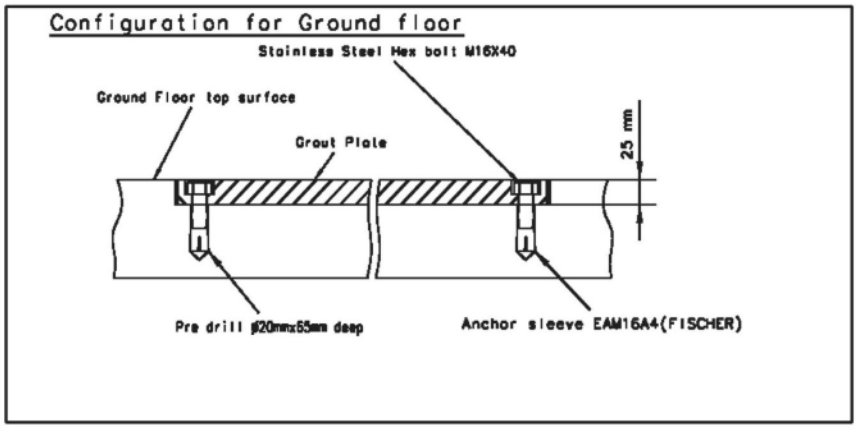

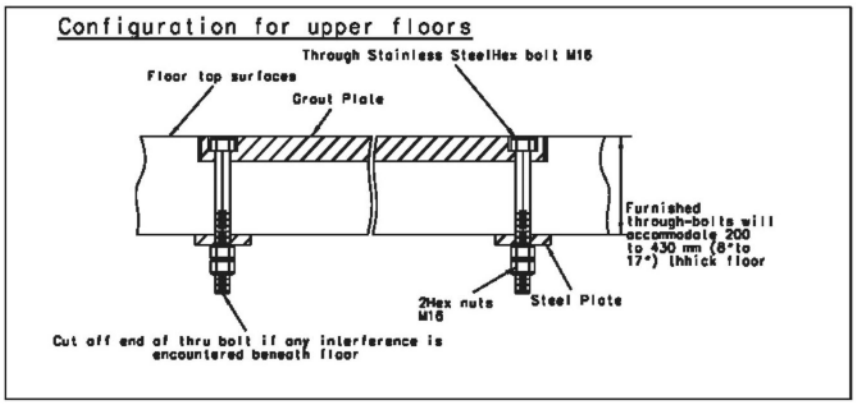

NOTE: Prepare the floor such that the Tilt Table baseplate will be flush with the floor surface.

For alternative table bolts or seismic area, refer to template drawing shown in Illustration *Gantry and table mounting holes* contained in Chapter 5, Mounting Requirements.

3.3.4 Hole dimension and preferred location in concrete floor

In the examination room, the Innova LC Positioner is not placed on a computer floor but directly put on concrete floor, the location of the cable access needs to be carefully planned.

Otherwise, if the cable run is located under the concrete floor, the cables will have to come through the floor and in this case you will need two holes, one for the LC Positioner and the other for the patient table.

The diameter of both holes must be the same 225 mm or 9 in.

Illustration 3-6: Hole location in concrete floor

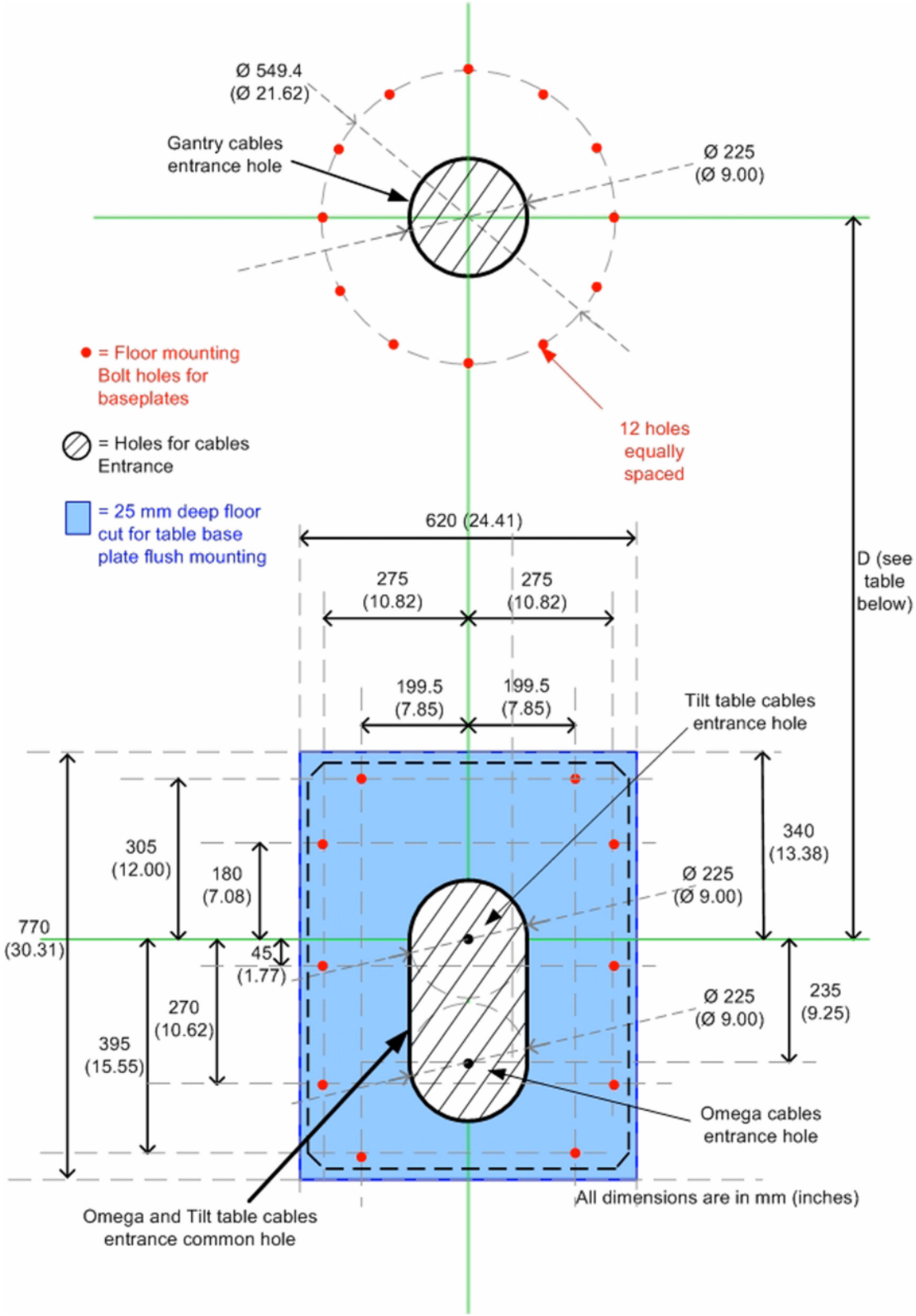

Table 3-12: D distance of Illustration 3-6

	ANGIO / CARDIO	CARDIO / NEURO
Omega IV Compact	NA	1395 mm (54.9 in)
Omega V Long	1278 mm (50.3 in)	1395 mm (54.9 in)
Omega V non motorized Long	1278 mm (50.3 in)	1395 mm (54.9 in)

NOTICE

Due to the plastic bushing used in the USA to protect cables from the sharp edges of conduits it is necessary to place the cable conduit inside the table cable access opening but the height of the outcoming conduit plus bushing is limited to 12 mm (1/2 in).

NOTE: Refer to table *Chemical anchors Pull out efforts and recommendations* in Chapter 5, Mounting Requirements for pull out effort on each fixation bolts.

3.3.5 Water Pipe Requirements

Illustration 3-7: Water Conduit location

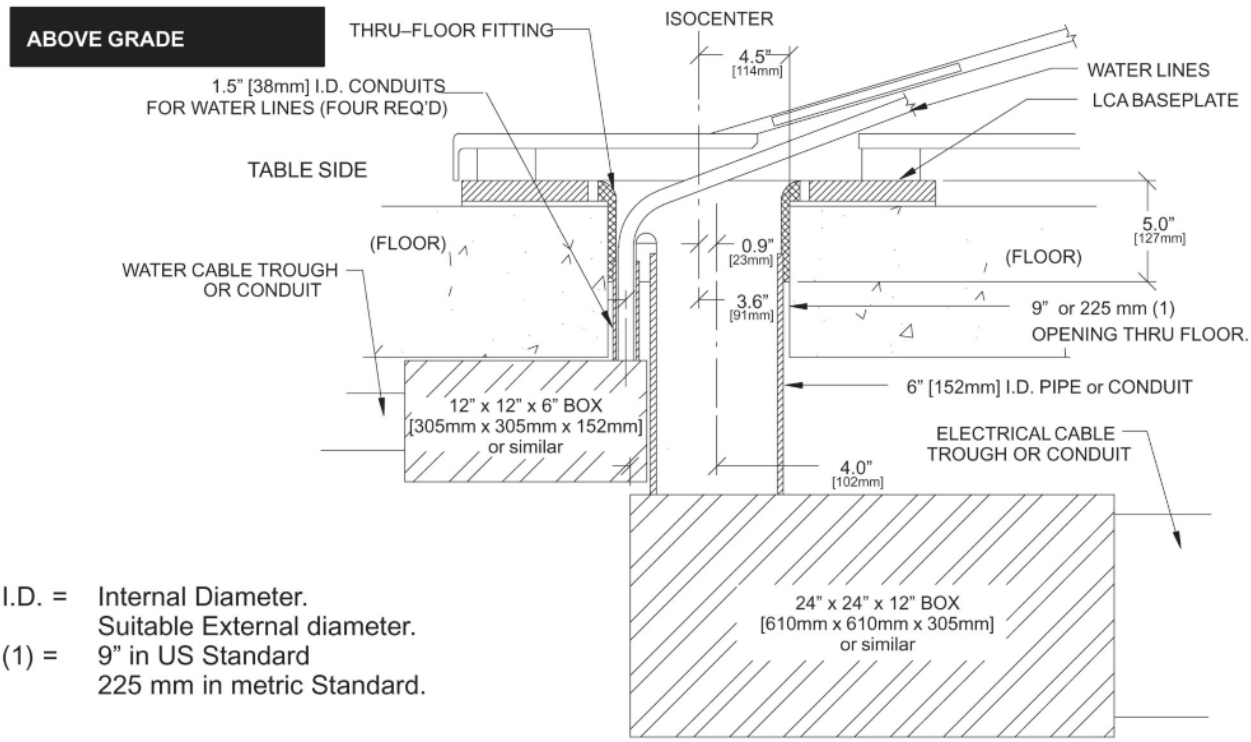

I.D. = Internal Diameter.
Suitable External diameter.
(1) = 9" in US Standard
225 mm in metric Standard.

Note: Pipe, junction box and duct or conduit are to be supplied and installed by Customer or customer's Contractor.

NOTICE

In some countries, depending on local regulations, it may be forbidden to run electrical cables and water pipes in the same conduit. In this case, two separate conduits are required.

Illustration 3-8: Water Conduit location

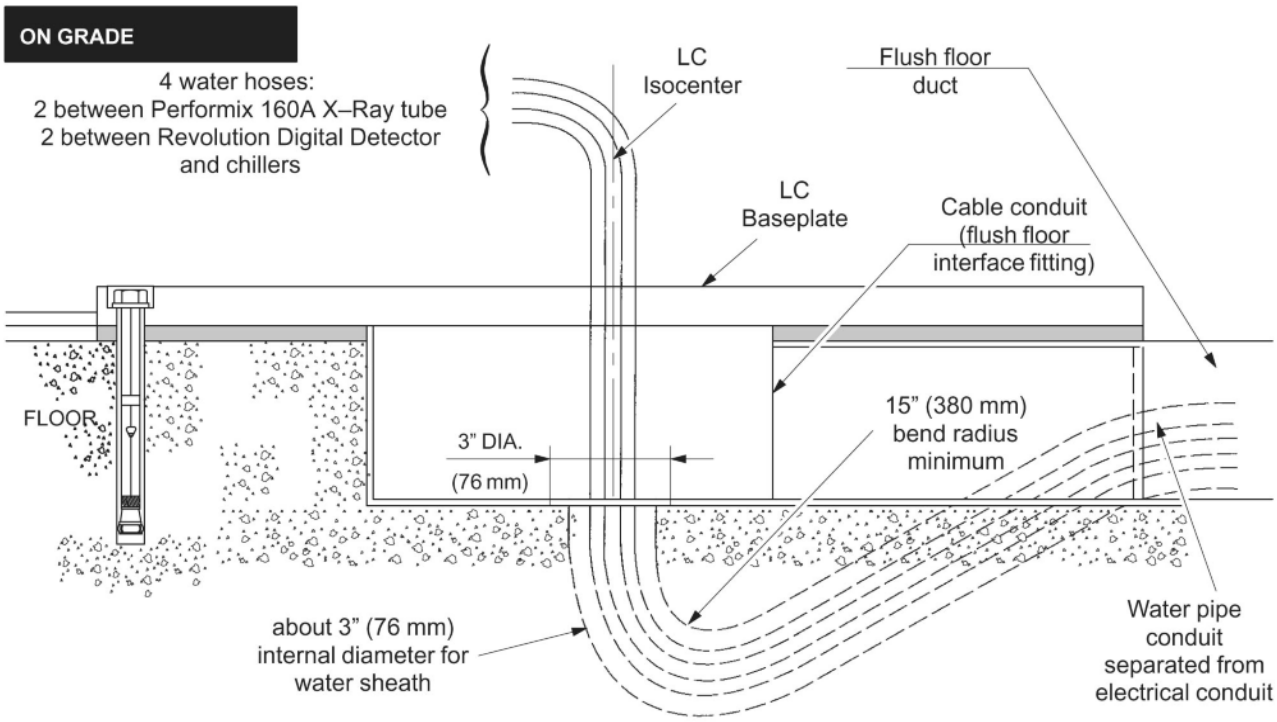

Note: Flush floor interface fitting is part of GEMS installation kit 2286398 and is installed by Customer or customer's Contractor.

NOTE: For further information on kit 2286398 (S18101SK), refer to *Innova LC Positioner and Omega/Tilt Table Floor Preparation Kits (GE Healthcare supplied)* in Chapter 5, Mounting Requirements.

Illustration 3-9: Cable Curvature

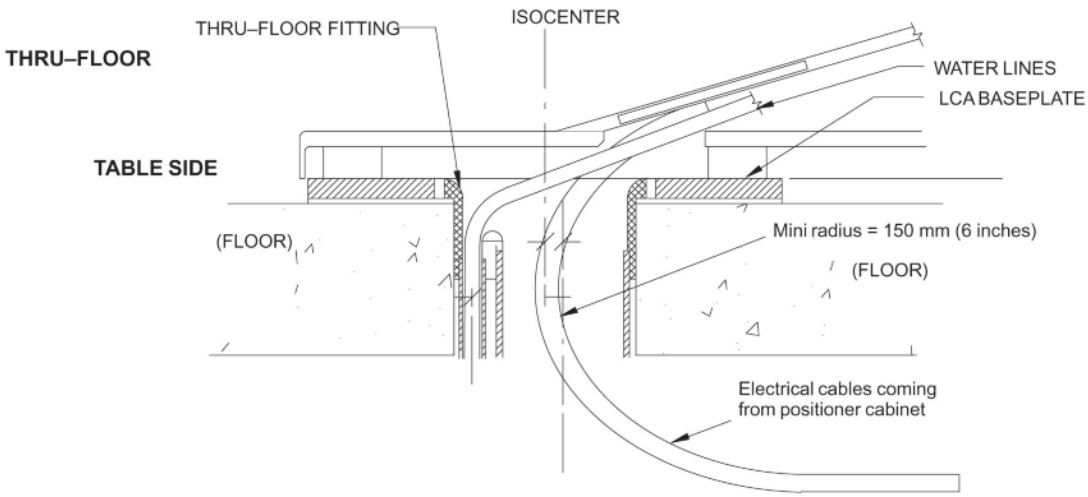

Note: In case of thru–floor cabling, if the electrical cables are coming from the head side, they will need to have a minimum curvature with a minimum radius of 150 mm (6”).
In any other cases (i.e. flush floor) no such curvature is allowed.

Illustration 3-10: Cable Curvature

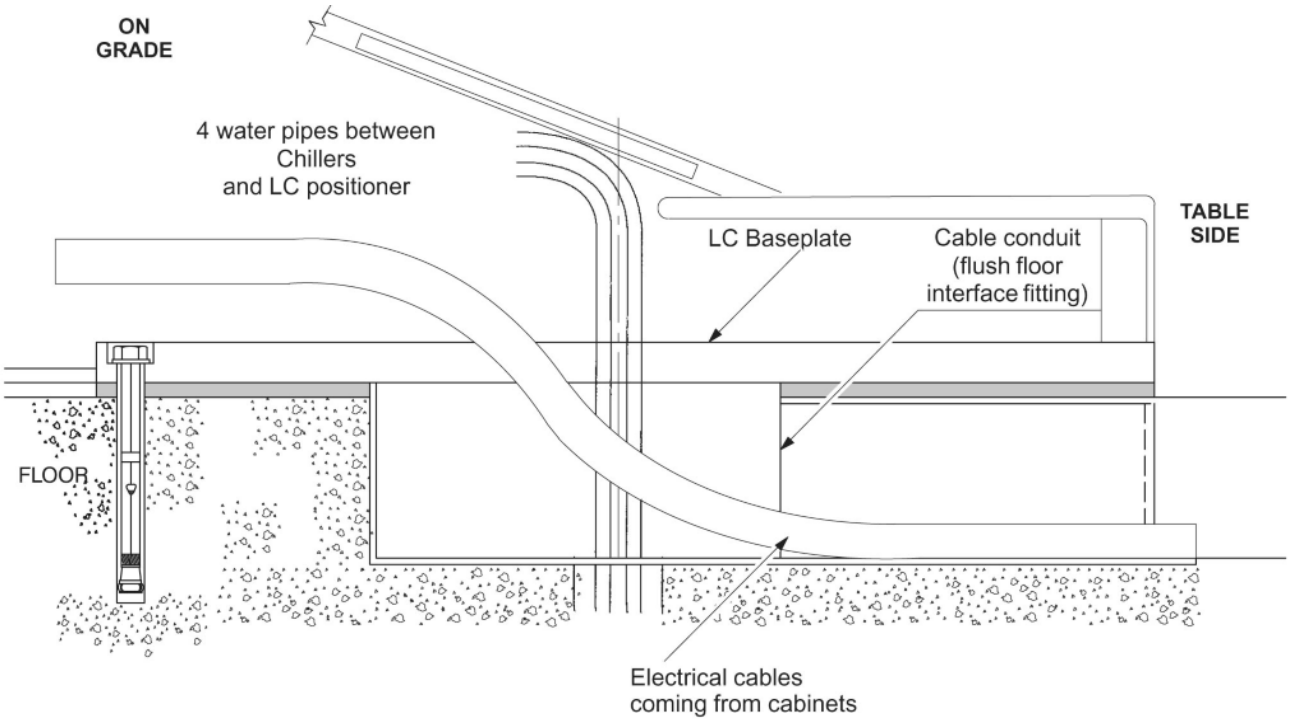

NOTE: In case of on grade cabling, because of the minimum curvature constraint of 150 mm (6”), the cable will have to come from the side between Innova LC/LP Positioner and patient table.

3.3.6 Seismic areas

Chiller: The seismic kit for both Coolix 4000 is included with the chiller when shipped.

In Seismic areas all cabinets must be anchored to the floor. See Chapter 2, System Compatibility for referential documents. Frontal C1, Lateral C1 & C2 Cabinets: Wall support 2285242.

Every sub–system is delivered on site with its proper seismic kit.

- Monitor Flat Panel Seismic Kit: 2353317
- VCIM seismic kit: 2365510.

Anti–seismic means be installed before opening the system for normal use.

3.4 Ceiling

3.4.1 LP4 rails

The required ceiling rail height for the LP4 is 2845 mm +/–5 mm (9 ft. 4 in +/–0.2 in). The rails must be mounted so that the distance from isocenter to the wall where the park position is designated is an absolute minimum of 3050 mm (10 ft. 1 in). The recommended distance is equal to 4.275 m (14 ft). This includes the 150 mm (6 in) clearance between the end of the rails and the wall. SeeIllustration 3-11 andIllustration 3-12 Potential Wall Interferences. Also, the lips on the rails must face toward isocenter.

NOTE: Do not attempt to install the LP4 at any height other than 2845 mm (9 ft. 4 in) without first contacting your General Electric Medical Systems representative.

The ceiling suspension rails must be parallel to each other. The distance between the center of the rail mounting holes must be 97.8 –0 +0.2 cm. (38–1/2, –0 +1/16, in). The rails must be level to 3 mm (1/8 in) over the entire length of the rail.

NOTE: It is the responsibility of the Hospital's Contractor to properly install the LP4 Stationary rails per the room drawings.

Illustration 3-11: Location of Stationary Rails on Ceiling – Recommended max. configuration

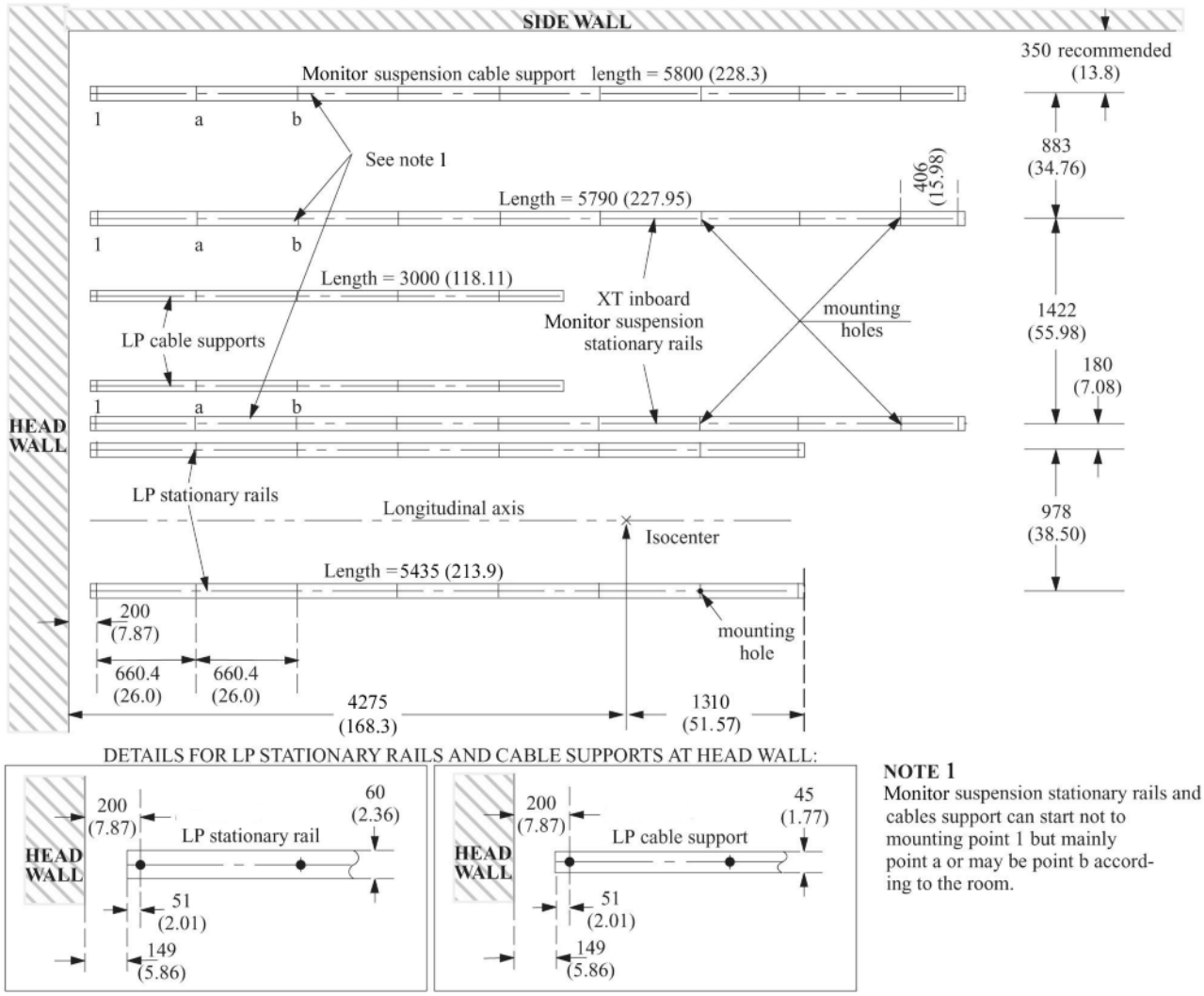

NOTE: It is recommended to install the LP4 Stationary Rails at the maximum configuration (Illustration 3-11). Some room configurations may require shorter configurations.Illustration 3-12 shows the *Absolute Minimum* configuration allowed.

Illustration 3-12: Location of Stationary Rails on Ceiling – Absolute min. configuration

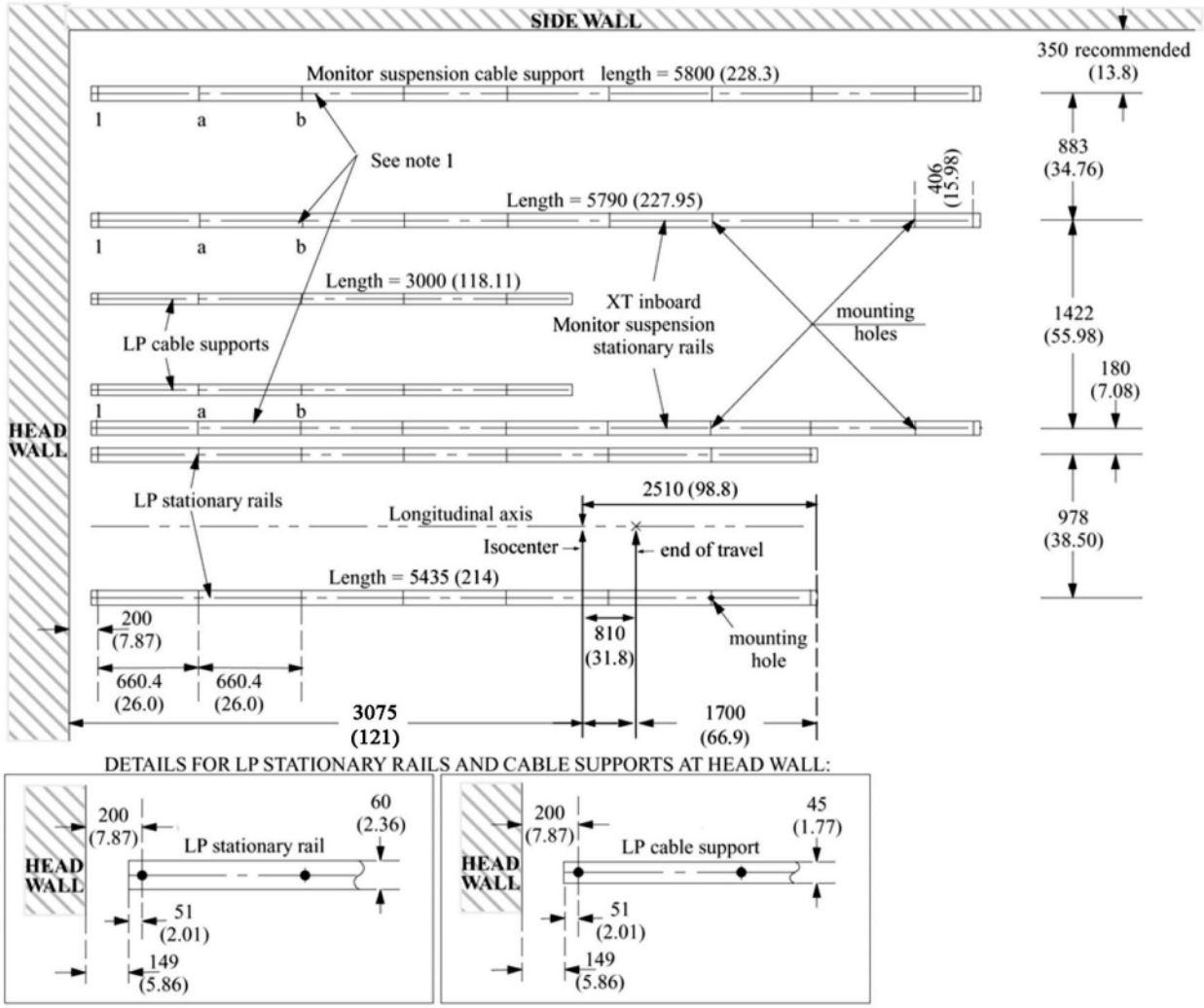

NOTE 1
Monitor suspension stationary rails and cables support can start not to mounting point 1 but mainly point a or may be point b according to the room.

Illustration 3-13: LP4 Rail Mounting Specifications

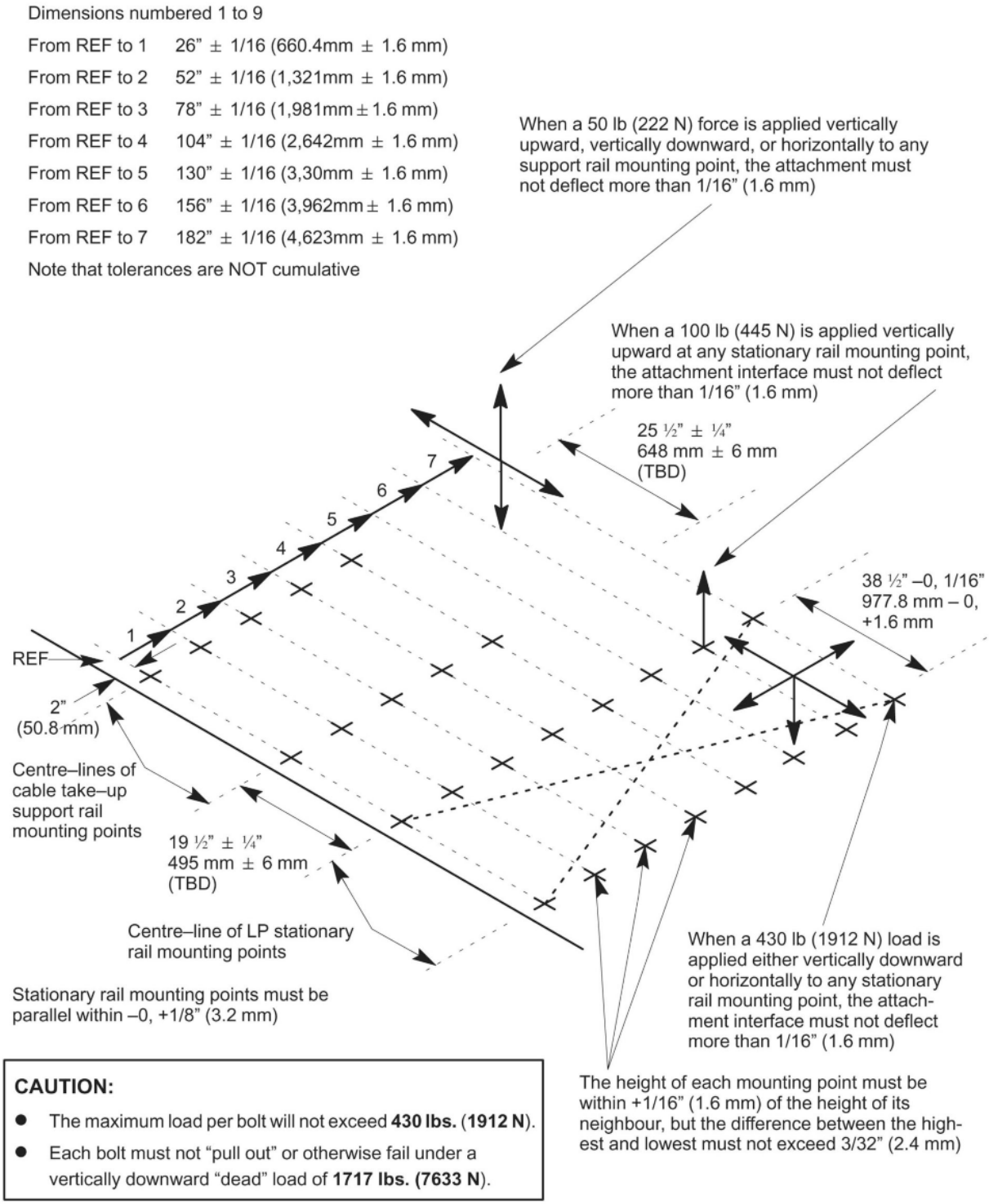

CAUTION:

- The maximum load per bolt will not exceed **430 lbs.** (**1912 N**).
- Each bolt must not "pull out" or otherwise fail under a vertically downward "dead" load of **1717 lbs. (7633 N**).

STRUCTURE SHOULD NOT ALLOW VIBRATIONS TRANSMISSION EQUAL OR LOWER THAN 10 Hz

3.4.2 Monitor Suspension Rails

Aluminum rails support the In-room Monitor Bridge used in Innova 2121-IQ/3131-IQ system X-Ray rooms.

3.4.2.1 Reference

For additional details on ceiling requirements for stationary rails, refer to:

- Direction 46–019639, *Advantx (VHLA) XT Stationary Rails Installation and Adjustment*.
- Direction 2393190-100, *Pre-Installation Manual for LCD Monitor Suspension with 4, 6, or 8 monitors*.

3.4.2.2 Rail Mounting

Attach stationary rails to structural steel with through-bolts in concrete ceilings. Do not use screw anchors in direct tension.

Mount stationary rails directly to the ceiling slab or to flush–mounted unistrut or halfen structure. In higher rooms with false ceiling, mount stationary rails to rigid vertical members hung from ceiling slab.

Securing a supplementary channel to the bottom of the vertical members and mounting the stationary rails to this channel can greatly reduce the number of vertical members.

The stationary rail support structure must be leveled before installation can begin. Do not assume that any support structure is level within specified tolerances, particularly after removing suspensions from an existing room.

3.4.2.3 Bolt Specifications

- The maximum load per bolt will not exceed **350 lbs (1557 N)**.
- Each bolt must not “pull out” or otherwise fail under a vertically downward *dead* load of **1400 lbs (6228 N)**.

3.4.2.4 Rails selection

Monitor suspension rails in different lengths can be selected. Please refer to the GTC or contact the GE representative.

3.5 Walls

3.5.1 General requirement

The C1 Cabinets, the C2 Cabinet, and the PDB Cabinet must be securely fastened to the wall to prevent them from tipping.

3.5.2 Seismic Areas

Consider local seismic codes when planning cabinet mounting. Consult seismic expert to determine which mounting method is appropriate for the seismic region. Certain seismic regions require additional reinforcement in walls. See Chapter 2, System Compatibility for referential documents.

4 Functional Requirements

4.1 Electrical Requirements

Innova System requires a specific power line, with three phase (see Illustration in Chapter 6, Power Distribution).

Table 3-13: ELECTRICAL REQUIREMENTS: system without Fluoro UPS

Model (max output power) (kW)	Line peak power (kVA)	Frequency (Hz)	Mains voltage (V)	Peak currents (A)	Standby current / phase (A)	Mains wiring	Added transformer
120	180	50	380± 10 %	243 per C1 23 per chiller 20 for C2	19	3Ph + PG	None
120	180	50	400/415± 10 %	243 per C1 23 per chiller 20 for C2	19	3Ph + PG	See note below
120	180	50	440 ± 10 %	243 per C1 23 per chiller 20 for C2	18	3Ph + PG	A 150 kVA 440/400 V self transformer
120	180	60	480 ±10 %	192 per C1 18 per chiller 16 for C2	16	3 Ph + PG	None
120	180	60 (Korea / Taiwan / Brazil...)	380/400/415 ± 10 %	243 per C1 23 per chiller 20 for C2	19	3Ph + PG	A 12 kVA xxx/ 480 V self transformer for chillers
120	180	60 (Japan)	380 to 460+/-10%	243 per C1 cabinet. 23 per chiller. 20 for C2 cabinet	19 to 17	3Ph + PG	A 150kVA xxx/ 480V self transformer

NOTE: About X-Ray tube chillers, chiller voltage range details are:

- 342 VAC (323 VAC for less than 3 seconds*) to 418 VAC*, 50 Hz if the switch is on 50 Hz.
- 432 VAC (408 VAC for less than 3 seconds*) to 528 VAC*, 60 Hz if the switch is on 60 Hz.

* : A voltage drop may occasionally occur at startup and during operation.

If the main power supply is outside this range, a 12 KVA or two 6kVA self-transformer must be used to supply both Chillers.

Examples:

- With a main power supply at 480 VAC/50 Hz, use a self-transformer to supply the Chillers at 380 VAC/50 Hz,
- With a main power supply at 380 VAC/60 Hz, use a self-transformer to supply the Chillers at 480 VAC/60 Hz.

Table 3-14: ELECTRICAL REQUIREMENTS: system with Fluoro UPS UL

Model (max output power) (kW)	Line peak power (kVA)	Frequency (Hz)	Mains voltage (V)	Peak currents (A)	Standby current / phase (A)	Mains wiring	Added transformer
120	180	60	480 ± 10 %	192 per C1 18 per chiller 16 for C2	17	3 Ph + N+ PG	None
120	180	60 (Japan)	380 to 460+/-10%	243 per C1 cabinet. 23 per chiller. 20 for C2 cabinet	19 to 17	3Ph + PG	A 150kVA xxx/ 480V self transformer

Table 3-15: ELECTRICAL REQUIREMENTS: system with Fluoro UPS CE

Model (max output power) (kW)	Line peak power (kVA)	Frequency (Hz)	Mains voltage (V)	Peak currents (A)	Standby current / phase (A)	Mains wiring	Added transformer
120	180	50	380/400/415 ± 10 %	243 per C1 23 per chiller 20 for C2	20	3 Ph + N+ PG	None
120	180	60 (Korea / Taiwan / Brazil ...)	380/400/415 ± 10 %	243 per C1 23 per chiller 20 for C2	20	3 Ph + N+ PG	A 12 kVA xxx/ 480 V self transformer for chillers

NOTE: PDB maximum rating is equal to 211 kVA.

NOTICE

Line impedance should be compliant with IEC 601.2.7 Refer to the table *Max Line Impedance for feeder line between Generator cabinet and Hospital* in Chapter 6, Power and Grounding Recommendations.

NOTICE

When a Fluoro UPS is or will be installed, a Neutral line is mandatory. An IT or Delta configuration power input requires the installation of an isolation transformer (see transformer specification below).

NOTICE

With or without Fluoro UPS, for compliance with NFC15-211 (if applicable), the use of a medical grade isolation transformer is required. Distribution shall be of TNS type. (see transformer specification below).

4.1.1 Optional Isolation transformer specifications

It shall be :

- Secondary star 3Ph+N
- 150 kVA minimum
- Power distribution shall be of TNS type with Neutral grounded
- Primary-Secondary transformer voltage drop shall be less than 3.1% during following peak current:

Line V	380	400	415	480
I peak	243	233	223	192

Illustration 3-14: TNS scheme

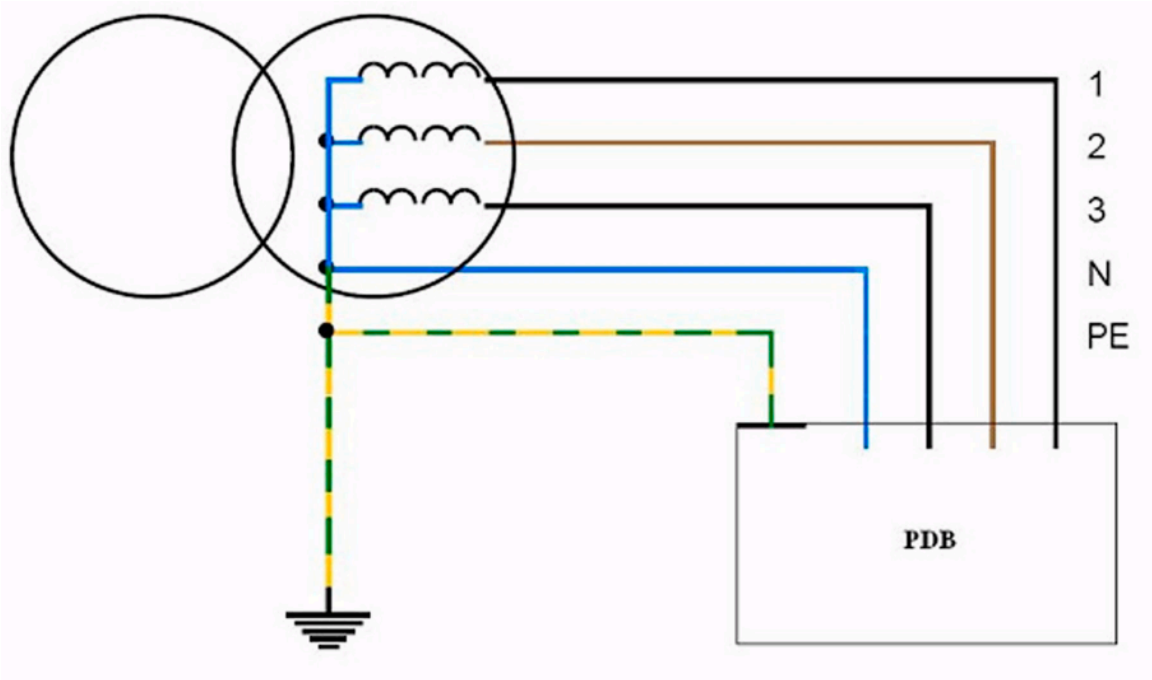

4.2 Room Speaker

The speaker must be installed out of the patient vicinity in order to not disturb the environment, to give access to the FE for maintenance operations and to medical staff to adjust the tone signal level and be able to see the power LED indicator.

4.3 Room Lighting

Requirement for lighting concern the following, general, light–technique characteristics:

- Illuminator level.
- Lighting distribution.
- Preventing the operator from being dazzled by the light (by direct light sources or by reflection on bright objects).

The Illumination level must be compliant with established lighting technical rules and be as constant as possible.

Technical room, operating room and control room shall be provided with appropriate lighting in the maintenance area (maintenance area to be considered are service workplaces). It corresponds to service areas as defined for any of the product components.

The minimum required average luminance Em shall be of 500Lx and minimum color rendering factor Ra of 80 as per IEC/EN 12464-1 (Light and lighting. Lighting of work places. Indoor work

places: Illumination requirements for indoor workplaces corresponding to assembly of medium size electrical components, e.g. control panel) for the electrical industry).

5 Emergency

During an examination, any operator can encounter two main cases of failures.

5.1 Main power supply cut

In this case, refer to Chapter 6, Physical Runs.

5.2 System failure

In the event of a system failure with a patient on table during an examination, the operator can utilize a Surgical Imaging mobile unit to finish the examination.

In this case a wall outlet single phase + ground is required to feed the mobile. It is also requires a free space around the patient table to proceed with the mobile instead of Innova LC Positioner. The table has to rotate to 90º. The minimum room width of 4400 mm (14.5 in) may not be sufficient for this scenario.

6 Insite

The preferred Insite connection uses a broadband modem. This connection requires a dedicated Ethernet Jack (RJ45) that must be located less than 1 meter (3 feet) from the C1 frontal cabinet

For complete descriptions of the GEHC connectivity solutions, please refer to the Broadband Solutions catalogue available through your local GEHC sales and service representative.

Connectivity Process and pre-installations checklists are available in the Broadband Connectivity PIM available through your local GEHC sales and service representative.

The analog modem is also fitted inside the C1 cabinet. A dedicated phone line with a local socket used only for a connection to a modem will preferably be located close to the cabinet. The phone outlet must be located less than 1 meter (3 feet) from the C1 cabinet

A modem compliant to each country is supplied with the Innova System.

InSite requires an Internet Address connecting it to the Innova System. This address must be available before installing the system. A request form has been defined. For more information, please refer to Chapter 8, IP Addressing Process or contact your GE Healthcare OLC representative.

NOTICE

The C1 frontal cabinet comes equipped with a Firewall unit. The hospital network must be capable of connecting to this firewall. In the case that it cannot be, please contact GE Healthcare to discuss alternatives.

Chapter 4 Room Layouts

1 Room Layout Considerations

1.1 Service Access

Allow appropriate space for service access of equipment. Consult component pre–installation directions for clearance information.

1.2 Clinical Access

Make sure that you plan the room with the following clinical access requirements:

- Provide easy access to the patient table. Stretchers and other mobile hospital equipment must reach the table quickly.
- Gantries installation shall make a provision so that the clearance is 500 mm (19.7in) around the LC and LP4 gantries.
- The layout of the table in the room shall make a provision so that clearance between maximum table position (head side) and any object in the room (e.g. wall, device) be superior to 500 mm (19.68 in) (650 mm (25.5 in) if Head Extender is used).
- Provide sufficient space around the patient table for the unimpeded conduct of CPR (Cardiac Pulmonary Resuscitation). With the table in this position, the table must be capable of rotating +/- 45°.
- Clinicians at the patient table must be able to communicate with assistants in the control area.
- There must be an unrestricted view of the video monitors and physiological monitoring equipment from the vascular table.
- Operators in the control area must have easy access to the control console. However, position the controls (including handswitches) so that the operator cannot take exposures while looking around or standing outside the control booth’s lead glass window.
- Operators in the control area must have easy access to video recorders and injector programmers, film and video storage cabinets, and service and operating manuals.
- Consult customer on the number and location of nonelectrical lines (air, oxygen, vacuum, water, etc.) in the vascular room.

1.3 Peripheral Equipment

Consult hospital personnel regarding additional space requirements for the following types of hospital equipment:

- Storage cabinets.
- Sinks.
- Oxygen stations.
- IV apparatus.
- Injectors.
- Heart monitoring equipment.
- Crash cart.

1.4 Emergency Stop

It is recommended to install, in an accessible location, an additional EPO button that allows the instantaneous switching off of all power from the System (EXCEPT THE INPUT CABLE OF THE

3kVA UPS FOR CE CONFIGURATION WITHOUT FLUORO UPS), including UPS and Fluoro UPS outputs.

To remove input power from THE INPUT CABLE OF THE 3kVA UPS (FOR CE CONFIGURATION WITHOUT FLUORO UPS), turn OFF the PDB main breaker

Protect the Emergency Stop from accidental actuation.

1.5 Patient Environment Equipment

The components that may be installed within patient vicinity need to be medical equipment (”patient vicinity is defined in the standardization as a space within the room 1.83 m (6 ft) beyond the perimeter of the examination table and extending vertically 2.29 m (7 ft, 6 in) above the floor.”). For the Innova System, the equipment are:

- Table
- C–arm
- Monitors
- Injector

1.6 Recommended Room Lighting

Illustration 4-1:

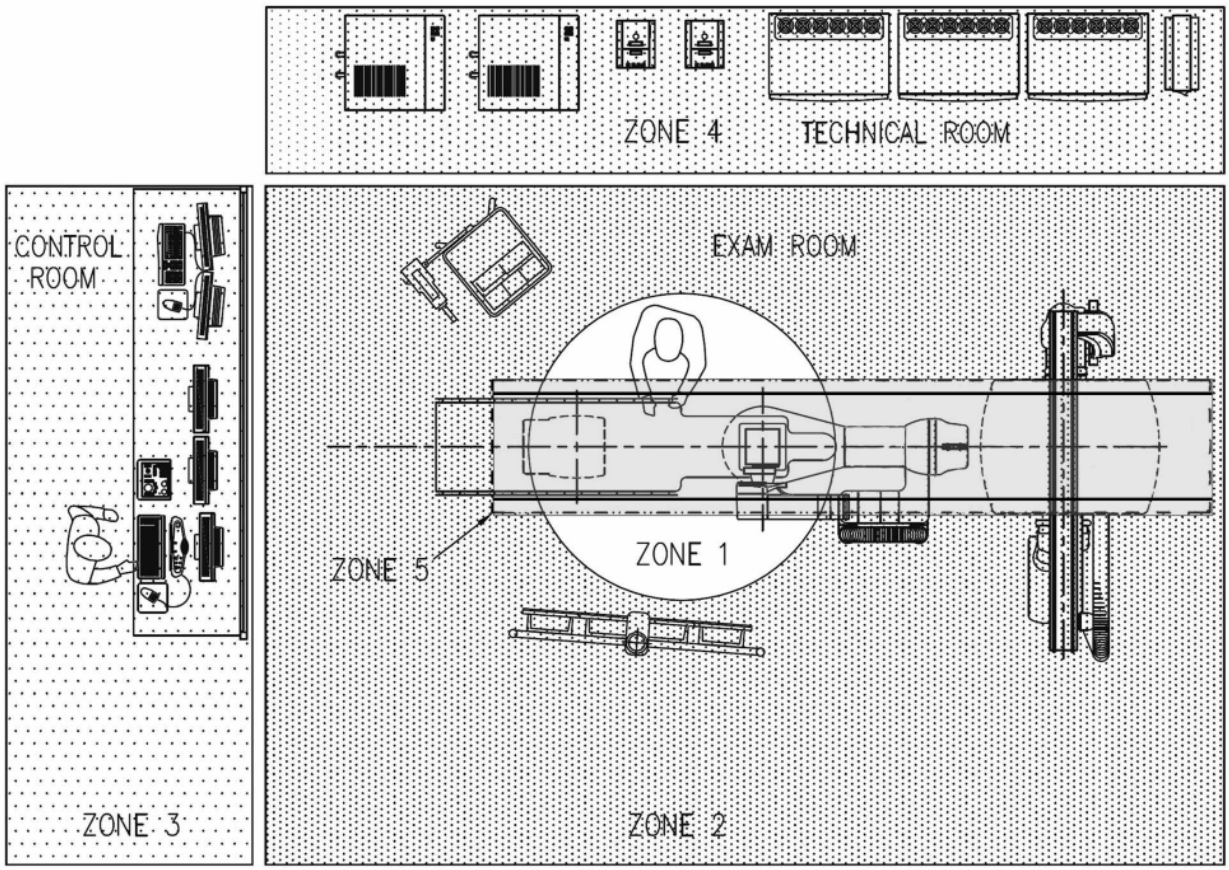

Zone 1: Intensive lighting needed by operator. Manually cut not located at false ceiling level.

Zone 2: Variable lighting without specular reflection on display and monitor screens. Indirect lighting but preferable from ceiling. Automatically cut by the Innova system.

Zone 3: Variable lighting without artifact on display and monitor screens. manually cut.

Zone 4: Normal lighting manually cut. (For maintenance).

NOTICE

Zone 5: Nothing is permitted in this zone, that means:

- no mounting hardware can protrude below the finished ceiling height (top surface of LP4 stationary rails), such as Unistrut mounting bolts, support brackets, sprinklers, air vents, etc.

1.7 Preference Cabinet locations

NOTE: This is applicable for all types of cabinets (including PDB).

The clear width of the service area in front of the cabinet doors to insure electrical safety shall be at least 0.9 m. In cases where 2 cabinets are installed face to face (both sides of the access way), the clear width shall be at least 1.2 m.

Illustration 4-2:

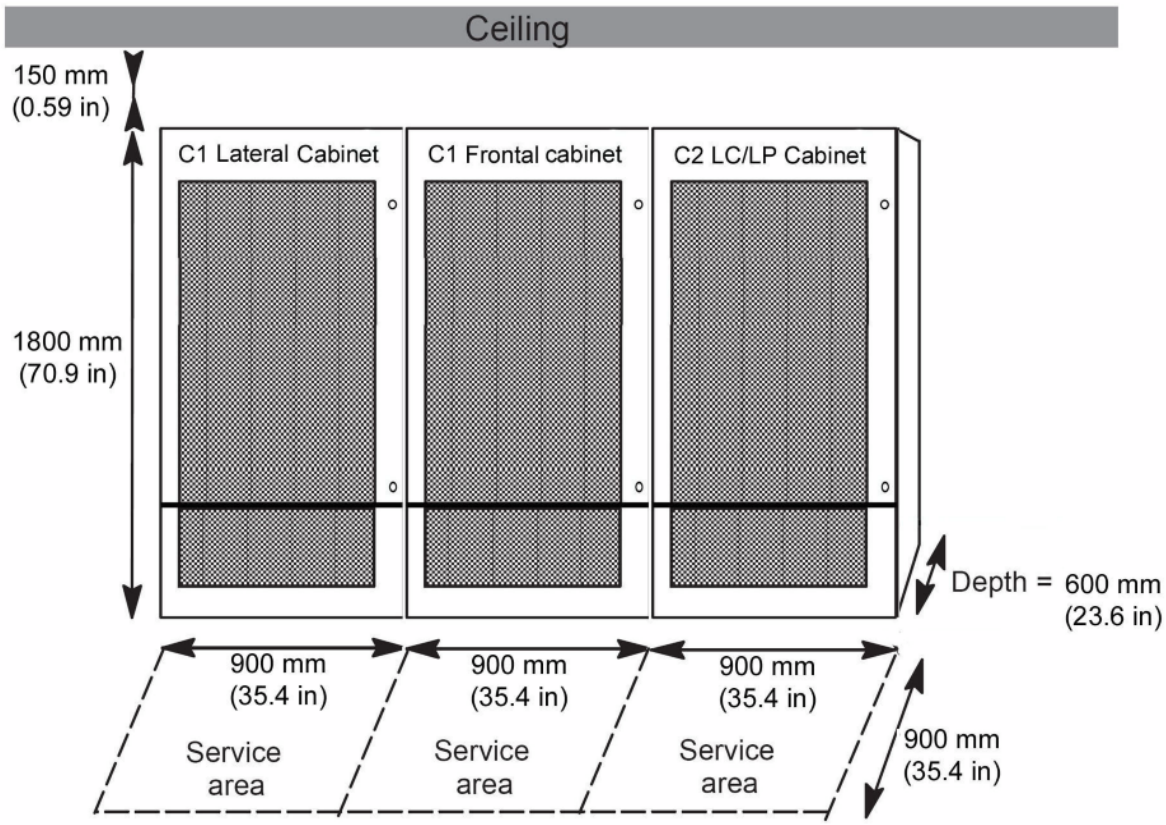

NOTE: The order of the cabinets above is C1 frontal, C1 lateral and C2 cabinets. This is just an example, cabinets can follow different orders.

CAUTION

The service area dimensions shown above are minimum requirements. Service areas must comply with local regulations if more stringent.

1.8 Layout Constraints

Table 4-1: System Layout constraints Technical and Exam room on same floor

Location	Constraint Name	Parameter	Specification	Comment
Technical room	Cabinets location	Maximum relative distance	9 m (29 ft, 6 in)	Make sure to provide enough space for storing extra cable length (e.g. Plinth)
Technical room	Tube chillers location		The chiller shall be no more than 5 m (15 feet) below or 8 m (25 feet) above the X-ray tube	

Location	Constraint Name	Parameter	Specification	Comment
Technical room	Detector conditioner location		In tech room Max. 3 m (9 ft, 10 in) below LP4 rails	
Technical room	PDB location		In Tech Room	
Technical to Exam room	Distance between LC foot and C1 or C2 entry.	Relative distance	19.5 m (64 ft)	Tech and Exam room on same floor. 22 m (72 ft) for HV cables.
Technical to Exam room	Distance between LC foot and tube chiller	Relative distance	22 m (72 ft)	Tech and Exam room on same floor
Technical to Exam room	Distance between LC foot and Detector Conditioner	Relative distance	22 m (72 ft)	Tech and Exam room on same floor
Technical to Exam room	Distance between LP4 wall-box and C1 or C2 entry	Max relative distance (proj. on floor)	10.5 m (34 ft, 5 in)	Tech and Exam room on same floor
Technical to Exam room	Distance between LP4 wall-box and tube chiller	Max relative distance (proj. on floor)	11 m (36 ft, 1 in)	Tech and Exam room on same floor
Technical to Exam room	Distance between LP4 wall-box and Detector Conditioner	Max relative distance (proj. on floor)	19 m (62 ft, 4 in)	Tech and Exam room on same floor
Exam room	Minimum rail length past iso-centre towards foot end	Length	1.3 m (4 ft, 2 in)	LP4 parking at patient foot end not allowed

Table 4-2: Layout constraints Technical on above floor with respect to Exam room

Location	Constraint Name	Parameter	Specification	Comment
Technical room	Cabinets location	Maximum relative distance	9 m (29 ft, 6 in)	Make sure to provide enough space for storing extra cable length (e.g. Plinth)
Technical room	Tube chillers location		The chiller shall be no more than 5 m (15 feet) below or 8 m (25 feet) above the X-ray tube	
Technical room	Detector conditioner location		In tech room Max. 20 cm (7.9 in) above LP4 rails	
Technical room	PDB location		in Tech Room	
Technical to Exam room	Distance between LC and C1 or C2 entry.	Maximum relative distance	16.5 m (54 ft, 1 in)	Tech on floor above Exam room (assume LC foot to ceiling 3 m (9 ft, 10 in))
Technical to Exam room	Distance between LC foot and tube chiller	Relative distance	19 m (62 ft, 4 in)	Tech on floor above Exam room (assume LC foot to ceiling 3 m (9 ft, 10 in))
Technical to Exam room	Distance between LC foot and Detector Conditioner	Relative distance	19 m (62 ft, 4 in)	Tech on floor above Exam room (assume LC foot to ceiling 3 m (9 ft, 10 in))
Technical to Exam room	Distance between LP4 wall-box and C1 or C2 entry	Relative distance	13.5 m (44 ft, 3.5 in)	Tech on floor above Exam room
Technical to Exam room	Distance between LP4 wall-box and tube chiller	Maximum relative distance	14 m (45 ft, 11 in)	Tech on floor above Exam room
Technical to Exam room	Distance between LP4 wall-box and Detector Conditioner	Relative distance	22 m (72 ft, 2 in)	Tech on floor above Exam room

Location	Constraint Name	Parameter	Specification	Comment
Exam room	minimum rail length past iso-centre towards foot end	Length	1.3 m (4 ft, 7 in)	LP4 parking at patient foot end not allowed

For exam and control rooms, several configurations are possible.

The pre–installation instructions shall define a room layout where the location of the remote controls versus the moving parts of equipment. This layout shall define the maximum distance between the remote control location and equipment and the axis of the equipment (L axis) versus the remote controls (dead angles concern).

WARNING

CARRIAGE COVERS CAN ENCLOSE DUST PARTICLES. CARE SHOULD BE TAKEN TO AVOID PROPAGATION.

IT IS RECOMMENDED TO AVOID DIRECT AIR FLOW BETWEEN LP RAILS.

NOTE: Motion controls installed in remote location from the table shall be installed at a location where all the positioner axis are visible by the operator.

Refer to Illustrations in Room Layout Drawings to see possible exam / control rooms layouts.

2 Room Layout Drawings

WARNING

LOCATION IN TECHNICAL ROOM FOR ELECTRICAL CABINETS IS MANDATORY. THE ELECTRONIC CABINETS (C1, C2, COOLIX 4000 CHILLER, DETECTOR CHILLER AND FLUORO UPS WHEN INSTALLED) INCLUDE FANS THAT ARE CREATING AIR–CIRCULATION OF PULSED–AIR. WHEN THIS PULSED AIR IS IN AN ENVIRONMENT THAT MAY CONTAIN AIRBORNE PATHOGENS LIKE AN EXAM ROOM/CONTROL ROOM, THERE IS A RISK OF TRANSMISSION OF THESE AIRBORNE PATHOGENS FROM PATIENTS TO OTHER PATIENTS OR CLINICAL PERSONNEL (NOSOCOMIAL DISEASES). TO REDUCE THIS RISK, THE ELECTRONIC CABINETS MUST BE INSTALLED IN A ROOM SEPARATED FROM EXAM ROOM/CONTROL ROOM, I.E., TECHNICAL ROOM.

Table 4-3: Exam room dimensions

Room Dimensions	Length x Width	Ceiling Height
Recommended:	11570 mm x 8000 mm (38 ft 0 in x 26 ft 2 in)	2845 mm ± 5 mm (9 ft 4 in ± 0.2 in) is mandatory ceiling height
Minimum:	6900 mm x 4400 mm (22 ft 8 in x 14 ft 5 in)	

Table 4-4: Room Layout components (see Illustration 4-3):

1		3 kVA UPS cabinet
2	PDB	Power Distribution Panel
3	C1F	C1 Frontal Cabinet
4	C2	Positioner cabinet
5	C1L	C1 Lateral cabinet
6	F-UPS	Fluoro UPS
7	Det Cond LAT	Lateral Detector conditioner
8	Chiller LAT	Lateral Tube chiller
9	Det Cond FRT	Frontal Detector conditioner
10	Chiller FRT	Frontal Tube Chiller
11		LP4 stationary rails
12		Cable drape rail
13	LP4	Lateral Gantry
14	LC	Frontal Gantry
15		6 or 8 LCD Monitor suspension
16		Counter balanced eye or thyroid shield
17	TBL	Omega table
18		Customer supplied storage cabinet
19		XT Stationary Rails
20	WBC1	Operators console
21		AW workstation

22		IVUS Volcano ready kit

NOTE: The phone and/or Network drop outlet must be located less than 1 meter (3 feet) from the C1 Frontal Cabinet (20).

Illustration 4-3: Room Layout for Innova System

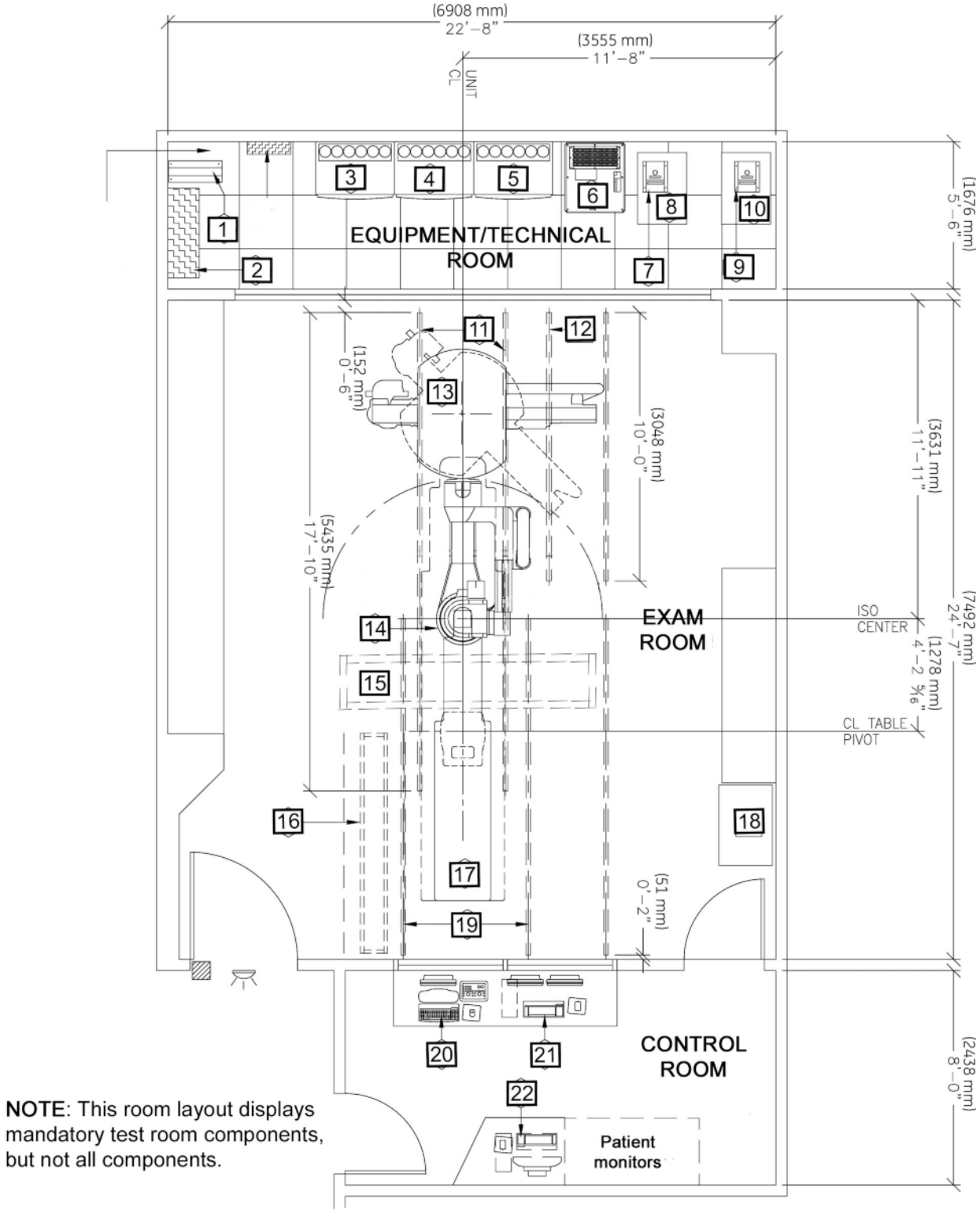

NOTE: This room layout displays mandatory test room components, but not all components.

3 IVUS Option Room Layout

Illustration 4-4: IVUS Rev 1

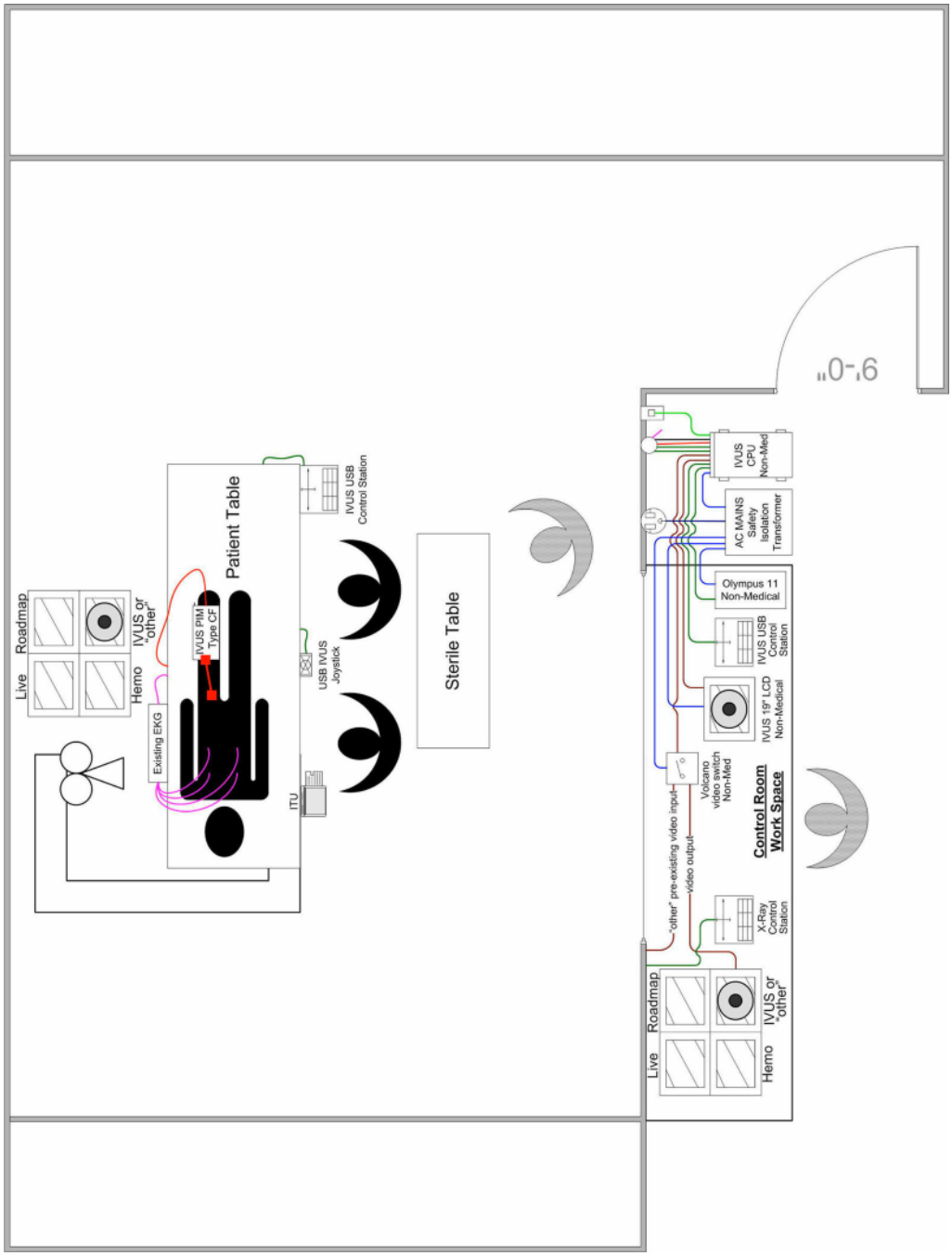

Illustration 4-5: IVUS Rev 2

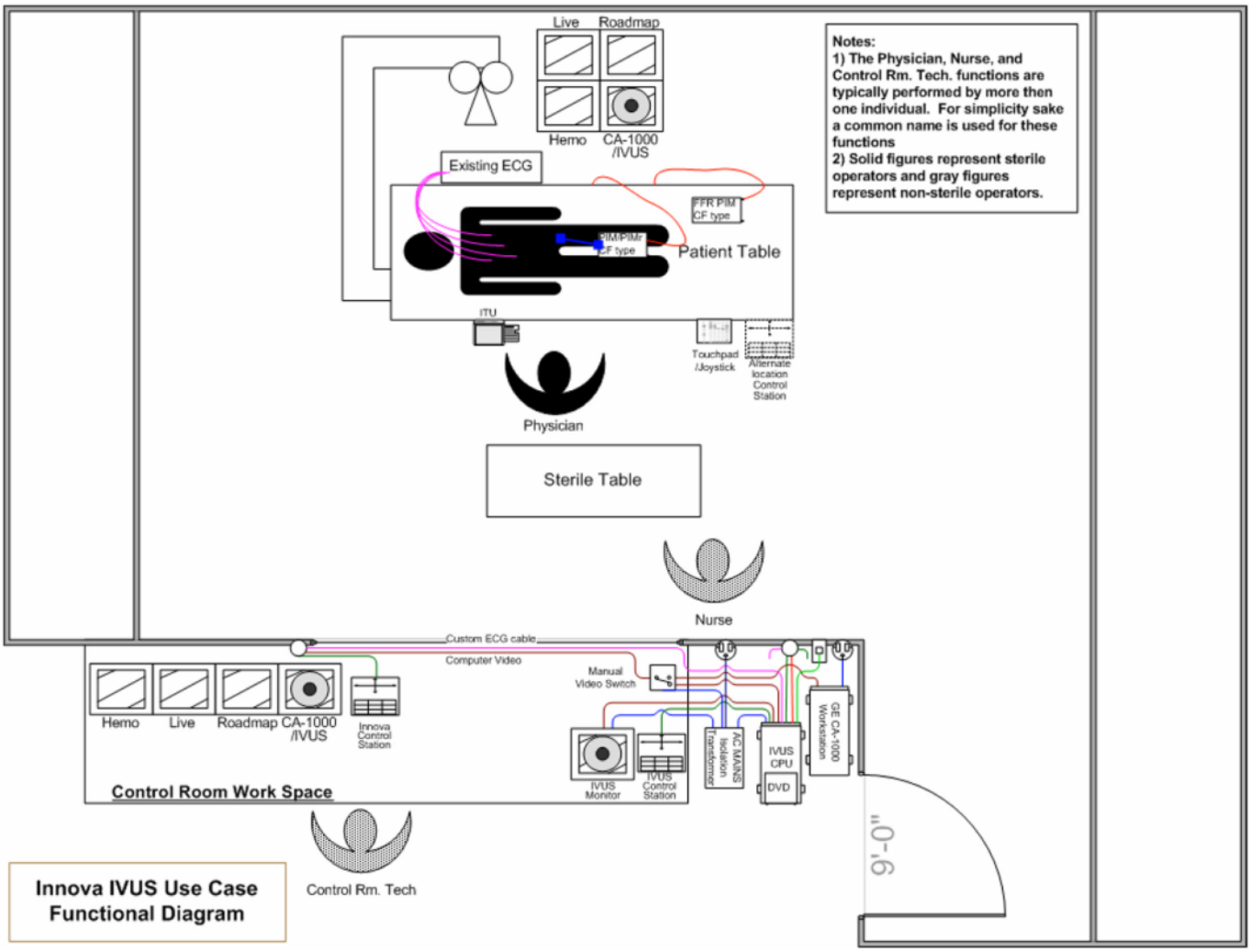

This page left intentionally blank.

Chapter 5 Physical Characteristics

1 Dimension Drawings

Refer to this section for the dimensional drawings of the components of the Innova 2121-IQ and 3131-IQ systems. This section also contains the LC, LP4 and patient table sweep volume curves. These systems include:

Innova LC/LP Positioner, Omega Table, C2 LC/LP Cabinet, C1 Frontal Cabinet / C1 Lateral Cabinet, 3kVA cabinets UPS, Chillers, Optional Fluoro UPS and PDB (main disconnect). In addition, refer to this section for Positioner/table relative position drawings.

Table 5-1:

Title	QTY	Illustration
Exam Room		
Innova LC Positioner Dimensions:		
- Side View	1	Illustration 5-1
- Top View		Illustration 5-2
- Front View		Illustration 5-3
Innova LP4 Positioner Dimensions: - Side View	1	Illustration 5-4
Innova LP4 Positioner Dimensions: - Top View		Illustration 5-5
Innova LP4 Positioner Dimensions: - Front View		Illustration 5-6
Omega IV Table Dimensions	1	Illustration 5-7
Omega V Table Dimensions	1	Illustration 5-8
Omega Table side clearence (CPR access)		Illustration 5-9
Gas Box Outlets Omega Table	1	Illustration 5-10
Innova LC/LP Positioner And Omega Patient Table Relative Positions: - Side View	1	Illustration 5-11
Innova LC/LP Positioner And Omega Patient Table Relative Positions: - Top View	1	Illustration 5-12
LP4 Positioner Cable Drape Length	1	Illustration 5-13
Technical Room		
C2 LC/LP Cabinet Dimensions	1	Illustration 5-14
C1 Frontal Cabinet Dimensions	1	Illustration 5-15
C1 Lateral Cabinet Dimensions	1	Illustration 5-16
Coolix 4000 Chiller Dimensions and Floor Space Diagram	2	Illustration 5-17
Thermo-Con Detector Conditioner (and Mounting brackets) Dimensions	2	Illustration 5-18
3 kVA Cabinets UPS - models 9125 and 9130	1	Illustration 5-19 and Illustration 5-20
Fluoro UPS Cabinets (Optional)	1 (UPS UL)	Illustration 5-21
	1 (UPS CE)	Illustration 5-22
Control Room		
DL Keypad Dimensions	1	Illustration 5-23
DL Image Monitor Dimensions	1	Illustration 5-24
VCIM	1	Illustration 5-25

Illustration 5-1: Innova LC Positioner Dimensions - Side View

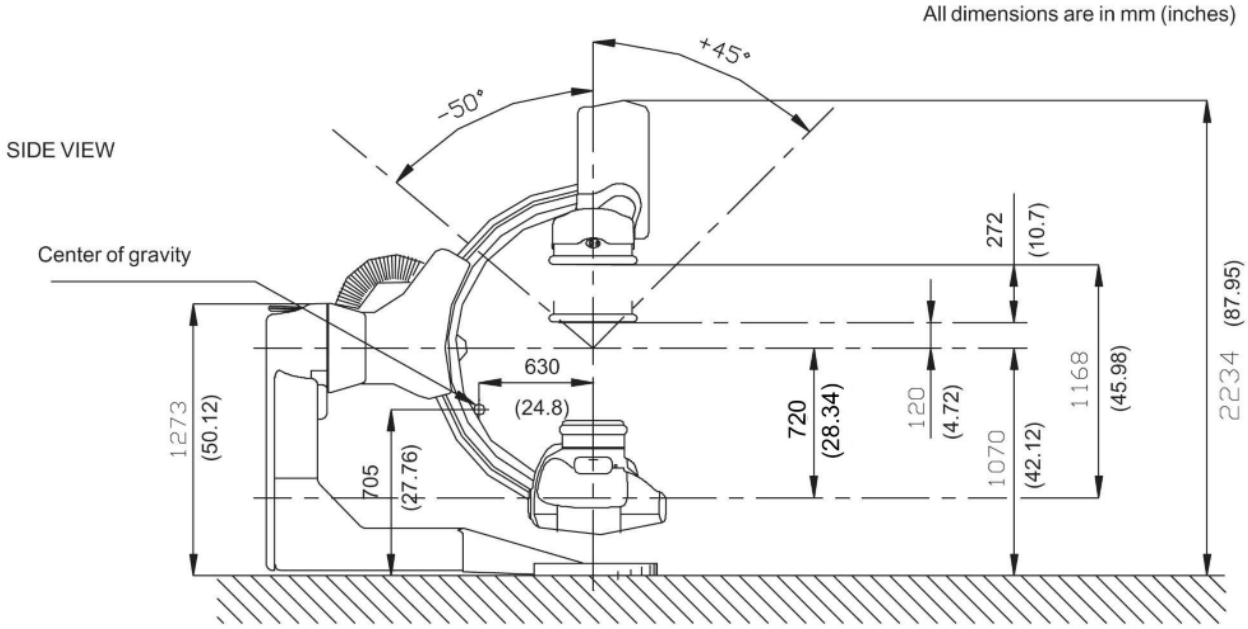

Illustration 5-2: Innova LC Positioner Dimensions - Top View

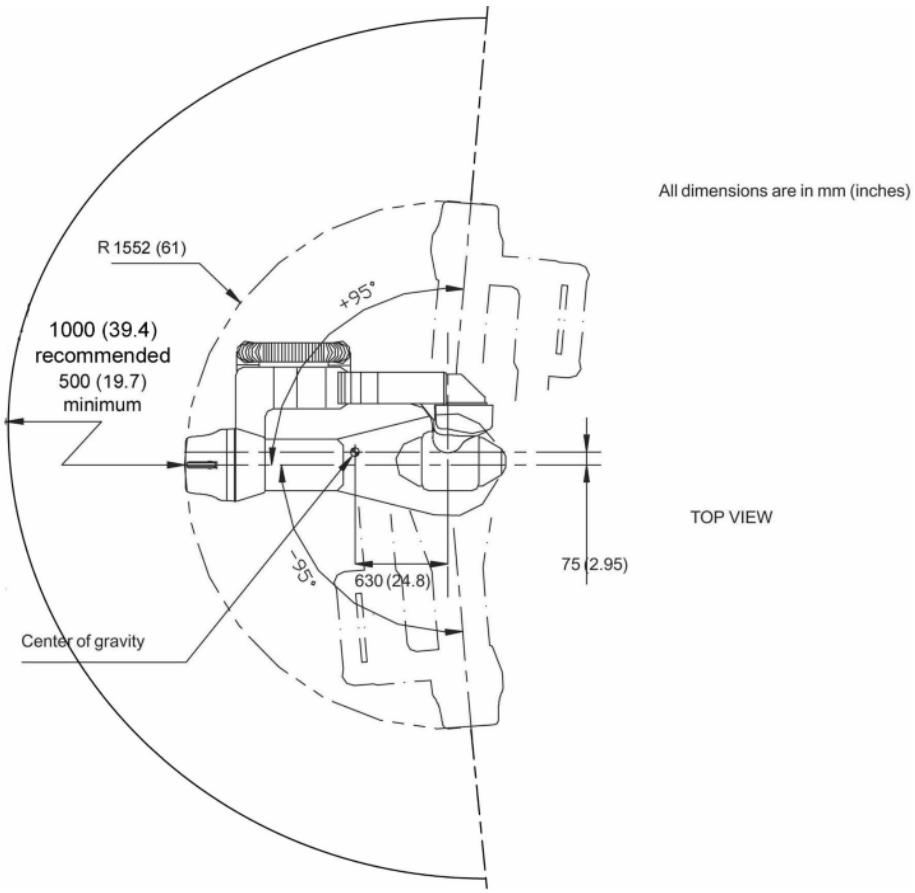

Illustration 5-3: Innova LC Positioner Dimensions - Front View

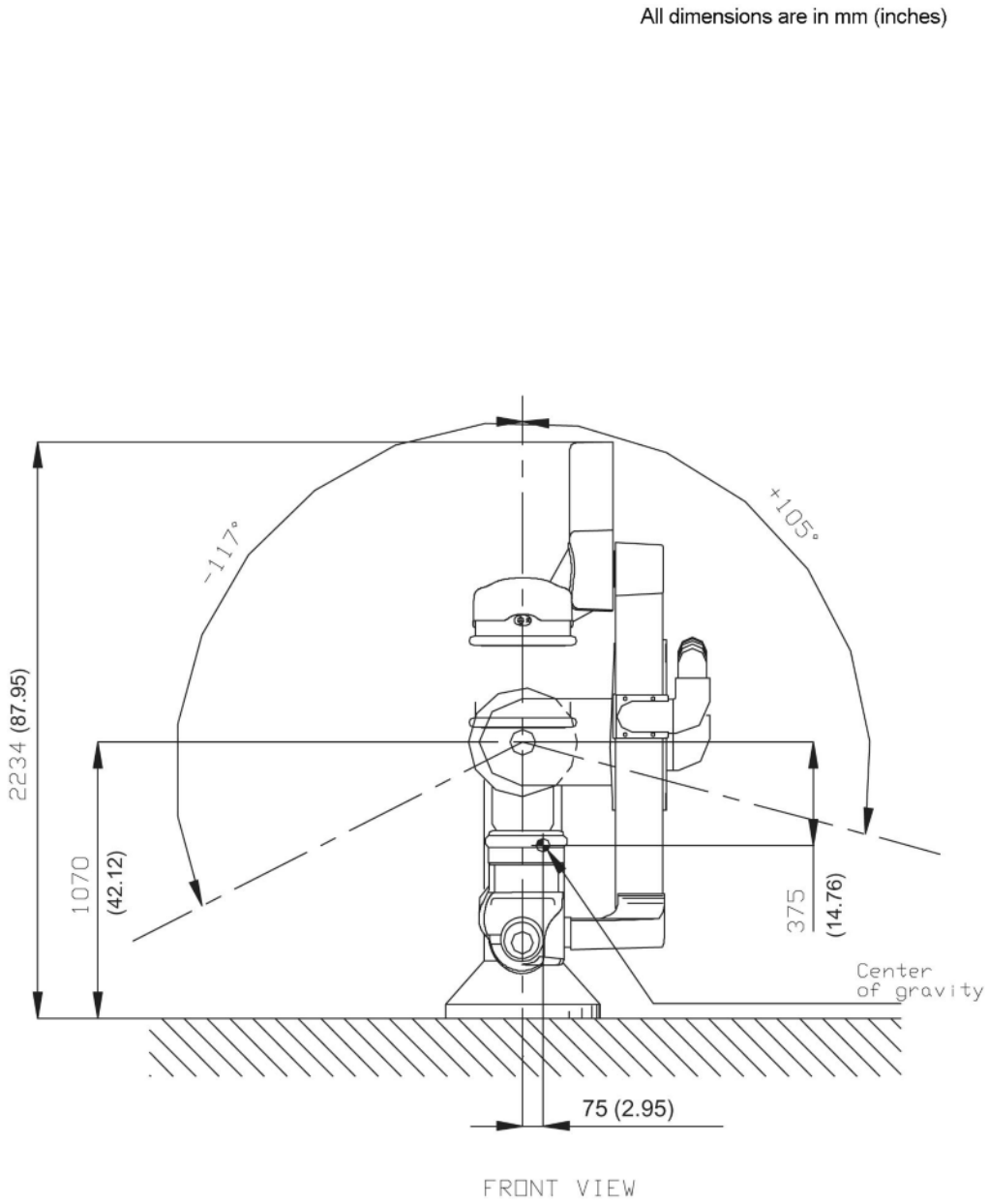

Illustration 5-4: Innova LP4 Positioner Dimensions - Side View

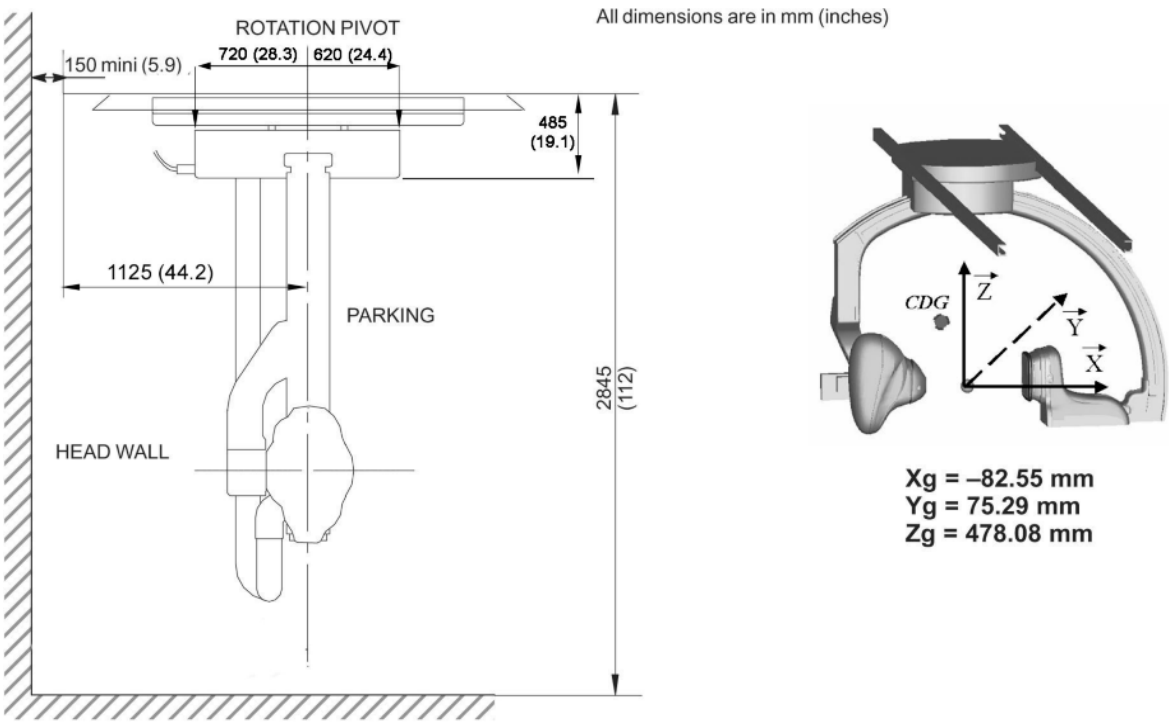

Illustration 5-5: Innova LP4 Positioner Dimensions - Top View

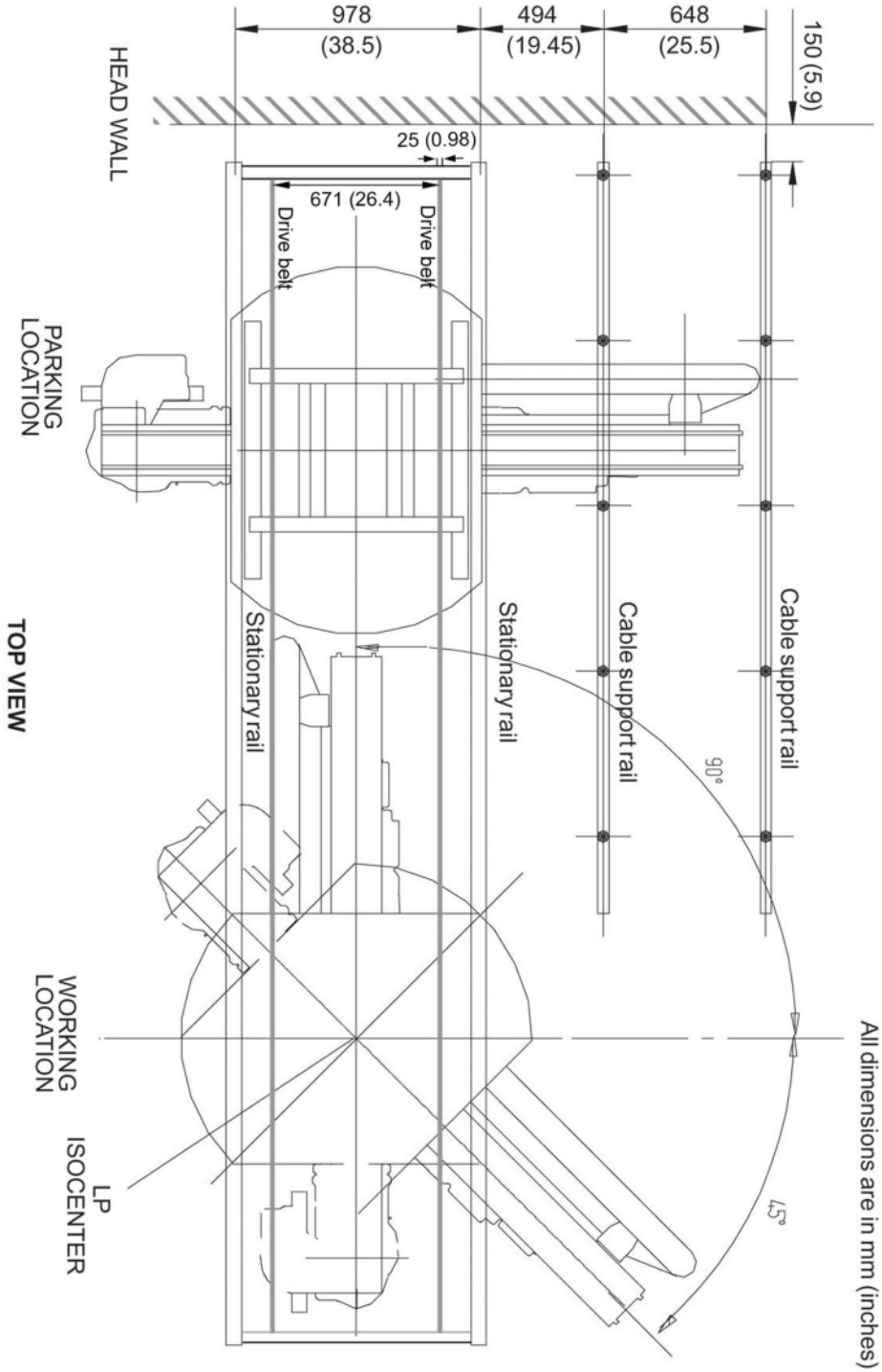

Illustration 5-6: Innova LP4 Positioner Dimensions - Front View

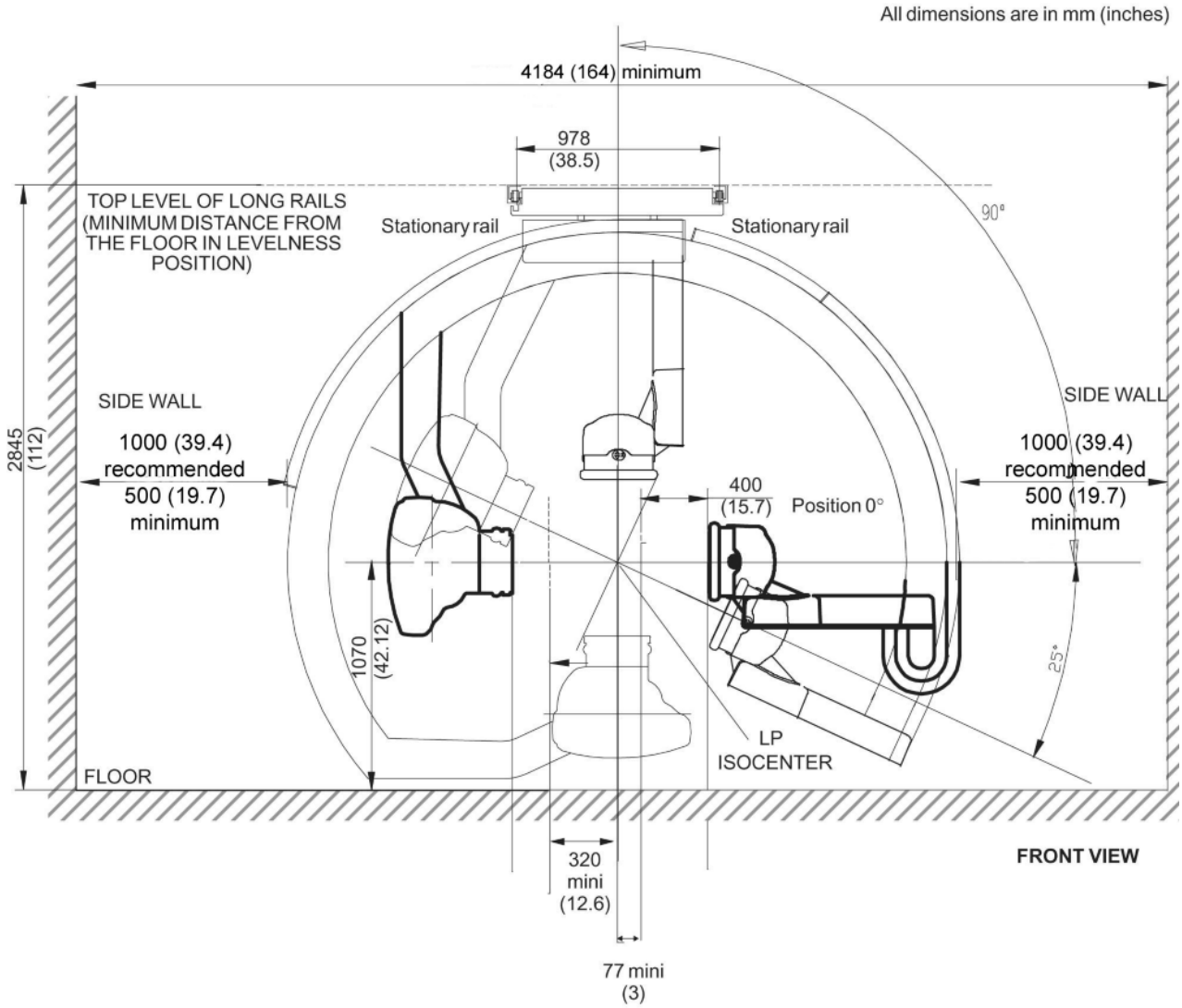

Illustration 5-7: Omega IV Table Dimensions

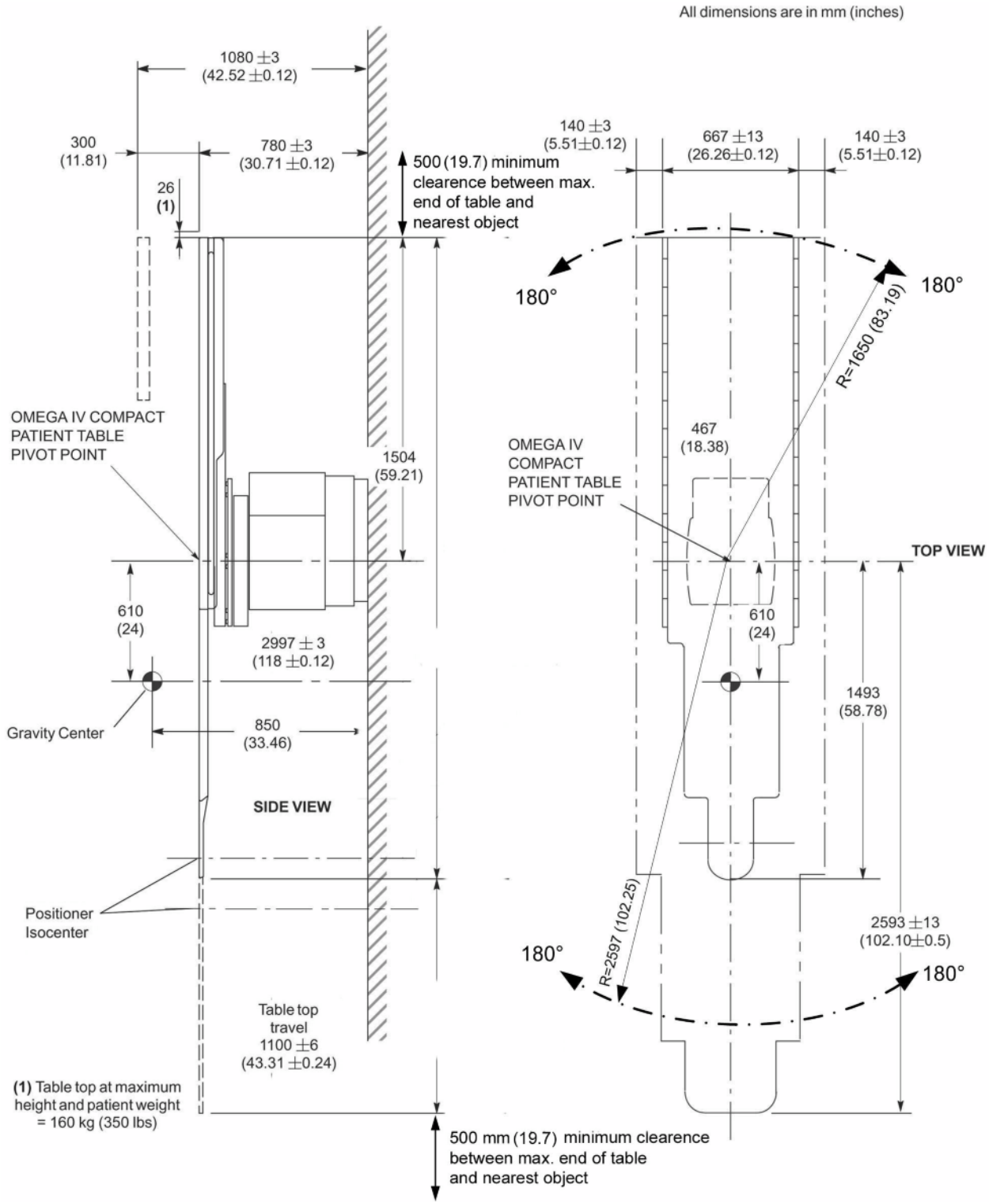

NOTE: The 500 mm (19.7 in) minimum clearance between the **table foot end** and nearest object must take Into account any table devices installed on the table end rail. If there are any devices installed on the table foot end, the width of these devices must be added to the existing 500 mm (19.7 in) to maintain absolute minimum distance of 500 mm (19.7 in).

Illustration 5-8: Omega V Table Dimensions

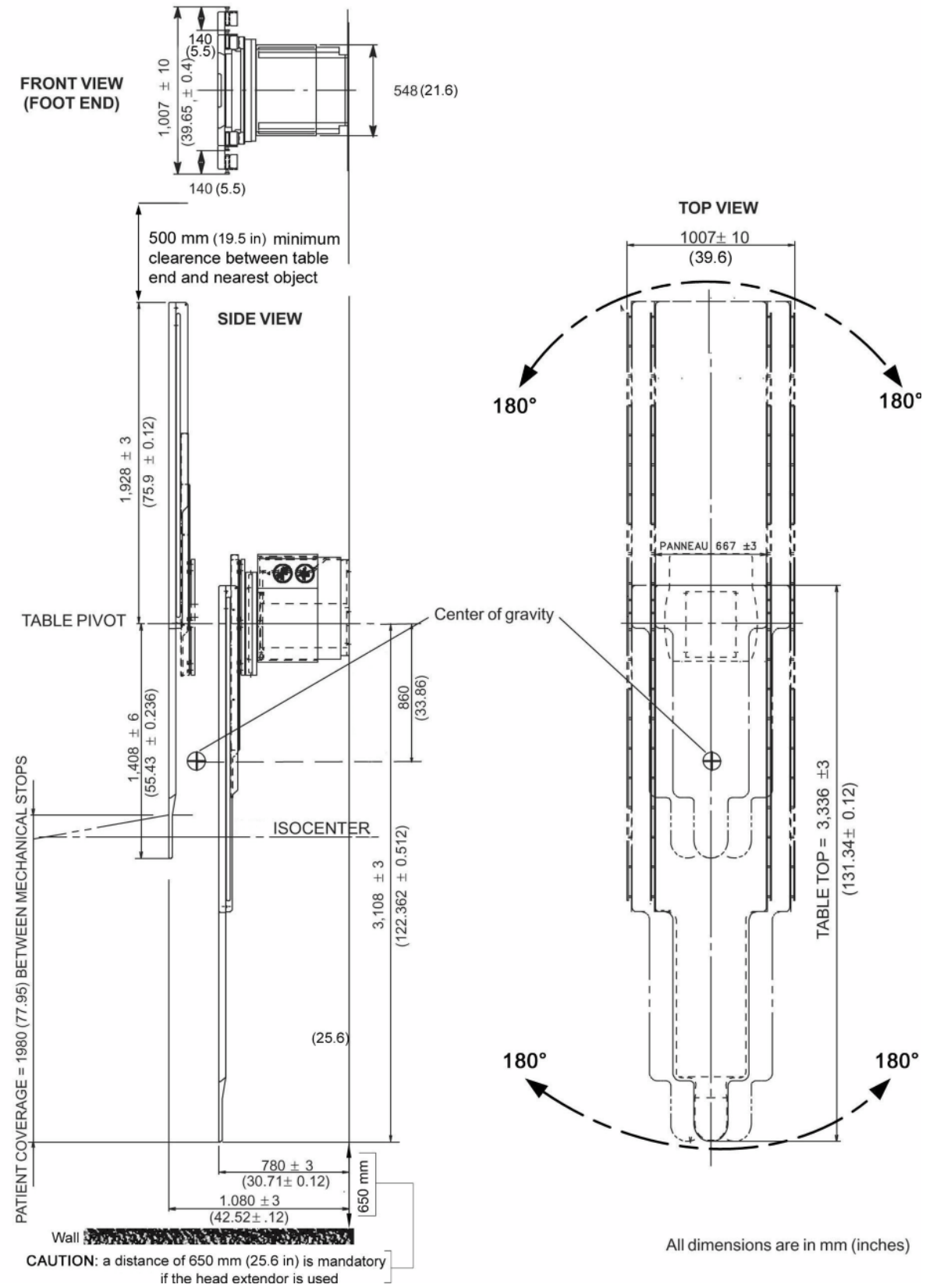

NOTE: The 500 mm (19.7 in) minimum clearance between the **table foot end** and nearest object must take Into account any table devices installed on the table end rail. If there are any devices installed on the table foot end, the width of these devices must be added to the existing 500 mm (19.7 in) to maintain absolute minimum distance of 500 mm (19.7 in).

Illustration 5-9: Omega Table side clearence (CPR access)

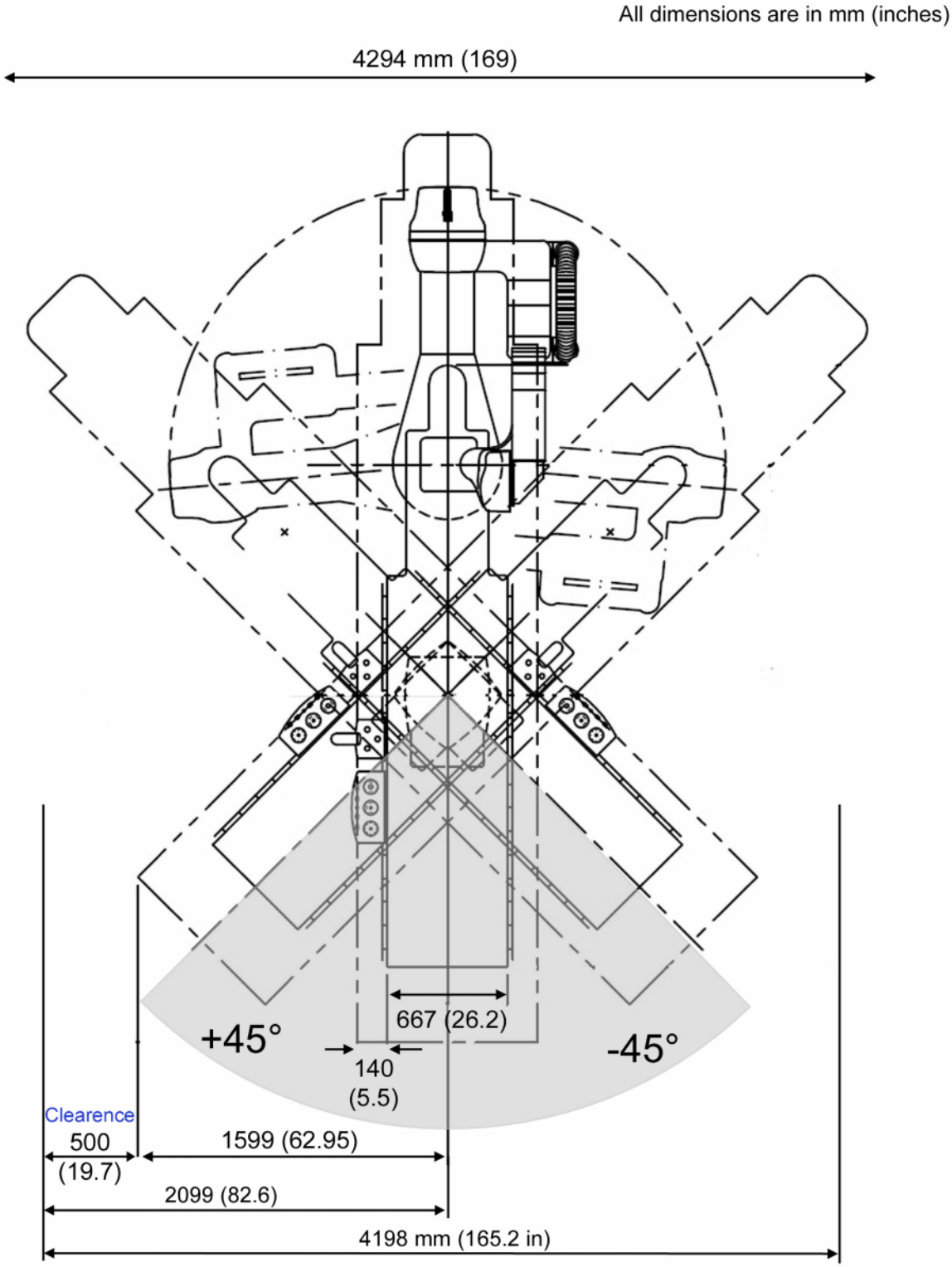

Illustration 5-10: Gas box outlets Omega table

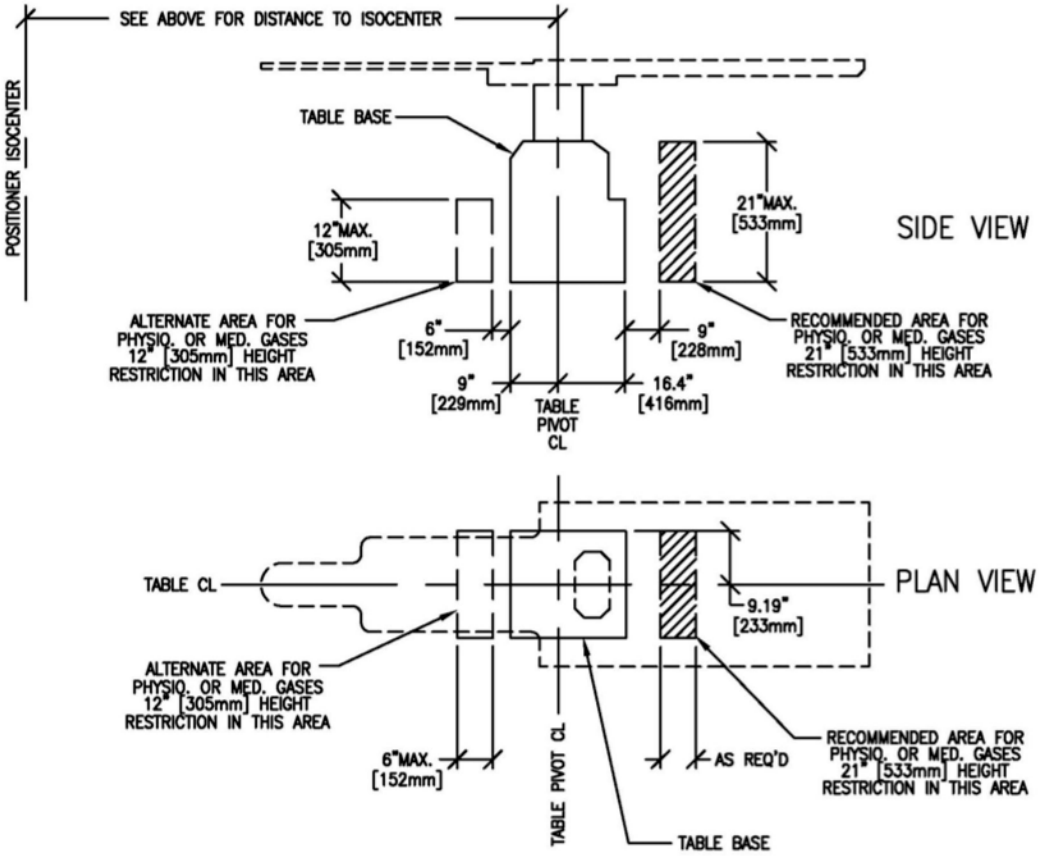

Illustration 5-11: Innova LC/LP Positioner And Omega Patient Table Relative Positions - Side View

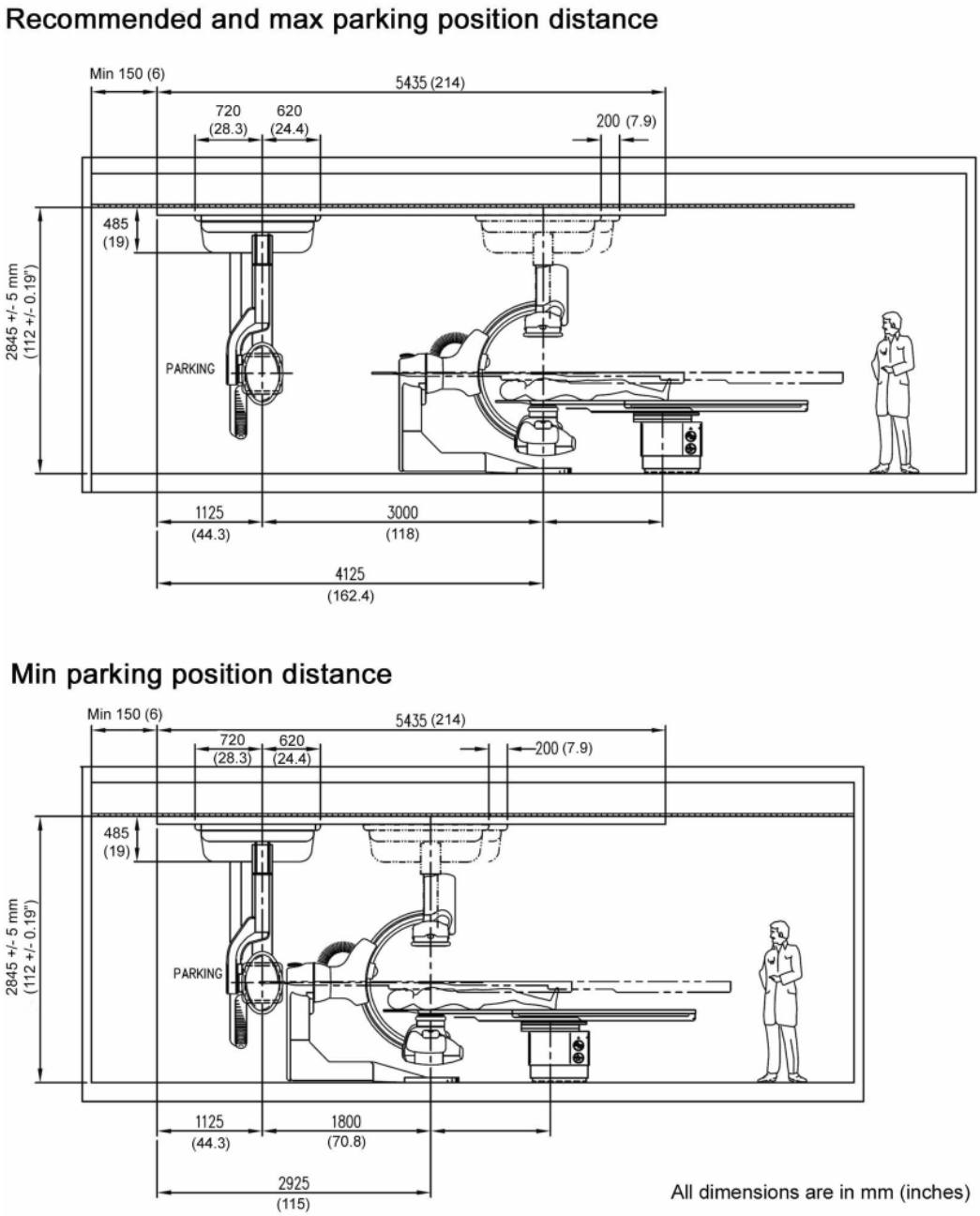

NOTE: (1) For LC isocenter to Table distance, refer to Table 5-2.

(2) in the case of LP4 Off iso feature installed, the LP4 will work in the range - 200 mm (7.9 in) and 200 mm (7.9 in) from isocenter.

(3) LP4 parking not allowed at patient foot end.

Illustration 5-12: Innova LC/LP Positioner and Omega Patient Table Relative Positions - Top View

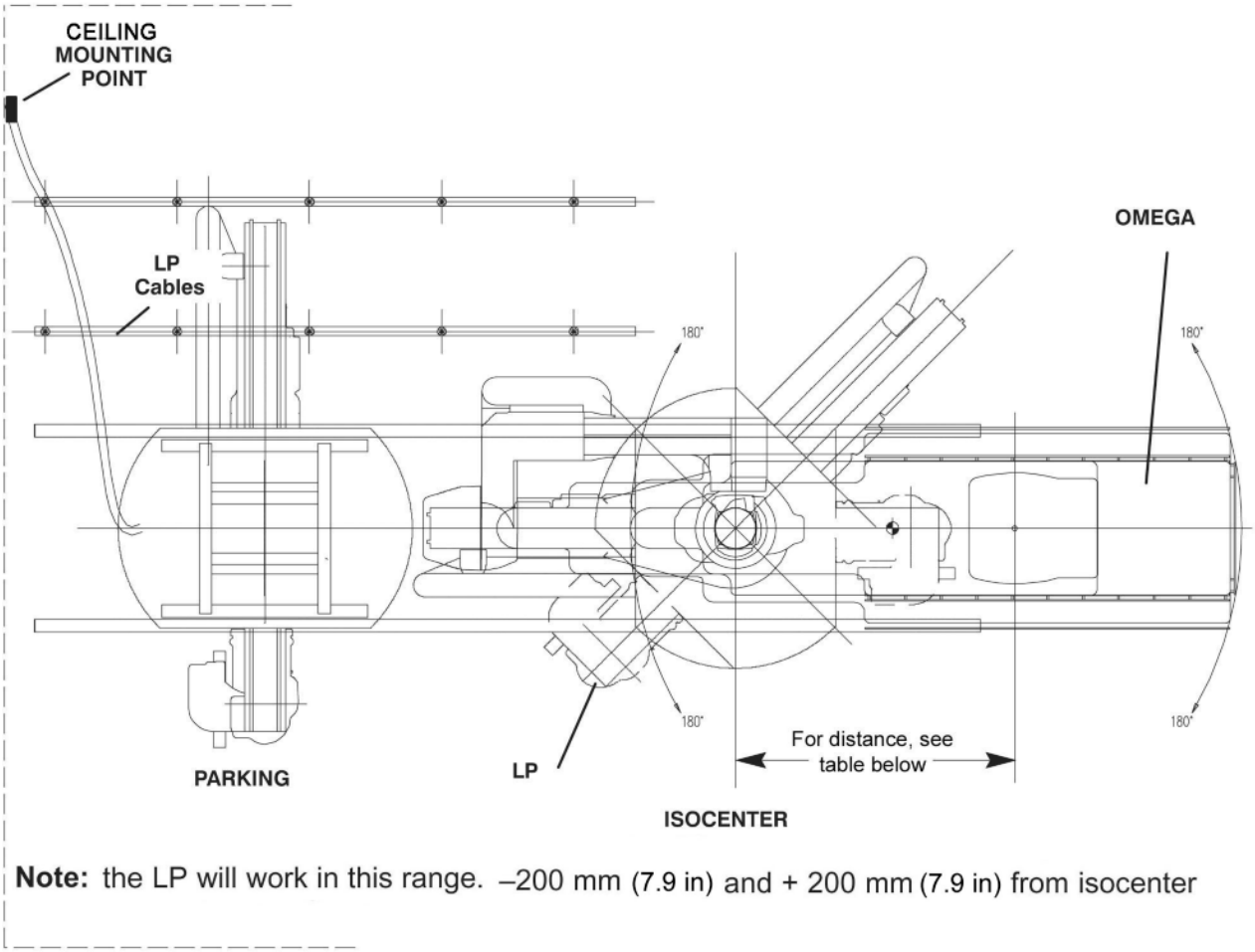

Table 5-2: Patient Table - LC isocenter distances

	ANGIO / CARDIO	CARDIO / NEURO
Omega IV	NA	1395 mm (54.9 in)
Omega V - non motorized	1278 mm (50.3 in)	1395 mm (54.9 in)
Omega V - motorized	1278 mm (50.3 in)	1395 mm (54.9 in)

Illustration 5-13: LP4 Positioner Cable Drape Length

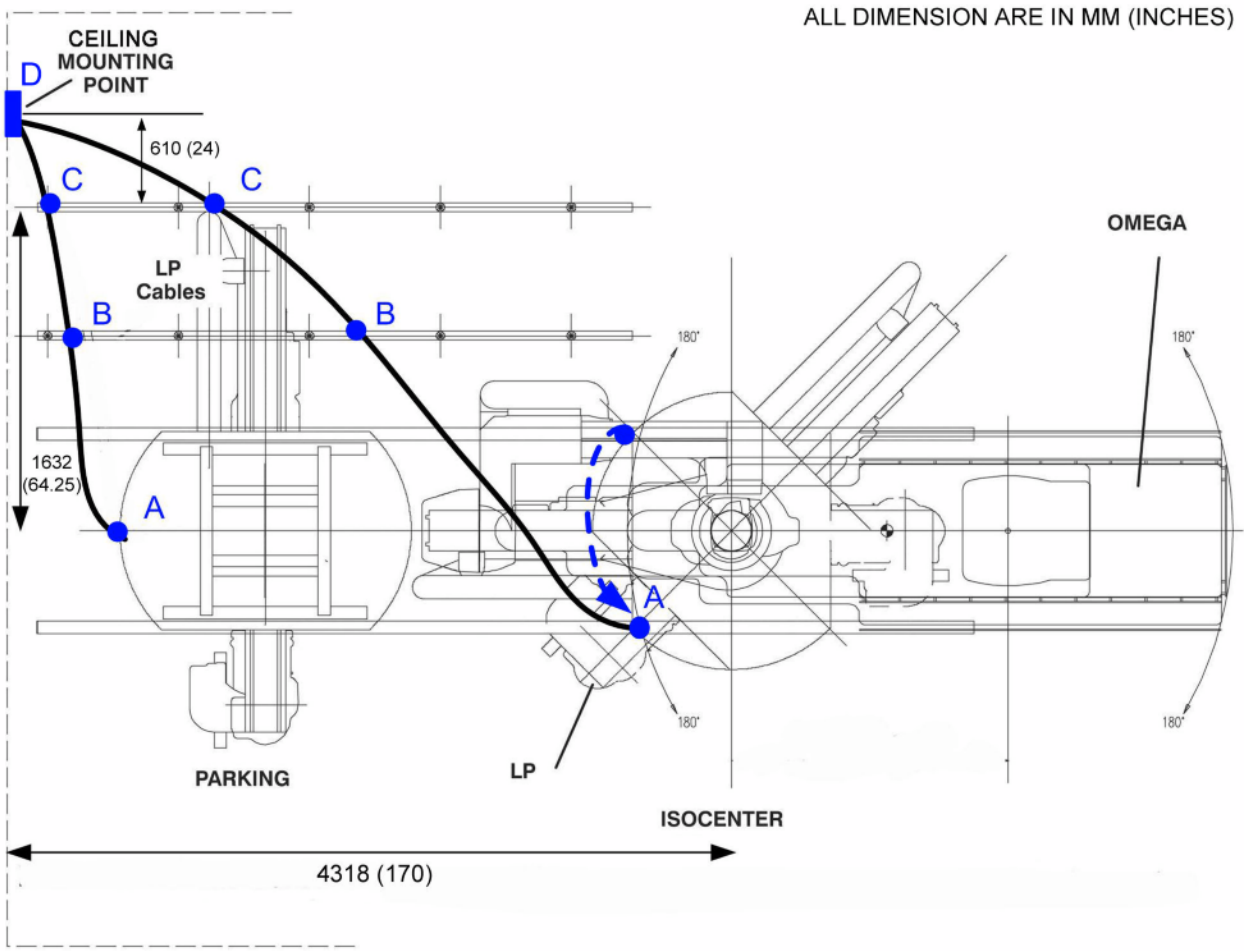

Maximum cable drape length is 6 m / 236 in (with vinyl zipper cable cover of 6.2 m / 244 in) from LP4 to ceiling exit point. This includes sag between drape points (A, B, C and D).

The worst case LP4 cable drape extension, including sag, is:

- 1.85 m (72.8 in) between A and B
- 2.05 m (80.7 in) between B and C
- 2.30 m (90.5 in) between C and D

Illustration 5-14: C2 LC/LP Cabinet Dimensions

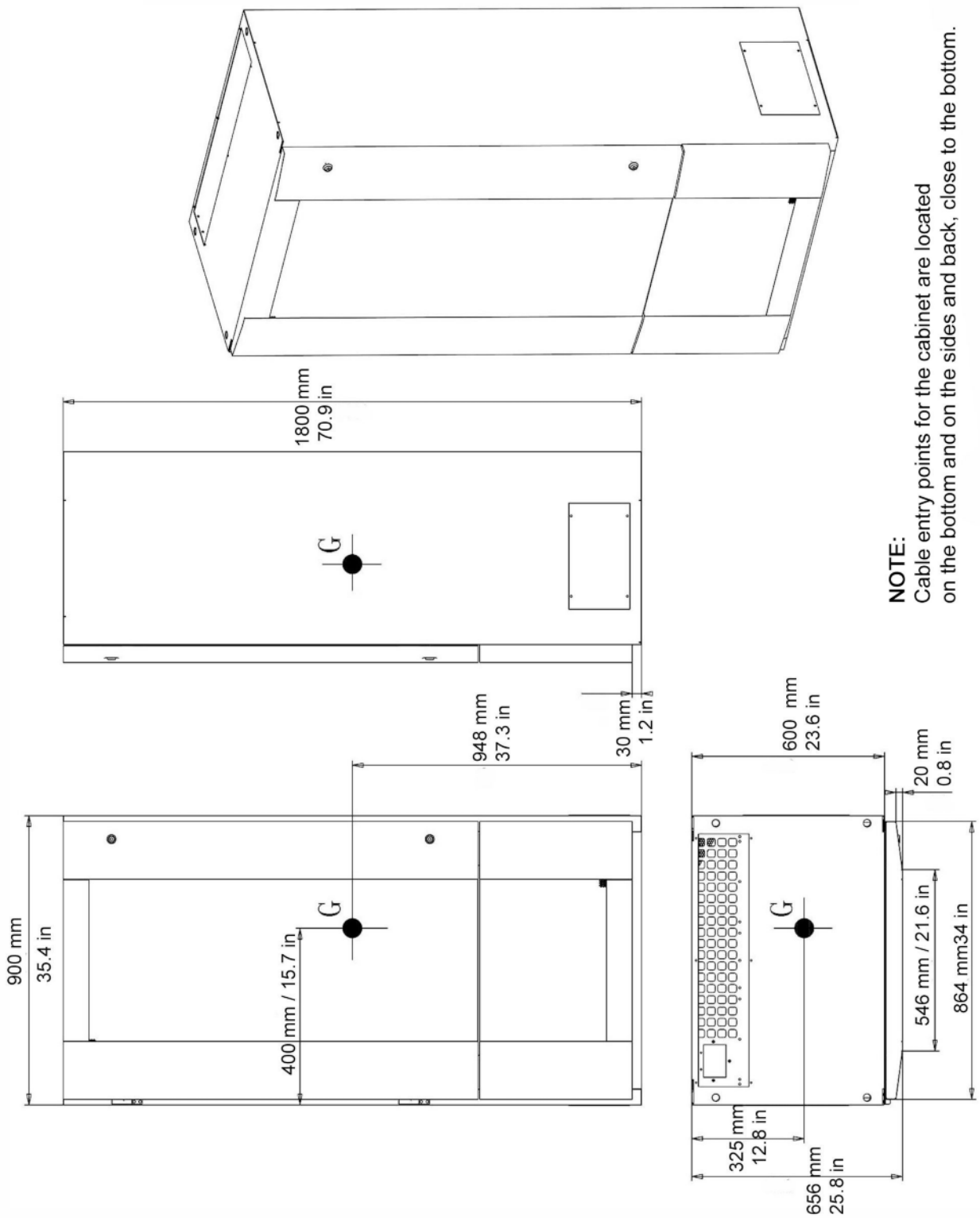

Illustration 5-15: C1 Frontal Cabinet Dimensions

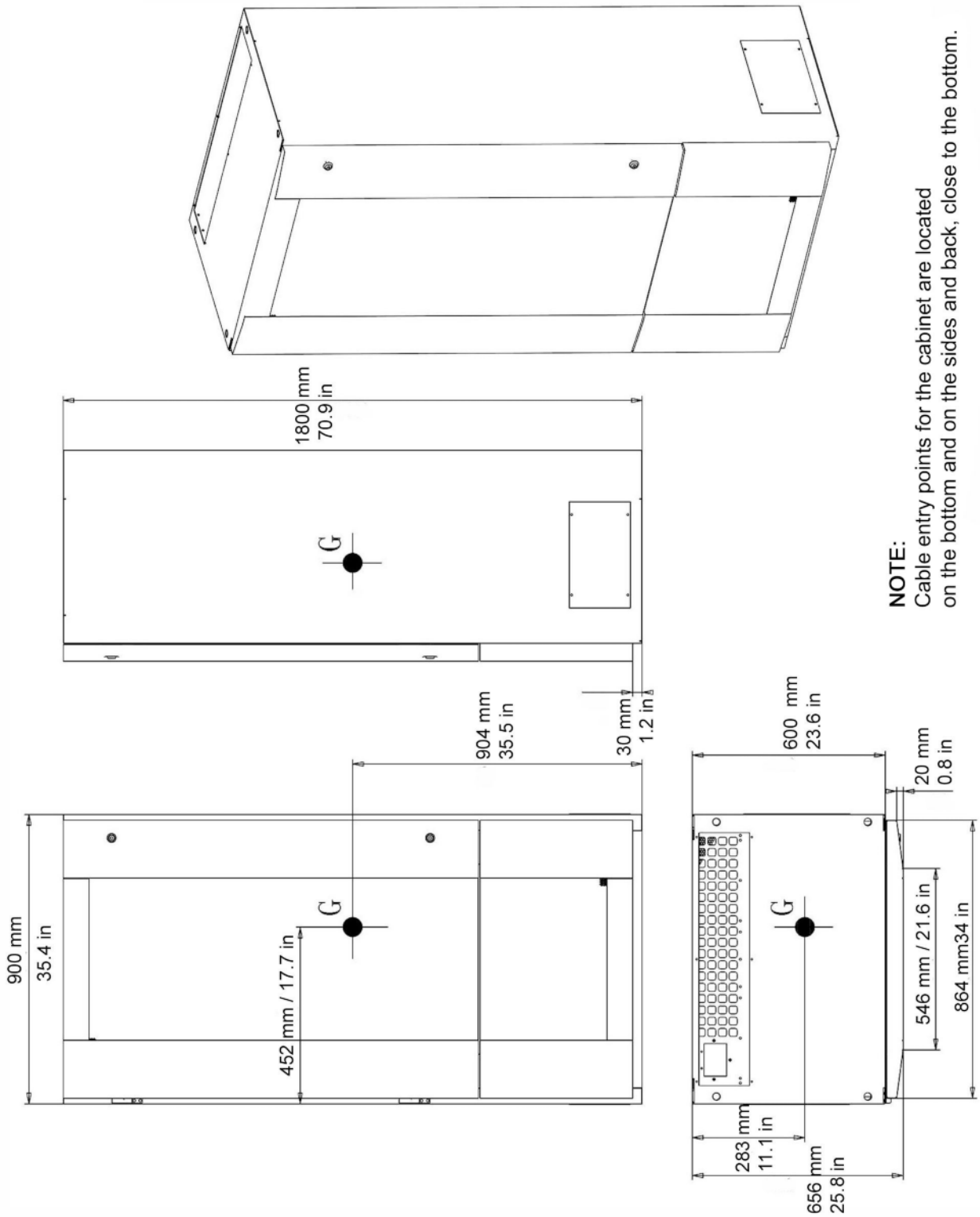

Illustration 5-16: C1 Lateral Cabinet Dimensions

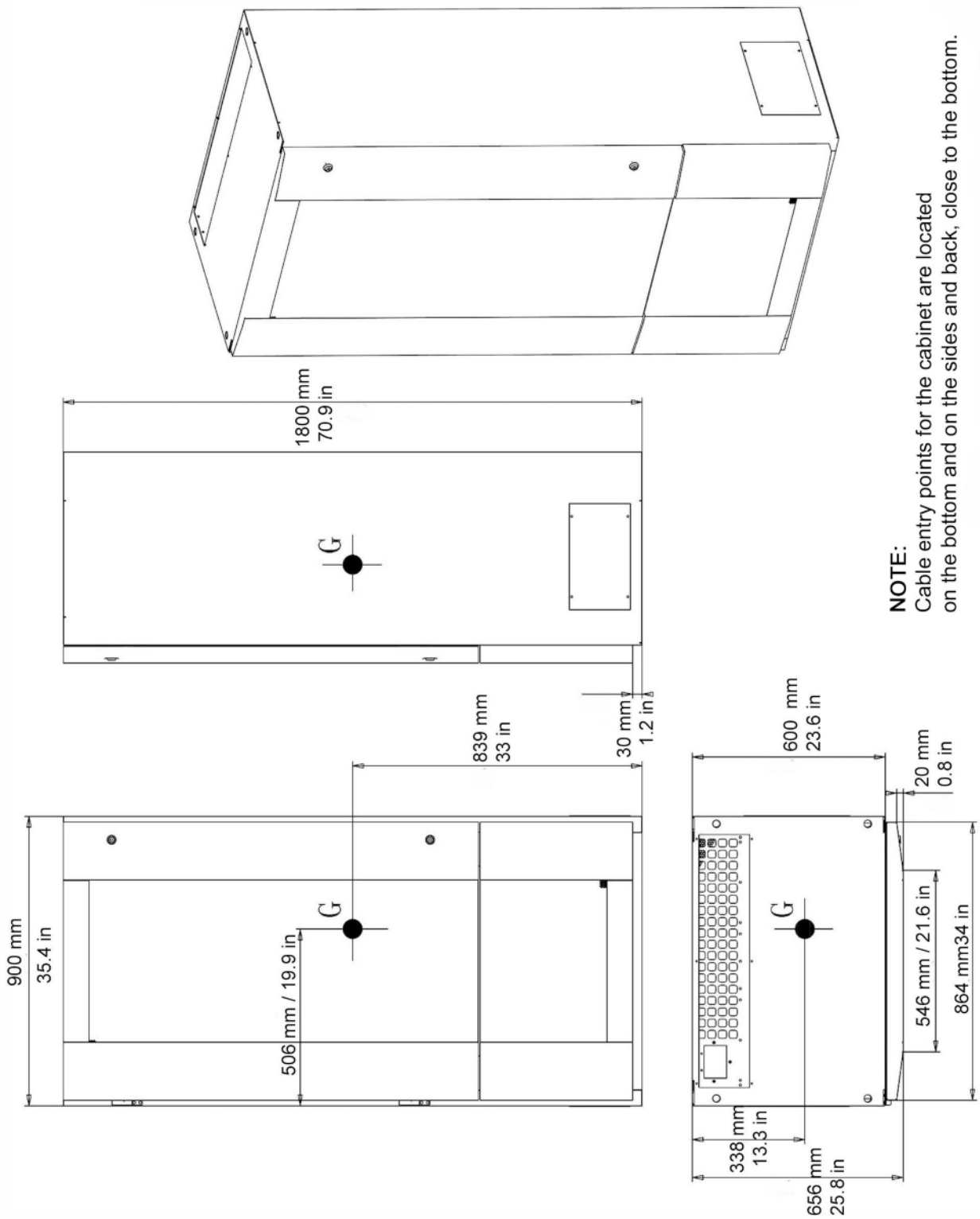

Illustration 5-17: Coolix 4000 Chiller Dimensions and Floor Space Diagram

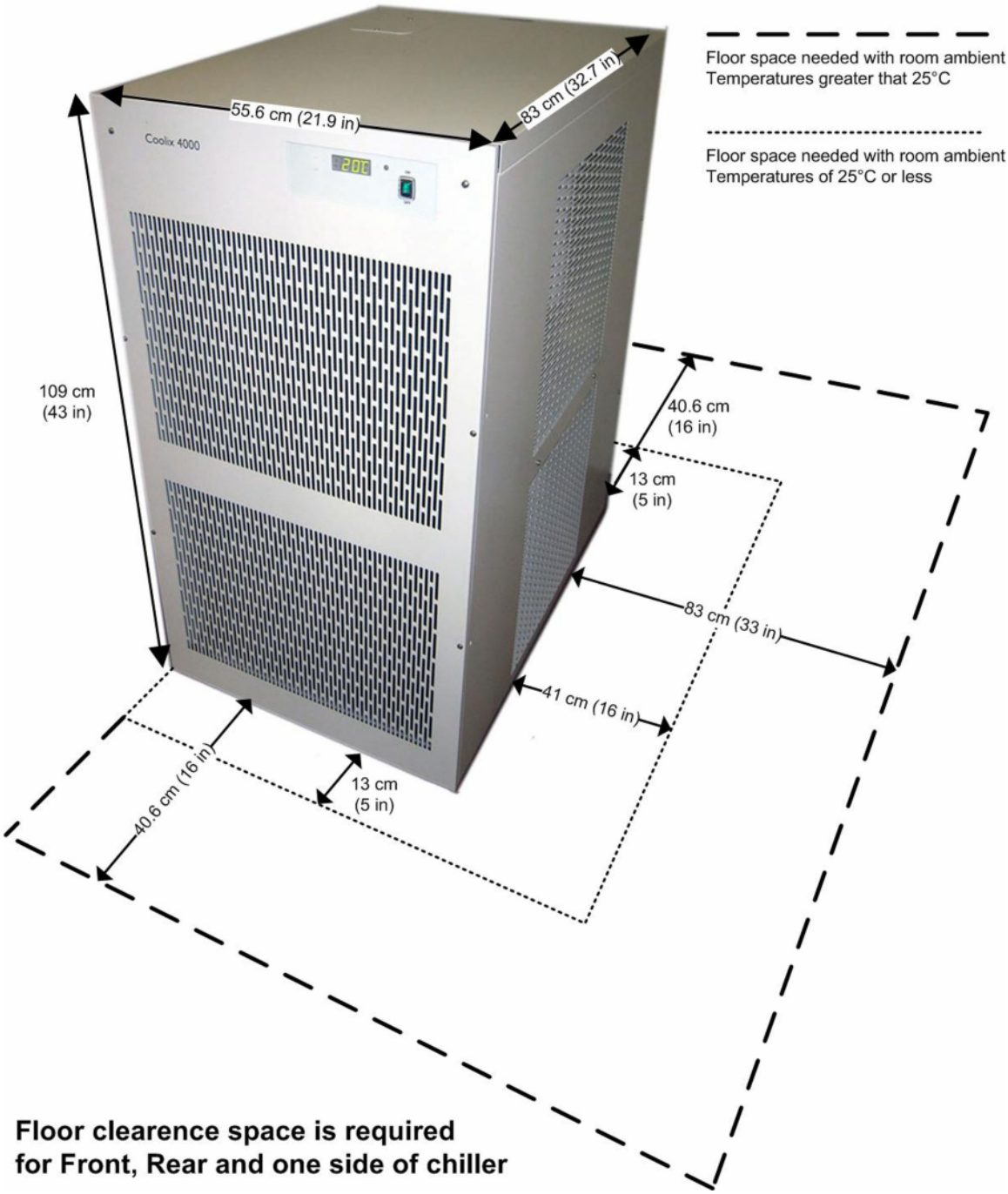

Exact dimensions of the Coolix 4000 chiller depend on model type.

Required floor space depends on ambient room temperatures. When in doubt, allow for maximum floor space.

Illustration 5-18: Thermo-Con Detector Conditioner (and Mounting brackets) Dimensions

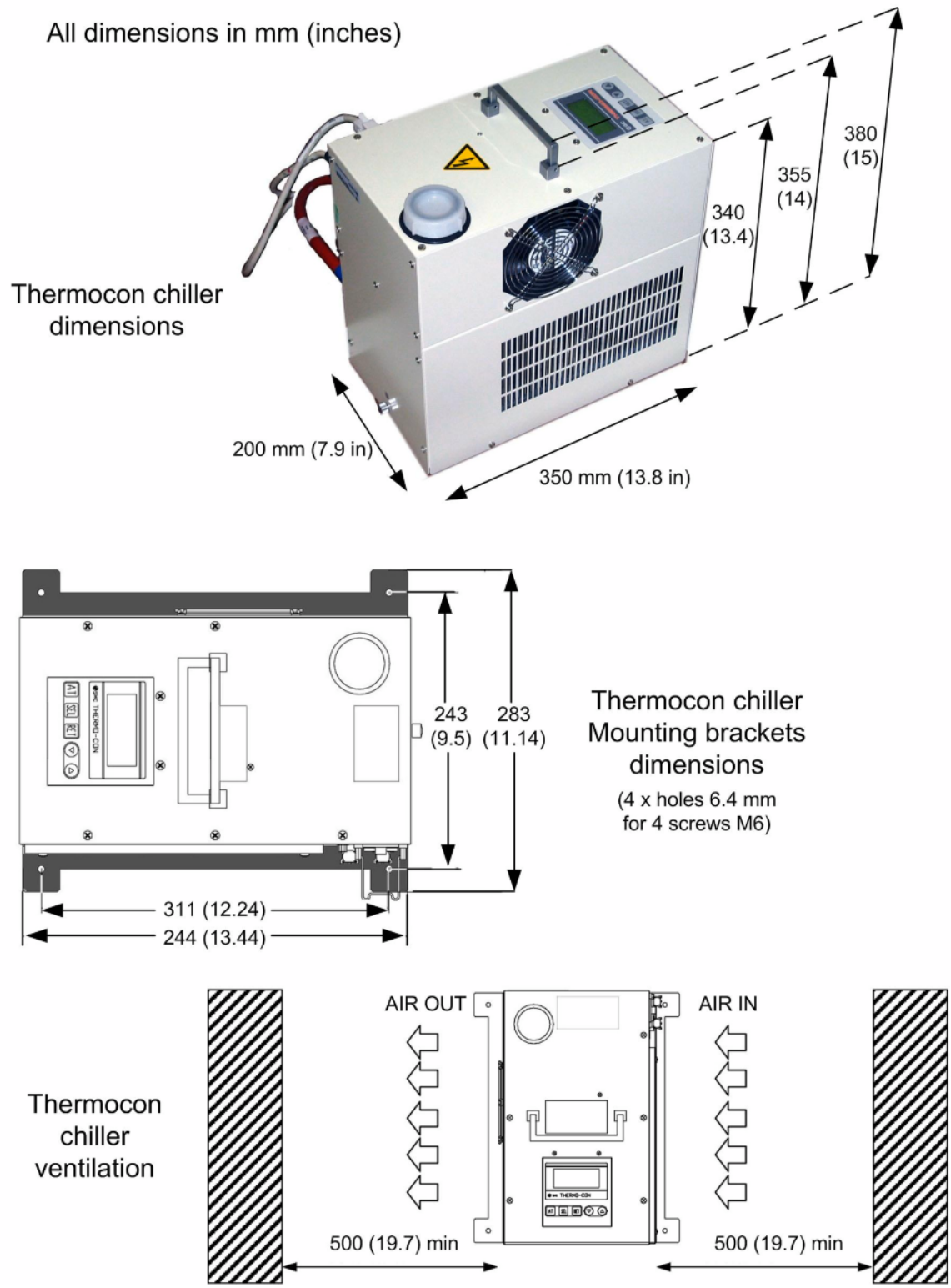

Illustration 5-19: 3 kVA Cabinets UPS - model 9125

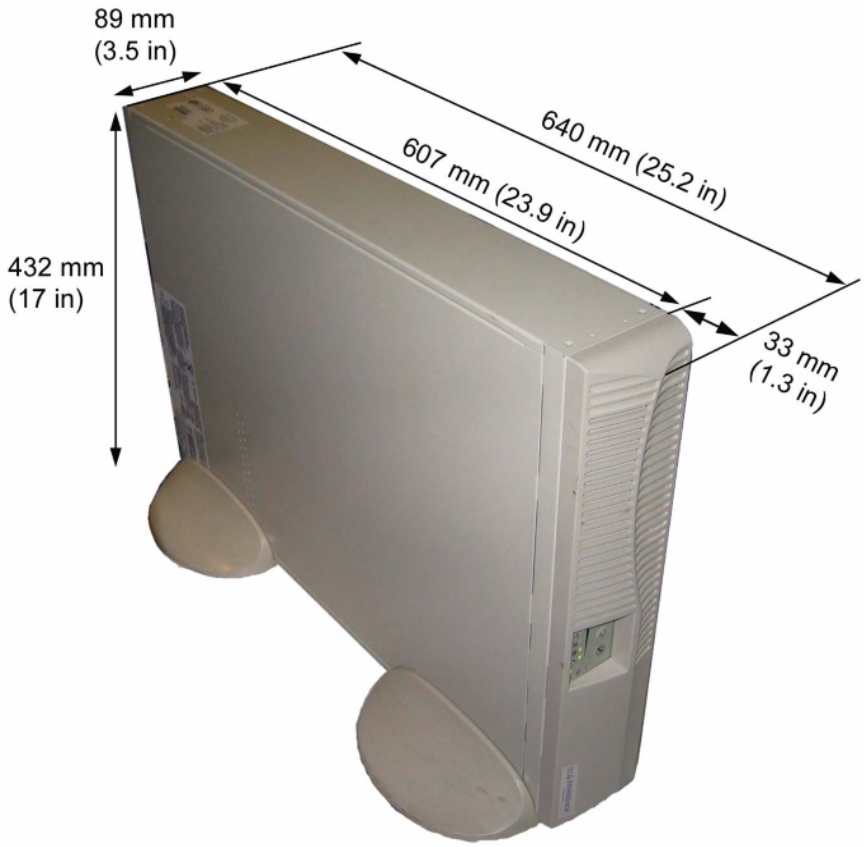

3 kVA UPS Mounting bracket dimensions (underside view)

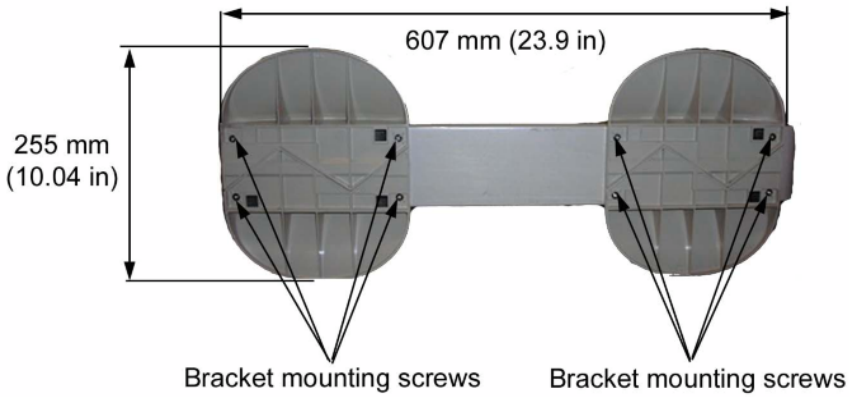

Illustration 5-20: 3 kVA Cabinets UPS - model 9130

Illustration 5-21: Fluoro UPS Cabinets (Optional) - UPS UL

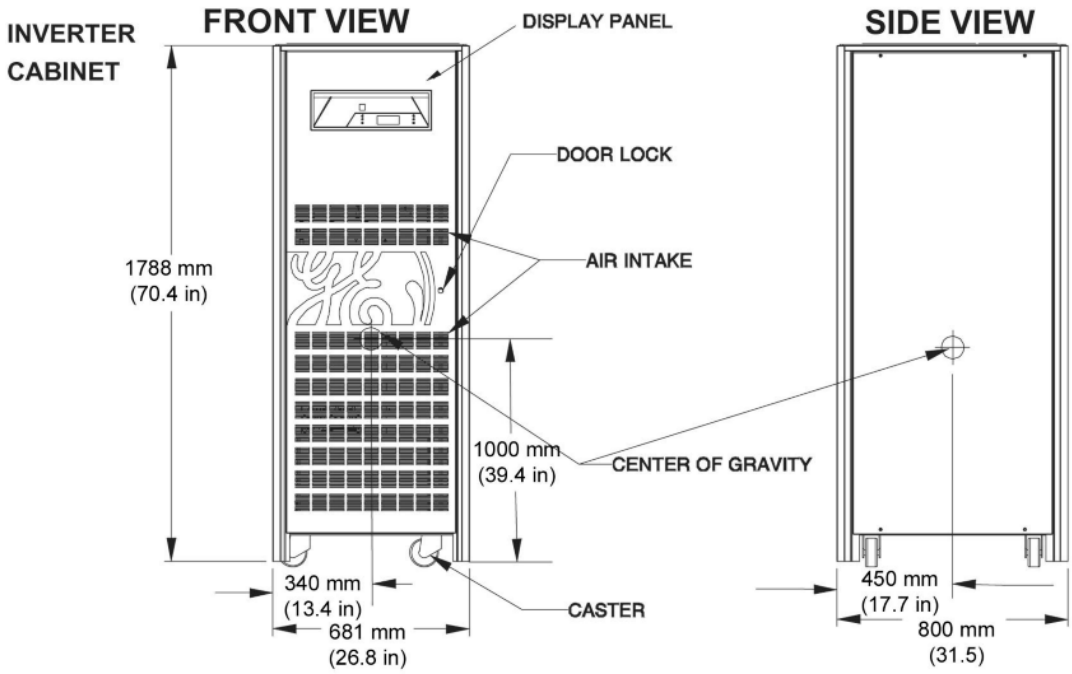

The left, right or back side of the UPS cabinet can be positioned against the wall.

The front side of the UPS cabinet must be accessible for maintenance operation.

In front of the cabinet, the clear width of the service area to insure electrical safety shall be at least 0.9 m. In cases where 2 cabinets are installed face to face (both sides of the access way), the clear width shall be at least 1.2 m.

Recommended minimum clearance between ceiling and top of the UPS should be 400 mm (16”) for proper cooling air exhaust.

Illustration 5-22: Fluoro UPS Cabinets (Optional) - UPS CE

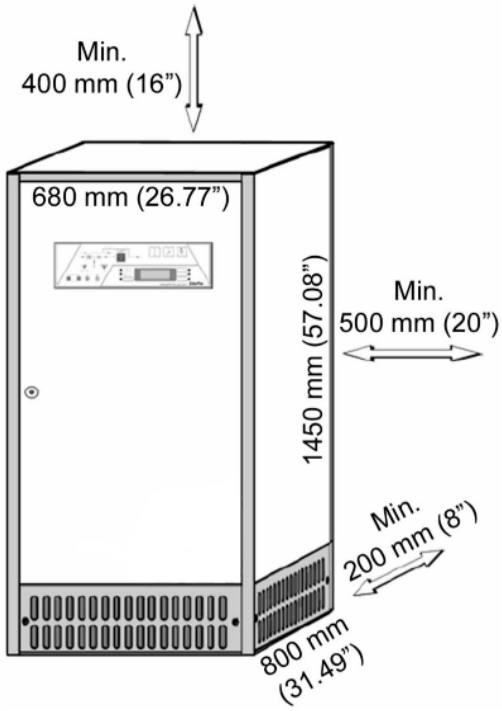

The UPS cabinet can be positioned against the wall but, in order to improve the ventilation and to make easier the maintenance operations for UPS and battery, we recommend a minimum distance of 200 mm (8”) from the wall.

The right side of the UPS cabinet must be accessible for maintenance operation.

In front of the cabinet, the clear width of the service area to insure electrical safety shall be at least 0.9 m. In cases where 2 cabinets are installed face to face (both sides of the access way), the clear width shall be at least 1.2 m.

Recommended minimum clearance between ceiling and top of the UPS should be 400 mm (16”) for proper cooling air exhaust.

Illustration 5-23: DL Keypad Dimensions

ALL DIMENSIONS ARE IN MM (INCHES)

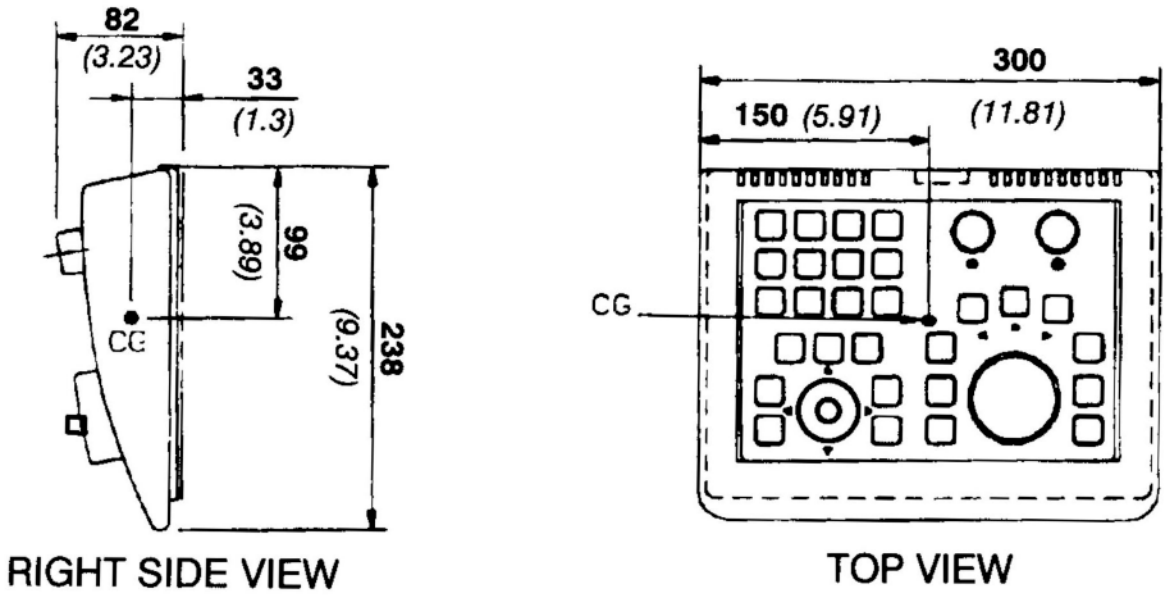

Illustration 5-24: DL Image Monitor Dimensions

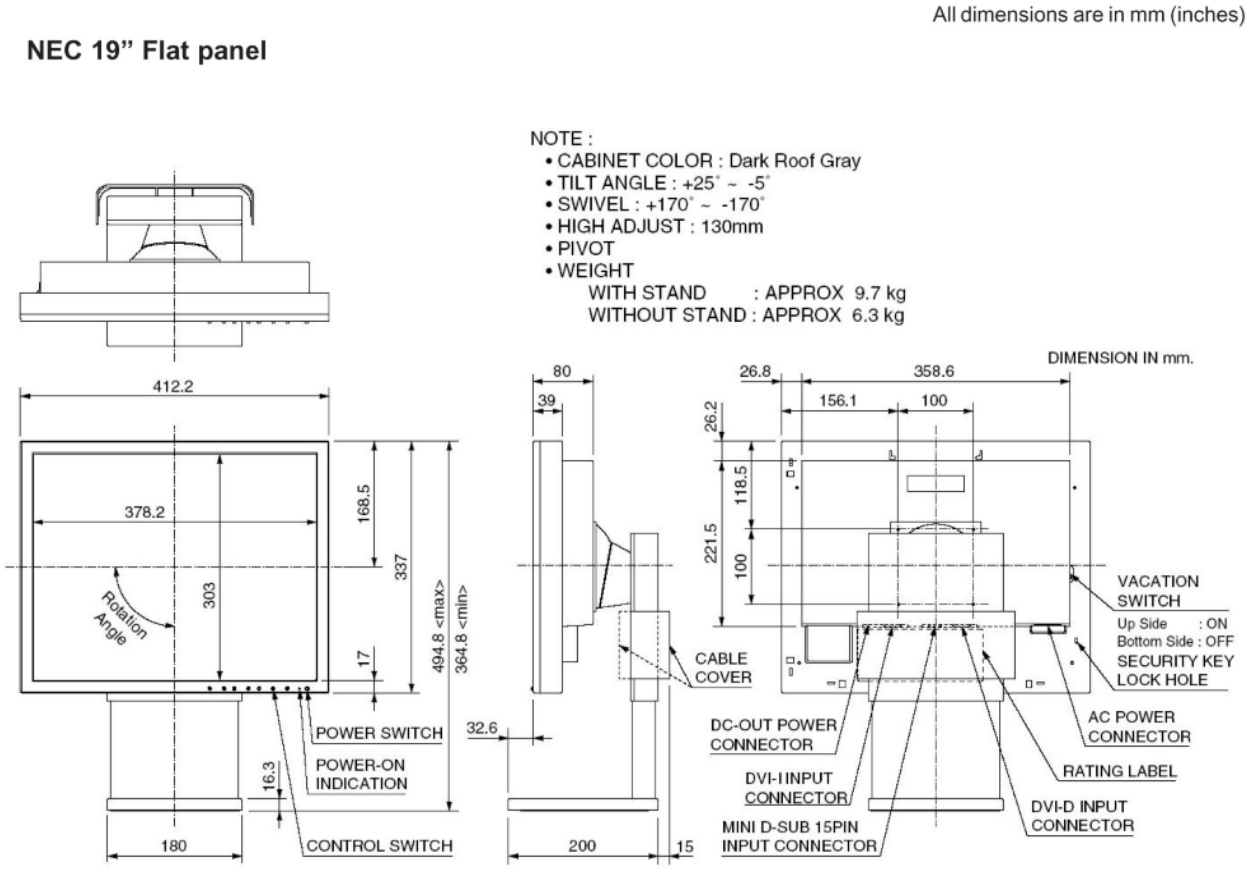

Illustration 5-25: VCIM

2 Mounting Requirements

2.1 Floor Loading and Recommended Mounting Methods

See Table 5-3. To obtain floor loading and recommended mounting methods for components not specified in Table 5-3, refer to the appropriate component Pre-Installation Manual listed in Chapter 2, System Compatibility.

Table 5-3:

PRODUCT OR COMPONENT	NET WEIGHT KG (LBS)	DIMENSIONS MM (INCHES)			LOAD BEARING AREA MM (INCHES)	WEIGHT/ OCCUPIED AREA	MOUNTING METHOD
		WIDTH	DEPTH	HEIGHT			
Innova LC Positioner	670 (1477) for 2121-IQ and 705 (1556) for 3131-IQ	See Illustrations *Innova LC Position Dimensions*: • Side view • Top view • Front view in Dimension Drawings			Circle diameter 600 (23.62)		Recommended: • Through-Bolts (12) Alternates: • On Grade 5/8 in, Anchors (12) • Above Grade 3/4 in. Anchors (12) See Illustration 5-26,Illustration 5-27 and Illustration 5-28
Innova LP4 Positioner	735 (1620) for 2121-IQ and 797 (1757) for 3131-IQ	See Illustrations *Innova LP4 Positioner Dimensions*: • Side view • Top view • Front view in Dimension Drawings			NA		NA
Table	754.6 (1664) See note 1	See Illustration *Omega Table Dimensions* in Dimension Drawings			571.5x429 (22.5x16.9)	2410 kg/m^2 (492.3 lb/ft2)	Same as Innova LC Positioner
C2 LC/LP Cabinet	283 (624)	See Illustration *C2 LC/LP Cabinet Dimensions* in Dimension Drawings			600x900 (23.63x35.44)	478 kg/m^2 (98 lb/ft^2)	
C1 Frontal Cabinet	404.5 (891)	See Illustration *C1 Frontal Cabinet Dimension* in Dimension Drawings			600x900 (23.63x35.44)	838 kg/m^2 (172 lb/ft^2)	
C1 Lateral Cabinet	320 (706.6)	See Illustration *C1 Lateral Cabinet Dimension* in Dimension Drawings			600x900 (23.63x35.44)	838 kg/m^2 (172 lb/ft^2)	
COOLIX 4000	143 (317) See note 3	556 (21.9) See note 2/3	830 (32.7) See note 3	1900 (43) See note 3	Four casters	Not applicable	
Detector Conditioner Thermo-Con	14.6 (32.2)	See Illustration *Detector Chiller Thermo–Con Dimensions* in Dimension Drawings			13.5x11.14 (344x283)		See note 4
Fluoro UPS UL Inverter cabinet	541 (1065)	680.2 (26.78)	800 (31.5)	1800.9 (70.90)			
Fluoro UPS CE	483 (1064)	680 (26.8)	800 (31.5)	1450 (57.1)			
UPS 3 kVA - model 9125	37 (81.6)	89 (3.5)	640 (25.2)	432 (17)			

PRODUCT OR COMPONENT	NET WEIGHT KG (LBS)	DIMENSIONS MM (INCHES)			LOAD BEARING AREA MM (INCHES)	WEIGHT/ OCCUPIED AREA	MOUNTING METHOD
		WIDTH	DEPTH	HEIGHT			
UPS 3 kVA - model 9130	36 (79)	214 (8.43)	412 (16.2)	346 (13.6) with feet			
Power Distribution Box CE	225 (496)	800 (31.5)	300 (11.8)	1800 (70.8)			
Power Distribution Box UL	389.5 (859)	1016 (40)	356 (14)	2120 (83)			
DL keypad	1.4 (3)	283 (11.55)	300 (11.8)	82 (3.25)			
DL LCD monitor	8.2 (18)	179 (7)	387 (15.2)	504 (19.8)			
VCIM	0.95 (2.09)	450 (17.7)	150 (5.9)	50 (2)			
Videostation VCR See note 3	12 (26.5)	370 (14.57)	270 (10.63)	144 (5.67)			
6 monitors suspension	126 (277)						
8 monitors suspension	170 (375)						
Components common to IVUS Rev 1 & Rev 2 Option							
IVUS PIM (Ultrasound probe)	2 (4.4)	38	96	177			
IVUS Control Station	4 (8.8)	120	360	240			
IVUS Joystick	1 (2.2)	90	76	102			
IVUS Isolation transformer	7 (15.4)	97	267	171			
IVUS CPU	15 (33.1)	396	162	510			
IVUS Keyb. & mouse pad	1 (2.2)	NA	NA	NA			
IVUS monitor	15 (33.1)	420	432	240			
IVUS Image printer	6 (13.2)	158	184	18			
IVUS 4-way Video Switch	1 (2.2)	44	222	241			
Components specific to IVUS Rev 2 Option							
PIMr	1,5 (3,2)	356	102	102			
Pimette	1 (2,2)	142	76	18			
Touchpad controller	1 (2,2)	211	180	76			
Printer HP	1,3 (2,8)	227	138	117			

NOTE: (1) including 353 lbs (160 kg) patient.

NOTE: (2) Depth.

NOTE: (3) Maximum dimensions given. Exact dimensions depend on chiller manufacturer type.

NOTE: (4) For regions without seismic constraints, the Detector Conditioner Thermo-Con can be floor or wall mounted. For regions with seismic constraints, the Detector Conditioner Thermo-Con must be floor mounted.

2.2 Positioner and Table Floor Mounting

The distances between the Innova LC Positioner and the Tables are critical for a proper clinical usage. For this reason, GE Healthcare provides two floor mounting templates to ensure these components are properly placed in relation to one another.

Table 5-4:

Title	Illustration
Innova LC Positioner Floor Mounting Methods	Illustration 5-26 and Illustration 5-27
Cable Conduit For On-Grade Floor Anchor Kit	Illustration 5-28
Inner Base Plate For Above Grade Floor Anchor Kit	Illustration 5-29
Fixing Bolt Overview	Illustration 5-30
Gantry and table mounting holes	Illustration 5-31

Illustration 5-26: Innova LC Positioner Floor Mounting Methods (1/2)

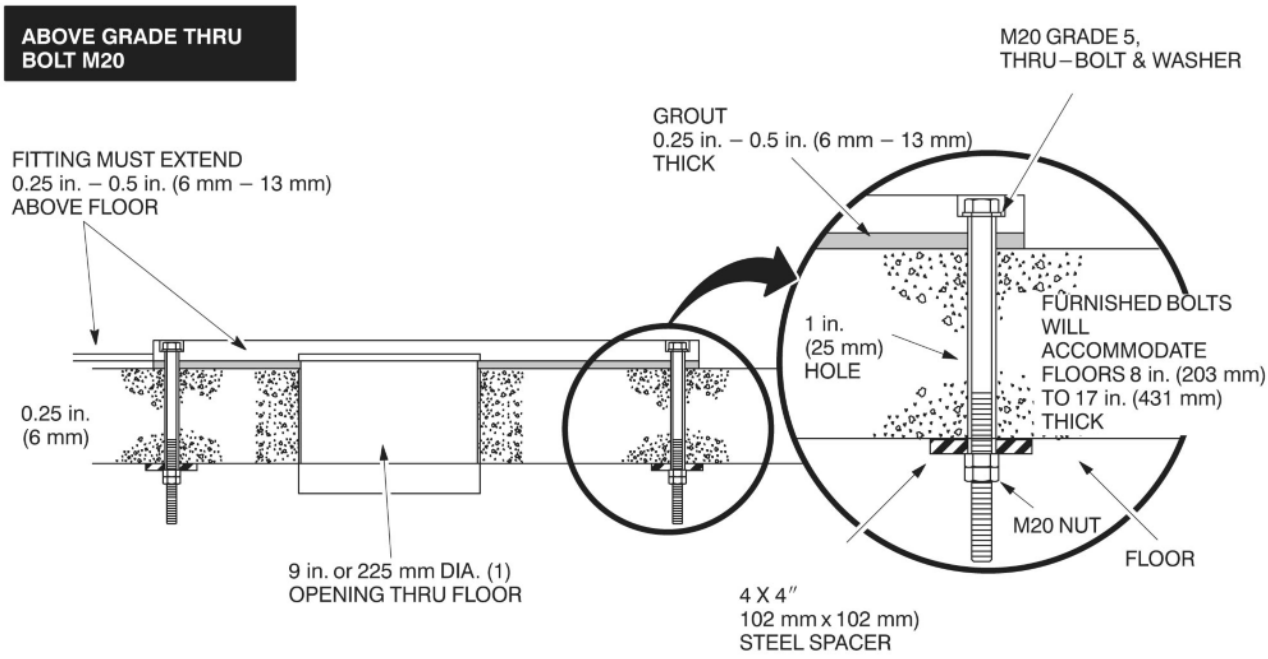

(1) The US or the METRIC standard for base plate inner

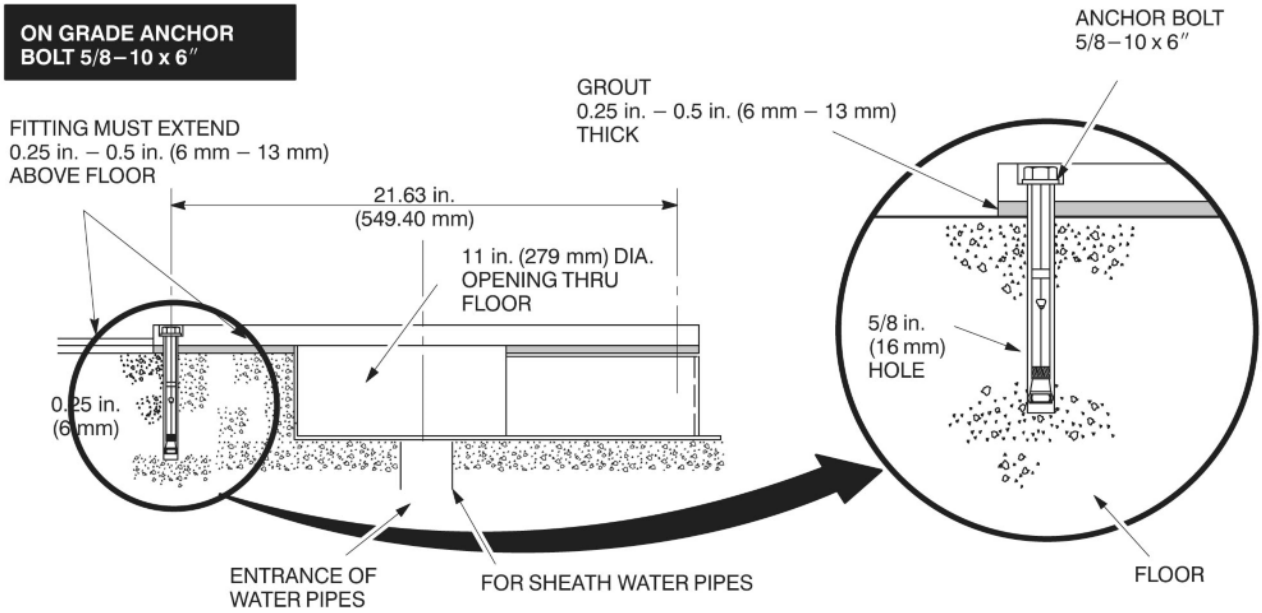

Illustration 5-27: Innova LC Positioner Floor Mounting Methods (2/2)

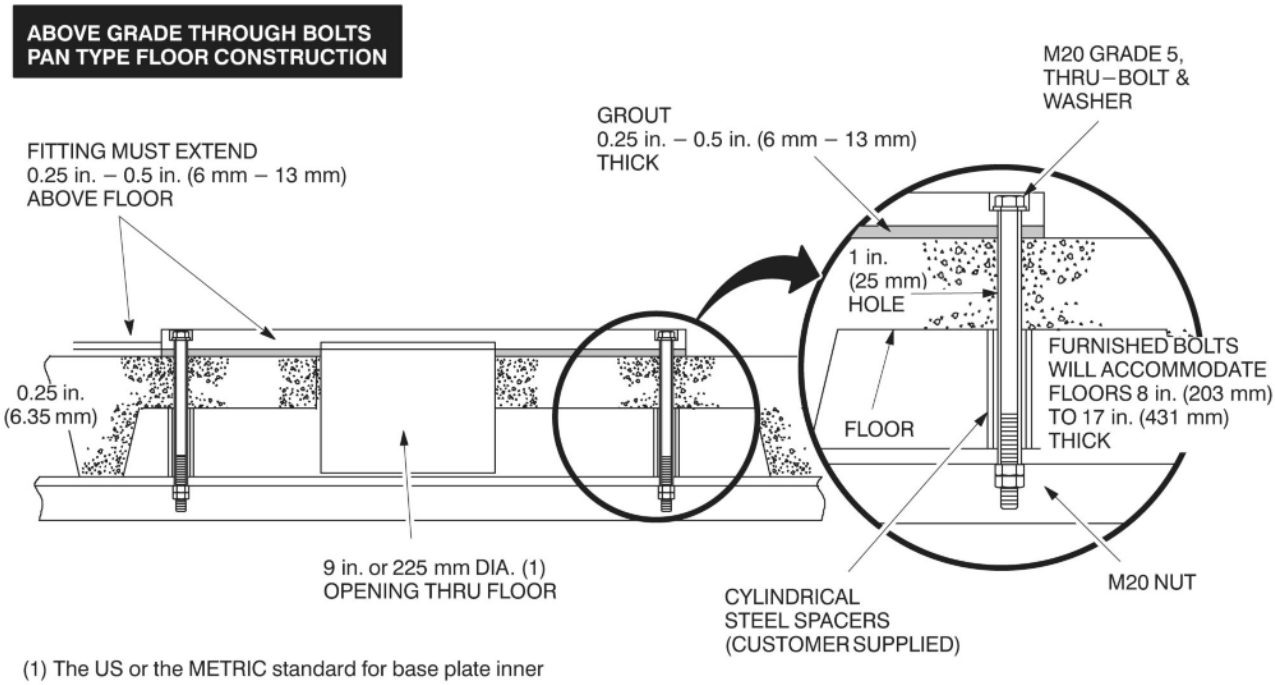

(1) The US or the METRIC standard for base plate inner

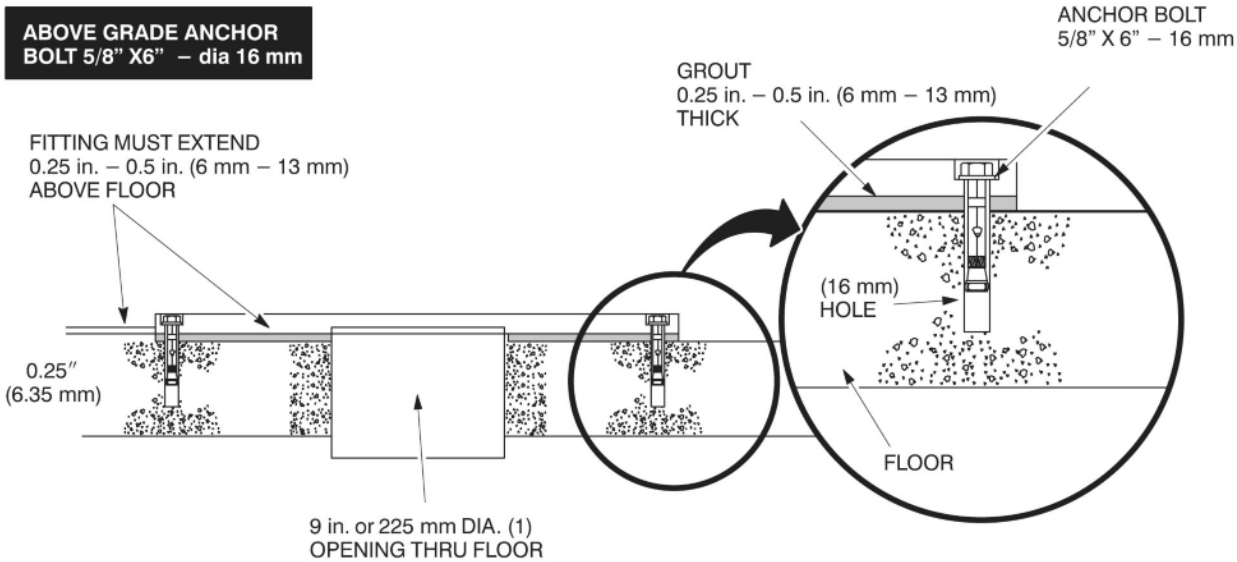

(1) The US or the METRIC standard for base plate inner

Illustration 5-28: Cable Conduit For On-Grade Floor Anchor Kit

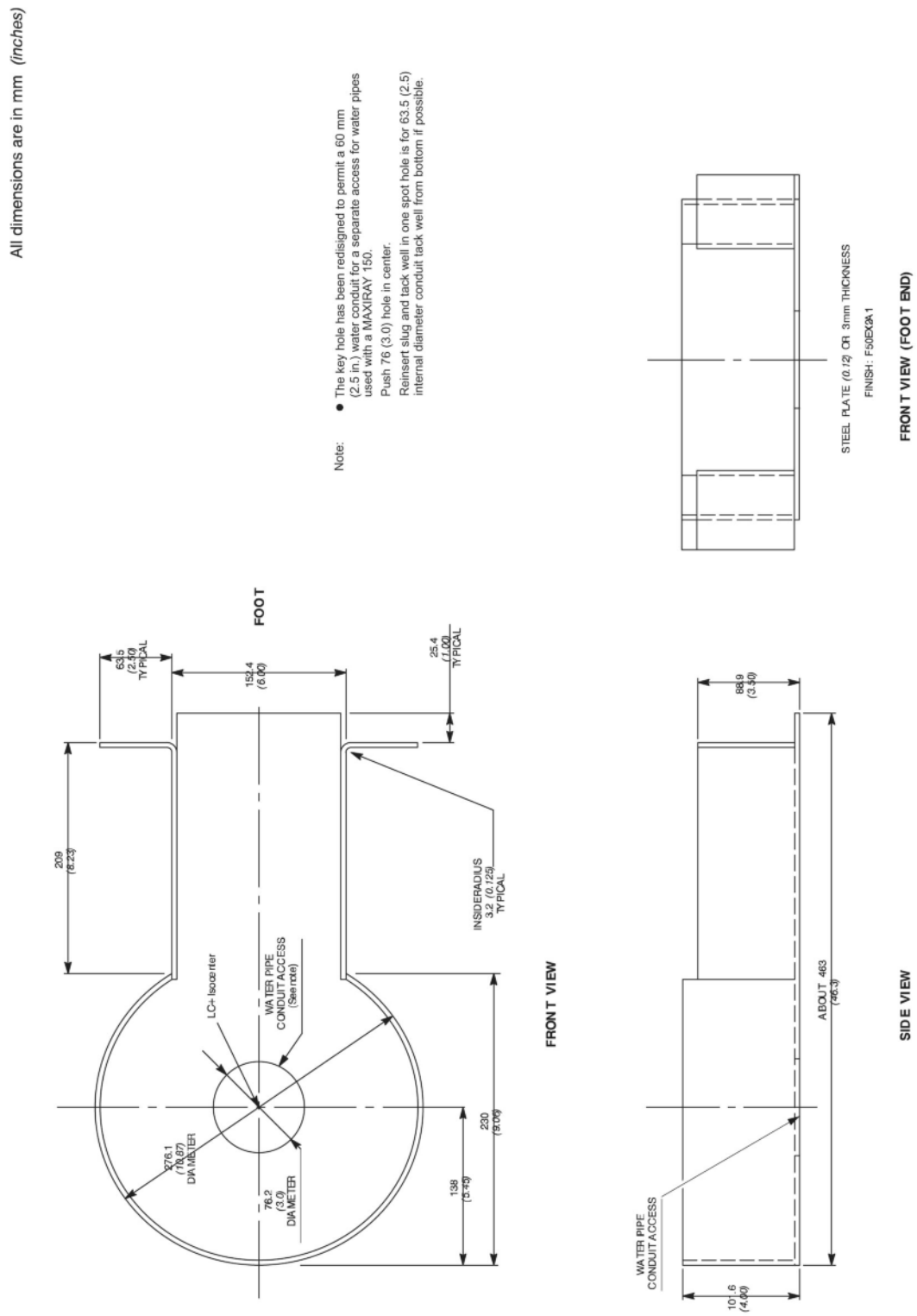

Illustration 5-29: Inner Base Plate For Above Grade Floor Anchor Kit

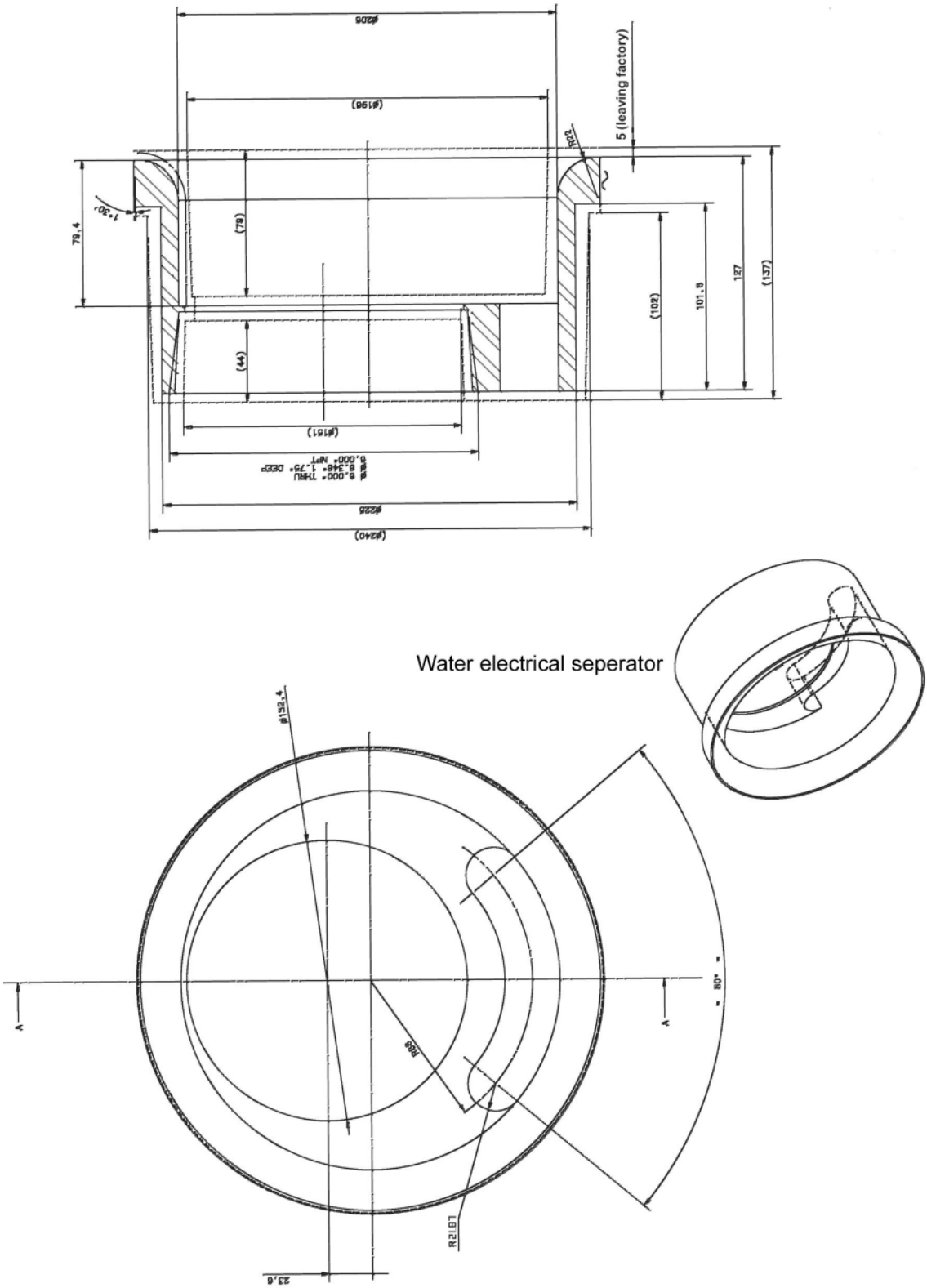

Illustration 5-30: Fixing Bolt Overview

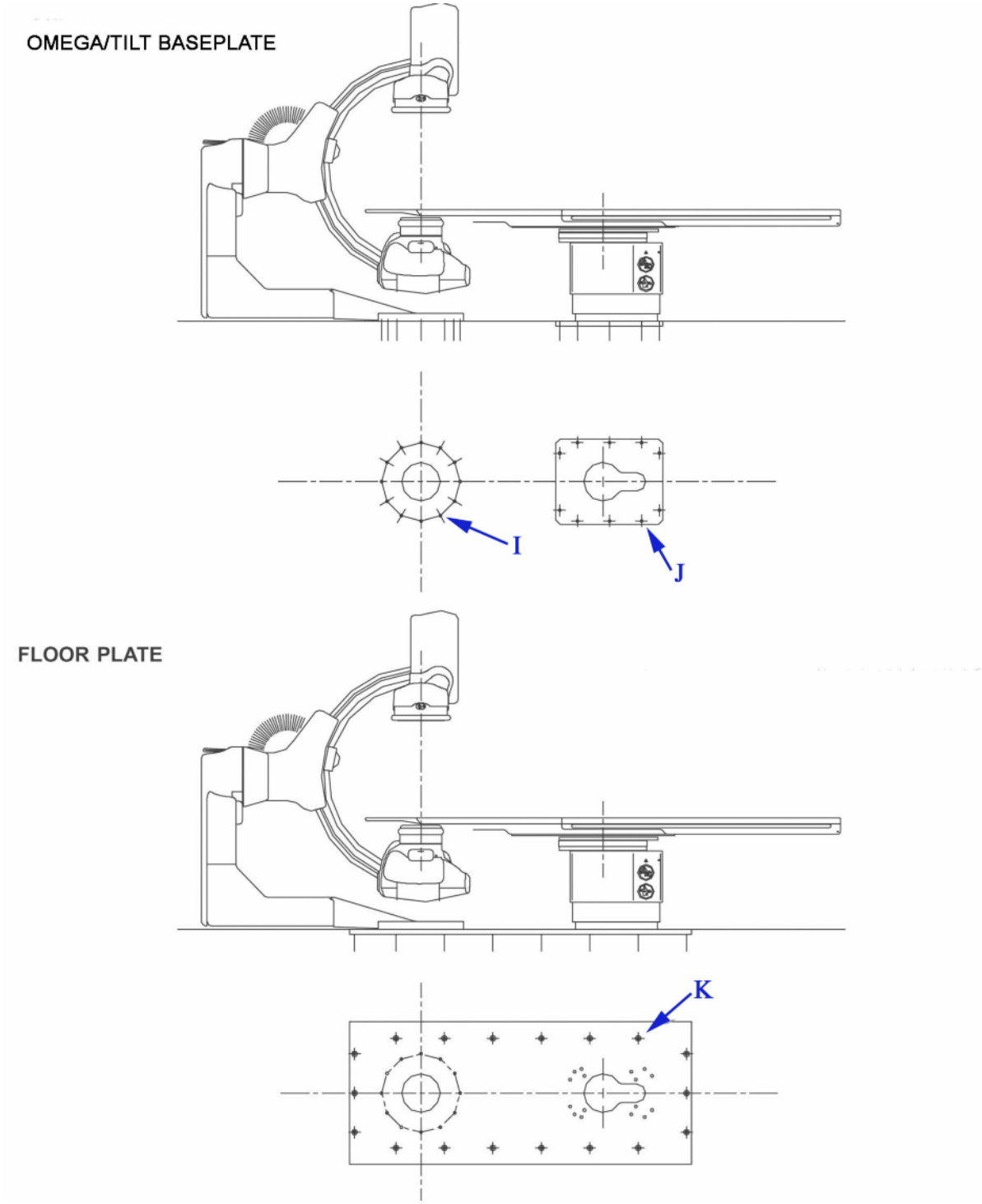

NOTE: For more details on Omega/Tilt Baseplate, refer to Illustration 5-31.

NOTE: With any kind of fixation methods (Bolts M20, Mechanical anchors or Chemical anchors), the number of holes used mandatory is:

- Gantry baseplate : 12 max and 8 min holes used are acceptable
- Table baseplate : 10 max and 8 min holes used are acceptable
- Floor baseplate : 24 max and 12 min holes used are acceptable

we can have only 2 consecutive holes omitted.

Pull out efforts and recommendations about chemical anchors not provided by GE.

The following table provides the recommended chemical anchors for Omega/LC baseplates and for the floor plate ordered locally that they could be used instead of bolts provided by GE.

Table 5-5: Chemical anchors Pull out efforts and recommendations

	Gantry baseplate	Table baseplate Omega	Table Omega	Floor plate (to be ordered locally)
Mark	I on Illustration 5-30	J on Illustration 5-30	A on Illustration 5-31	K on Illustration 5-30
Pull out effort	736 daN per bolt if 12 used and 1992 daN per bolt if 8 used	1120 daN per bolt if 10 used and 2000 daN per bolt if 8 used	4432 daN per bolt with 4 bolts	272 daN per bolt if 24 used and 2008 daN per bolt if 12 used
Number of holes in the plate	12 max (8 min mandatory)	10 max (8 min mandatory)	4 mandatory	24 max (12 min mandatory)
Recommended chemical anchors example 1	Supplier HILTIHVU adhesive capsule + HAS Anchor rod	Supplier HILTIHVU adhesive capsule + HAS Anchor rod	Supplier HILTIHVU adhesive capsule + HAS Anchor rod	Supplier HILTIHVU adhesive capsule + HAS Anchor rod
Threaded rod	M16 A4-70 / 333 131 5/8	M20 A4-70 / 333 135 3/4	M20 A4-70 / 333 135 3/4	M16 A4-70 / 333 131 5/8
Hole diameter in the floor	18 mm (11/16 in)	24 mm (7/8 in)	24 mm (7/8 in)	18 mm (11/16) in
Hole depth in the floor	125 mm (5 in)	170 mm (6-5/8 in)	170 mm (6-5/8 in)	125 mm (5 in)
Minimum floor thickness	180 mm (7 in)	220 mm (8-1/2 in)	220 mm (8-1/2 in)	180 mm (7 in)
Max Tightening Torque	80 N.m (59 ft-lb)	150 N.m (110 ft-lb)	150 N.m (110 ft-lb)	80 N.m (59 ft-lb)

NOTE: The floor plate ordered locally needs to be in steel.

Refer to supplier technical documents for all specification and installation data about chemical anchors.

Illustration 5-31: Gantry and table mounting holes

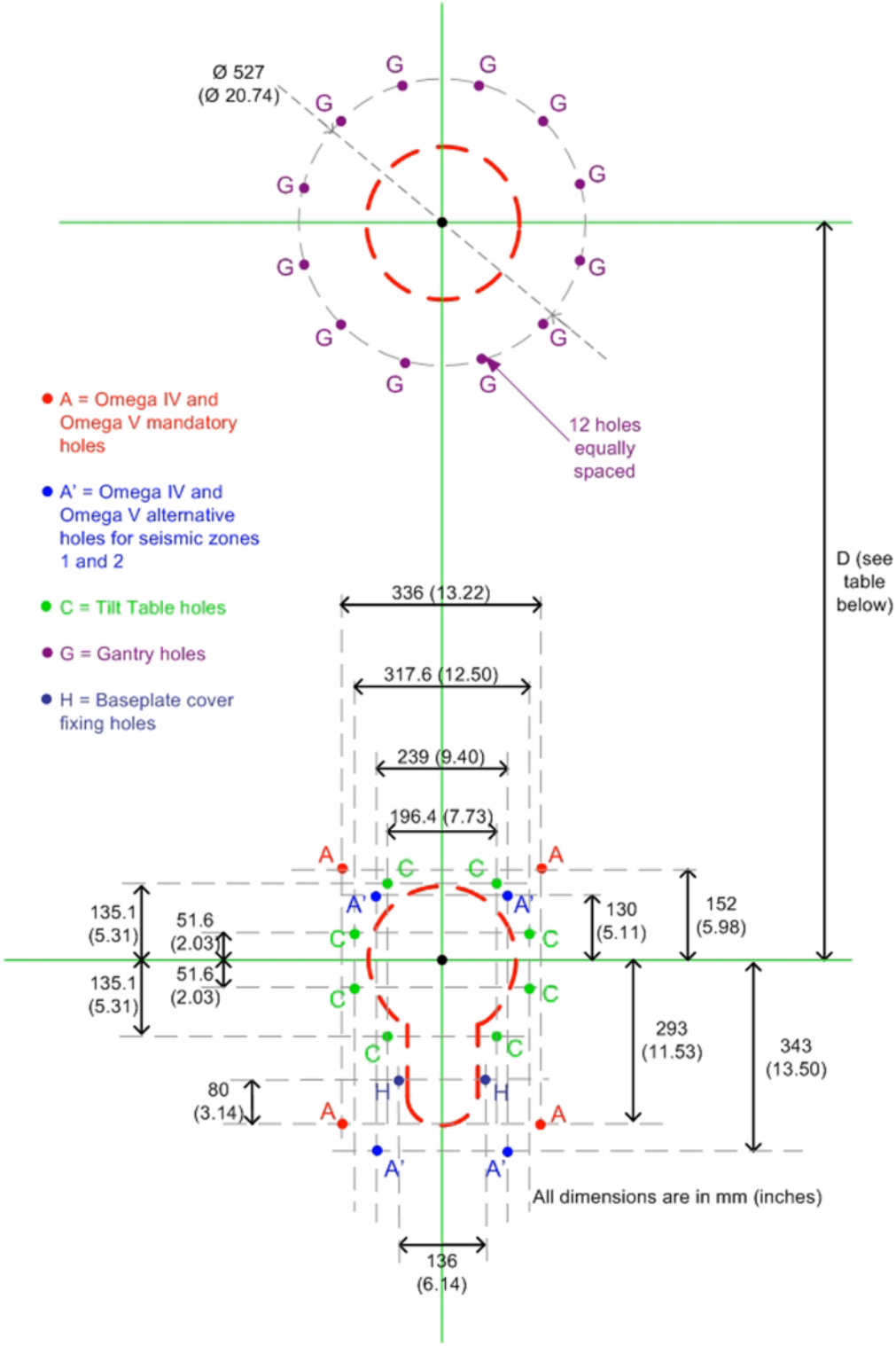

Table 5-6: D distance of Illustration 5-31

	ANGIO / CARDIO	CARDIO / NEURO
Omega IV Compact	NA	1395 mm (54.9 in)
Omega V Long	1278 mm (50.3 in)	1395 mm (54.9 in)
Omega V non motorized Long	1278 mm (50.3 in)	1395 mm (54.9 in)

2.3 Innova LC Positioner and Omega/Tilt Table Floor Preparation Kits (GE Healthcare supplied)

Illustration 5-32:

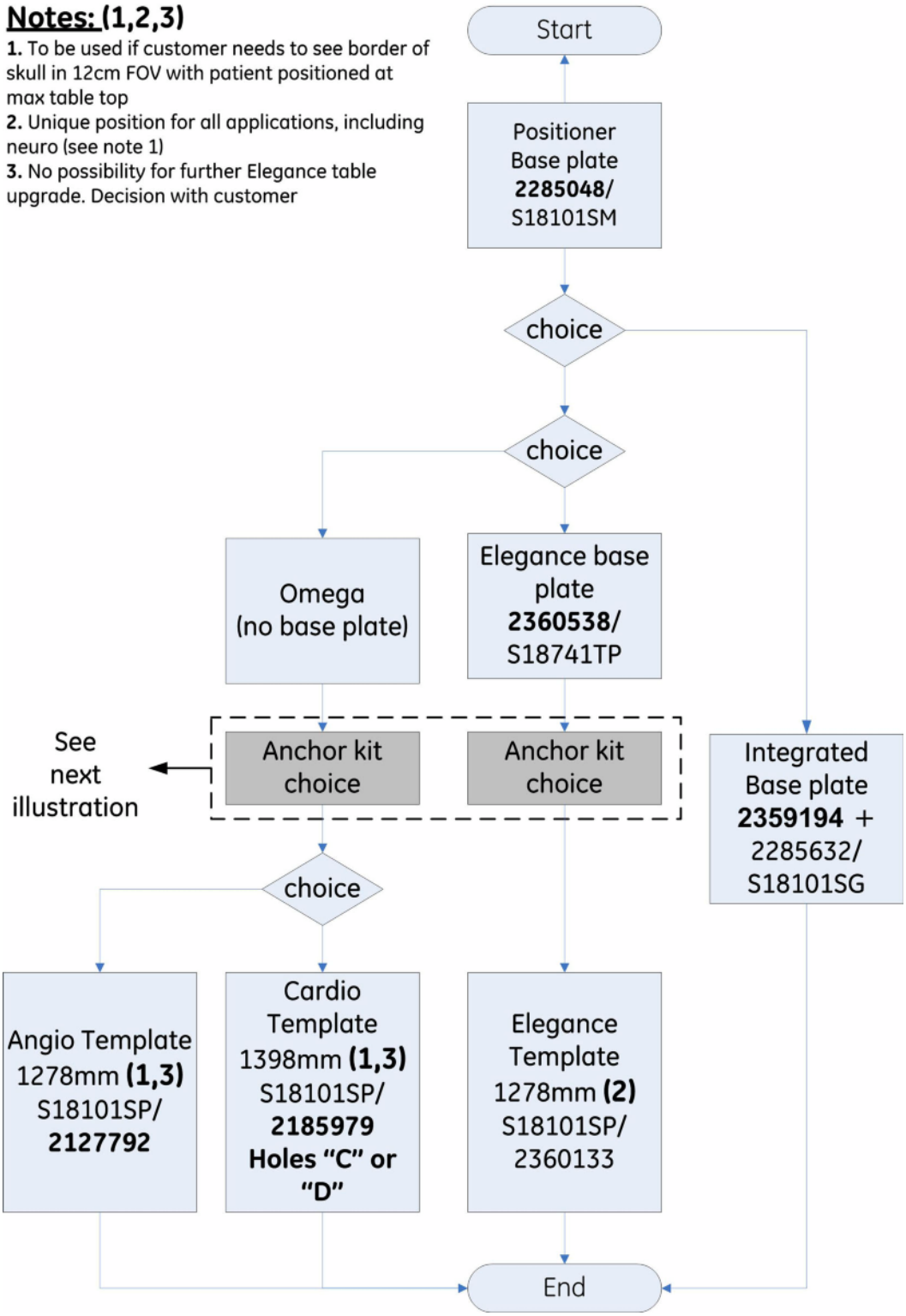

Illustration 5-33: Anchor kit choice

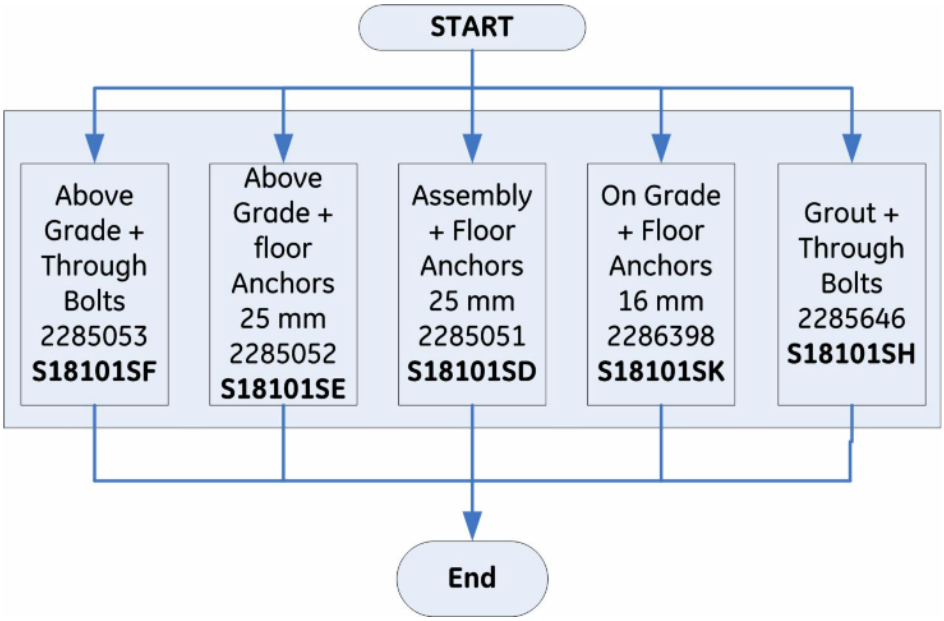

All GE supplied vascular system floor preparation are contained in catalog. There are some additional gantry/table mounting kits based on each mounting method: through bolts or floor anchors.

- Base plate assembly (mandatory) 2285048 – Refer to Table 5-7
- If there is no integrated baseplate plan (2359194) delivered with S18101SG, please refer to drawings 2359194 (Angio configuration Illustration 5-34) or 2359194 (Cardio configuration Illustration 5-35). Please order locally the integrated base plate based on this plan..
- Assembly and separation (Select kit) 2285050 – Refer to tables, Section 2.3
  - Above grade, Floor anchors without insert – 2285051.
  - Through bolts without insert – 2285646.
  - On grade, Floor anchors – 2286398.
  - Above grade, Floor anchors and insert – 2285052.
  - Through bolts and insert – 2285053.
  - Floor plate / Base plate Assembly – 2285632.
- Templates (select kit) – 2285054 – Refer to Section 2.4
  Angio/Cardio/Neuro templates – 2285056 (containing 2185979, 2127792 and 2360133 Innova 2000 and Innova 2100–IQ/3100/4100 templates).

2.3.1 2285048 - Base Plate Assembly

Table 5-7:

Item	Name	Part #	Description	Quan.	Notes
	Baseplate	2285059	12 Hole Floor Baseplate	1 pc	
	Lift Plate	2290939	Lifting Straps	2 pc	

Item	Name	Part #	Description	Quan.	Notes
	Hex Head Screw	5166535	Hex Head Screw 1/2”-13UNC L1 1/2” 12.9 Black	2 pc	
	Grease	2295599	Lithium grease lubricant 100g	2 pc	
	Doc	2230112-1-100	Vascular Gantry Baseplate and Table	1 pc	
	Doc	2229297-100	LCA/LCV+/LC+ System Baseplate and Omega IV/V/EP Table Floor Preparation	1 pc	
	Doc	2290880-2-100	Innova Pre-Installation Kit Install Procedure	1 pc	

NOTE: The 12 LC baseplate mounting screws are delivered with the system's LC Gantry. These screws are:

- cap screws 5166774; Screw Socket Head Cap 1/2”-20 UNF L1 1/2” 12.9 Black (used when installing new system on old baseplate (US threads))
- cap screws 2300939; Hex Head Cap screw; M12 40/40 Class 12.9 Black ; used to attach L-brackets on table shipping pallet to positioner dolly for table positioning (used when the new baseplate is metric threads)

2.3.2 2360538 – Tilt Table Add–On Kit

Table 5-8:

Item	Name	Part #	Description	Quan.	Notes
	Omega / Tilt common Plate	2361993	Plate to be anchored under the table	1 pc	
	Hex Screws	5120708	Screw M16x40x40 Inox A4-70 Pass	10 pc	4 only are used for Omega
	Washer, Flat	99125091	Washer Plain - Large 17 mm/40 mm	10 pc	
	Floor Anchor	46-302265P1	5/8 diameter 6” floor anchor bolts	6 pc	
	Dowel	2290937-2	Wood Dowel; 16 mm diameter	6 pc	
	Bolt, Hex	2296892	Through bolt M20-500-400	6 pc	
	Washer, Flat	99142204	Washer plain 21 mm/40 mm for Through Bolts; one for each bolt	6 pc	
	Plate	2290941	Special Steel Spacer Plate; 4 in. x 4 in. (102 mm x 102 mm); one for each bolt	6 pc	

Item	Name	Part #	Description	Quan.	Notes
	Nut, Hex	99141607	Hex Nut M20 STL galvanized, two for each bolt	12 pc	
	Dowel	2290937	Wood Dowel; 24 mm diameter	6 pc	
	Cap	5130979	Plastic Cap	10 pc	
	M16 Plug	5130982	Plastic Plug	6 pc	see note *

NOTE: * M16 plug is needed only when Omega V table is replaced by Tilt table. Therefore, these plugs have to be kept (bag let inside the table base) until Tilt table is installed (no need to fit them with Omega table).

2.3.3 2285050 – Assembly and separation select kit

2.3.3.1 2285051 – Above grade, Floor Anchors without insert (S18101SD)

Table 5-9:

Item	Name	Part #	Description	Quan.	Notes
	Floor Anchor	46-302265P1	Floor Anchor Bolt; 5/8 - 10x6” - (16 mm) drilling. (16 mm) drilling. 12 anchors for LC Positioner and 4 anchors for Table	16 pc	Above Grade anchor mounting method hardware
	Grout assy	2285055	- 10 kg Powdered Mortar Ardex K-15 - RTV Silicon Rubber Adhesive - 18 mm making tape adhesive - Open cell foam	1 kit	Used in constructing LC Positioner grout dam
	Dowel	2290937-2	Wood Dowel; (16 mm) diameter	12 pc	

2.3.3.2 2285646 – Through bolts without insert (S18101SH)

Table 5-10:

Item	Name	Part #	Description	Quan.	Notes
	Bolt, Hex	2296892	Through Bolt; M20 - 500-400 12 bolts for LC Positioner and 4 bolts for Table	16 pc	Through Bolt mounting method hardware
	Washer, Flat	99142204	Special Flat Washer for Through Bolts; one for each bolt	16 pc	same as above
	Plate	2290941	Special Steel Spacer Plate; 4 in. x 4 in. (102 mm x 102 mm); one for each bolt	16 pc	same as above

Item	Name	Part #	Description	Quan.	Notes
	Nut, Hex	99141607	Hex Nut M20 STL galvanized two for each bolt	32 pc	same as above
	Grout assy	2285055	- 10 kg Powdered Mortar Ardex K-15 - RTV Silicon Rubber Adhesive - 18 mm making tape adhesive - Open cell foam	1 kit	Used in constructing LC Positioner grout dam
	Dowel	2290937	Wood Dowel; 24 mm diameter	12 pc	

2.3.3.3 2286398 – On grade, Floor anchor (S18101SK)

Table 5-11:

Item	Name	Part #	Description	Quan.	Notes
	Floor Anchor	46-302265P1	Floor Anchor Bolt; 5/8-10 x 6 in. 12 anchors for LC Positioner and 4 anchors for Table	16 pc	On Grade anchor mounting method hardware
	Grout assy	2285055	- 10 kg Powdered Mortar Ardex K-15 - RTV Silicon Rubber Adhesive - 18 mm making tape adhesive - Open cell foam	1 kit	Used in constructing LC Positioner grout dam
	Dowel	2290937-2	Wood Dowel; 16 mm diameter	12 pc	
	Cable Conduit	2285057	Cable conduit - sheet metal part	1 pc	
	Vinyl Trim	2296890	Gripping Range; 1.5 to 3 mm THK	1 m	
	Vinyl Trim	2296891	Vinyl trim with segmented metal core 12 mm	1 m	

2.3.3.4 2285052 – Above grade, Floor anchor with insert (S18101SE)

Table 5-12:

Item	Name	Part #	Description	Quan.	Notes
	Floor Anchor	46-302265P1	Floor Anchor Bolt; 5/8-10 x 6 in. drilling 12 anchors for LC Positioner and 4 anchors for Table	16 pc	Above Grade anchor mounting method hardware

Item	Name	Part #	Description	Quan.	Notes
	Grout assy	2285055	- 10 kg Powdered Mortar Ardex K-15 - RTV Silicon Rubber Adhesive - 18 mm making tape adhesive - Open cell foam	1 kit	Used in constructing LC Positioner grout dam
	Dowel	2290937-2	Wood Dowel; 16 mm diameter	12 pc	
	Water Electric Separator	2268647	Manufactured part introduced in Positioner key hole to fit 1 electrical conduit of 6”.	1 pc	Electrical and water conduits separated inch size.

2.3.3.5 2285053 – Through bolts with insert (S18101SF)

Table 5-13:

Item	Name	Part #	Description	Quan.	Notes
	Bolt, Hex	2296892	Through Bolt; M20 - 500-400 12 bolts for LC Positioner and 4 bolts for Table	16 pc	Through Bolt mounting method hardware
	Washer, Flat	99142204	Special Flat Washer for Through Bolts; one for each bolt	16 pc	same as above
	Plate	2290941	Special Steel Spacer Plate; 4 in. x 4 in. (102 mm x 102 mm); one for each bolt	16 pc	same as above
	Nut, Hex	99141607	Hex Nut M20 STL galvanized two for each bolt	32 pc	same as above
	Grout assy	2285055	- 10 kg Powdered Mortar Ardex K-15 - RTV Silicon Rubber Adhesive - 18 mm making tape adhesive - Open cell foam	1 kit	Used in constructing LC Positioner grout dam
	Dowel	2290937	Wood Dowel; 24 mm diameter	12 pc	
	Water Electric Separator	2268647	Manufactured part introduced in Positioner key hole to fit 1 electrical conduit of 6”.	1 pc	Electrical and water conduits separated inch size.

2.3.3.6 2285632 – Floor plate / Base plate assembly (S18101SG)

Table 5-14:

Item	Name	Part #	Description	Quan.	Notes
	Hex Screws	2360523	Screw M16x30x30 Inox A4-80 Pass	12 pc	For floor plate / Base plate assembly
	Washer	99125091	Washer P 17 mm/40 mm	34 pc	24 are used for the positioner integration
	Hex Screws	99133570	Screw M16x40x40 Inox A4-80 Pass	10 pc	4 only are used for Omega

NOTE: The kit 2285632 Floor plate / Baseplate assembly is needed when the floor plate is installed. This part isn't GE part. It's ordered locally.

2.3.4 2285056 - A/C/N Templates

Table 5-15:

Item	Name	Part #	Description	Quan.	Notes
	A/C/N Templates	2185979	LC Positioner and Omega C/N Patient Table floor mounting template	1 pc	
		2127792	LCV+ Gantry and Omega A Patient Table floor mounting template	1 pc	
		2360133	Innova 4100 Template	1 pc	Specific for Innova 4100

NOTE: For further template details, refer to template drawing Illustration 5-31.

Illustration 5-34: Baseplate plan 2359194 - Angio configuration

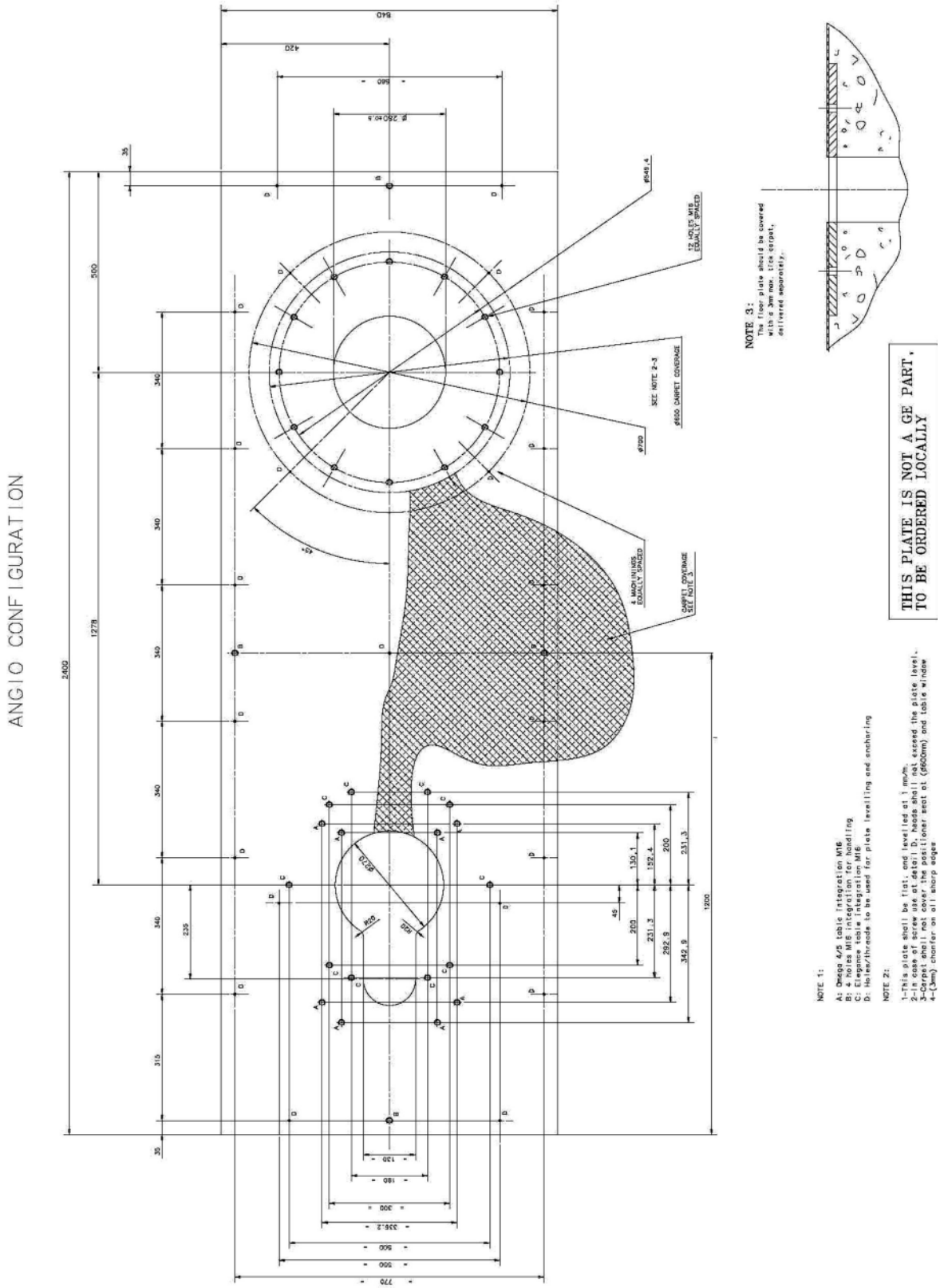

Illustration 5-35: Baseplate plan 2359194 - Cardio configuration

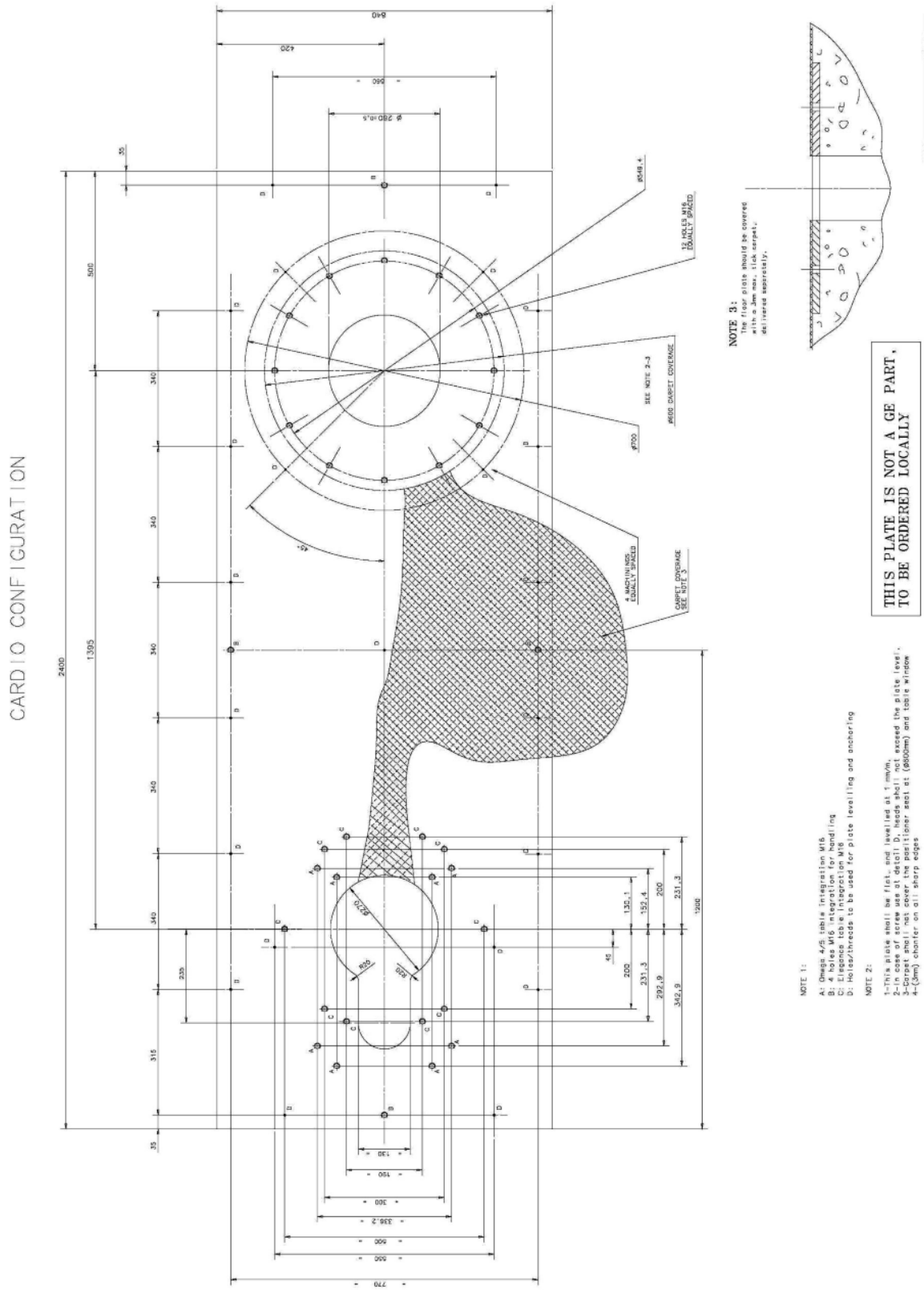

2.4 Injector Mounting Requirements

⚠CAUTION

Table accessory rail load consideration:

The maximum load per table accessory rail is 40 kg at 150 mm (60 N.m). Therefore:

- Only light extra load not exceeding 5 kg at 100 mm (i.e IV pole with its accessories, pressure head...) is authorized on the same table accessory rail as the injector.
- Never install injector and radiation protection on the same table accessory rail.
- Typical installation on the front table accessory rail is Smart handle or Smart box, Table Side System Control (TSSC), InnovaCentral/Touchscreen, Table panning device and cables support.
- If needed an optional rail can be installed at table foot end of the Omega V table for other options.

Chapter 6 Electrical Connections

1 Power Distribution

NOTE: All short AC power cable less than 3 meters, between peripherals and respective power strip, are not shown. All have a single phase line, a neutral line and a ground wire.

Illustration 6-1: Power distribution - CE

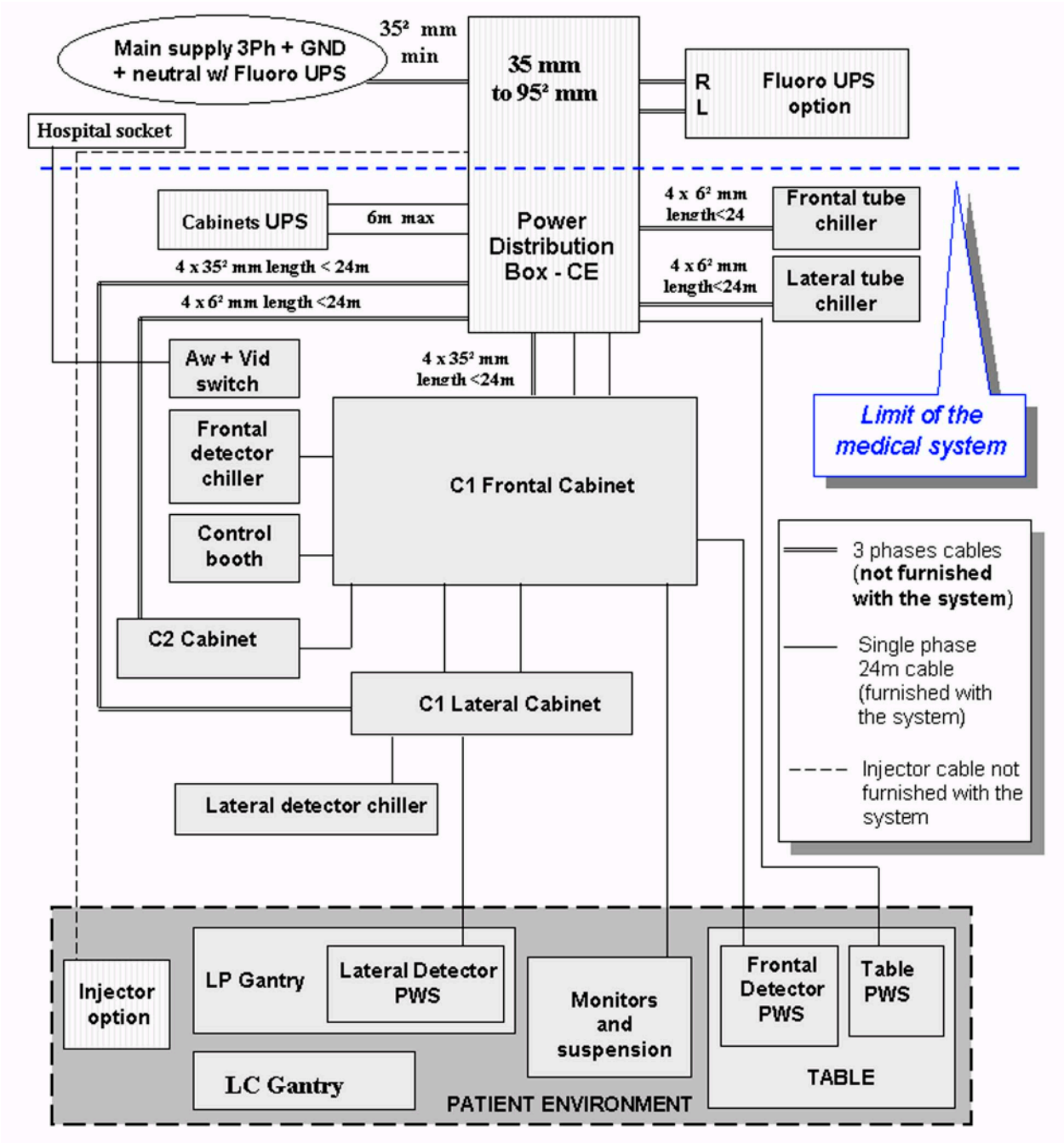

Illustration 6-2: Power distribution - UL

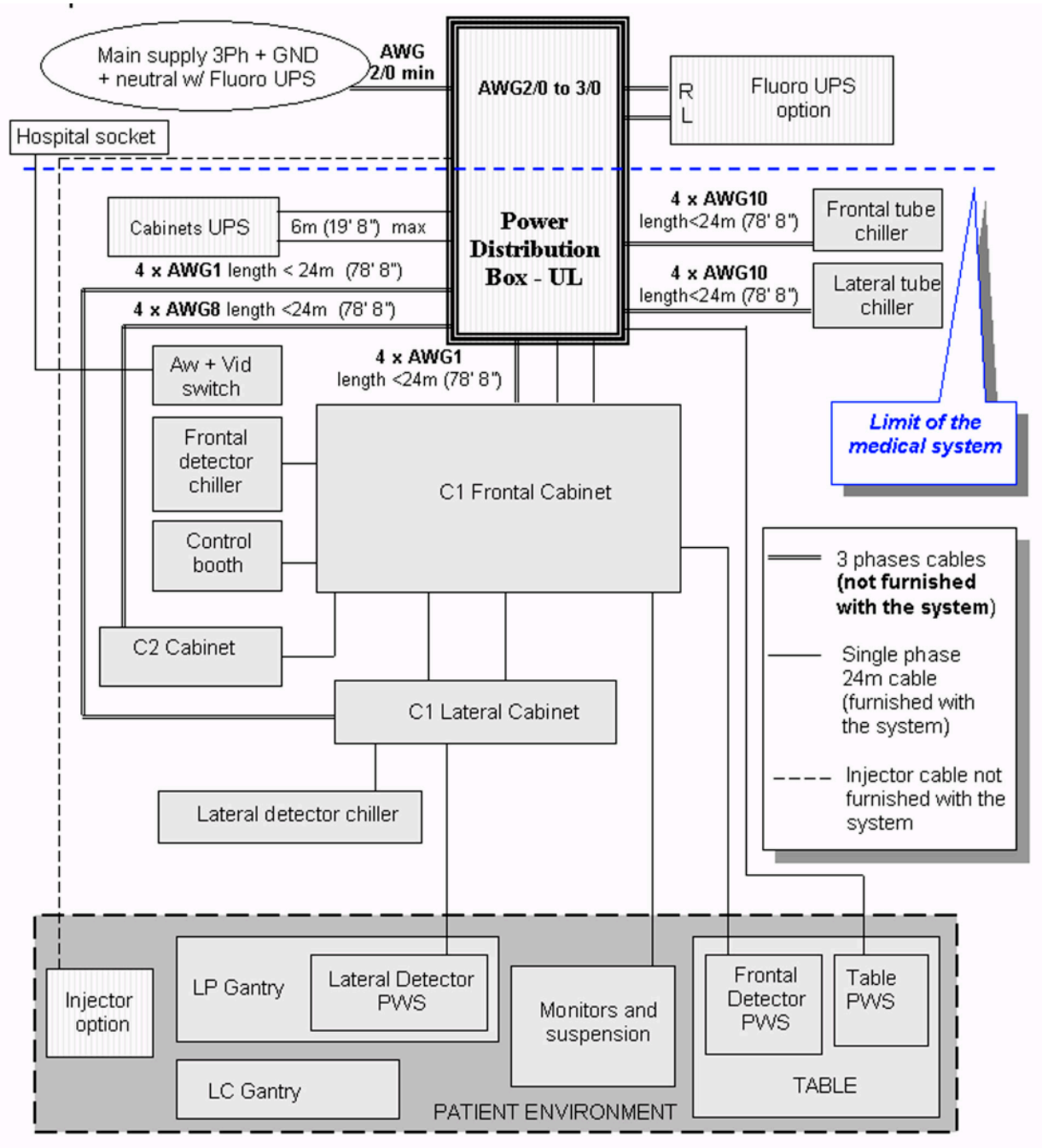

Cable	CE UPS configuration		UL UPS configuration			Max length
	Recommended (1)	Type	Max gauge	Recommended (1)	Type	
R rectifier	5 x 10 mm²	3ph+N+PE	AWG3	AWG6	3ph+N+PE	24 m (78ft 8in)
L out /load	5 x 10 mm²	3ph+N+PE	AWG3	AWG6	3ph+N+PE	24 m (78ft 8in)

(1) Size and type may be adapted locally per local regulation.

2 Power Distribution System

NOTICE

It is recommended to separate power supply cables from the other cables.

2.1 Power Distribution Box - CE

Illustration 6-3: PDB CE - 50 Hz

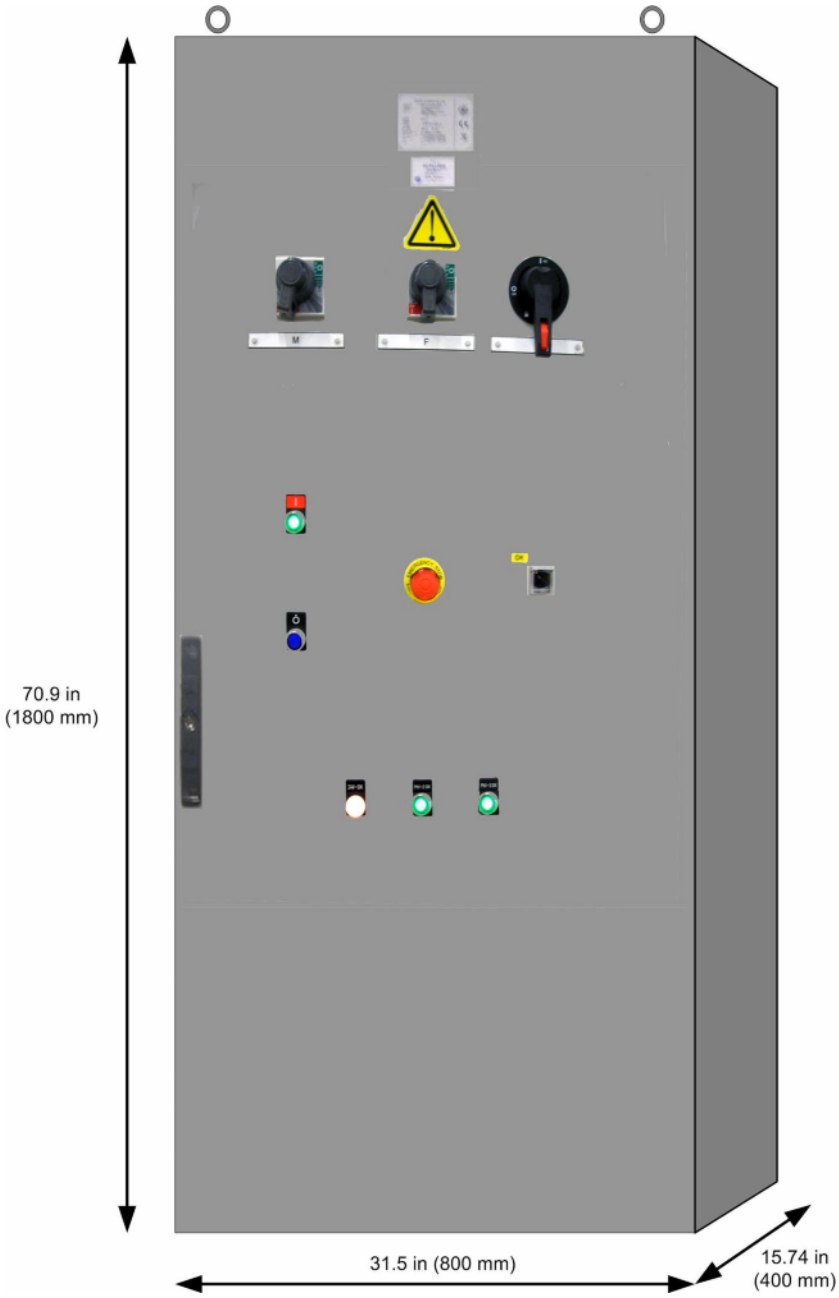

Illustration 6-4: PDB Schematic CE - 1/2

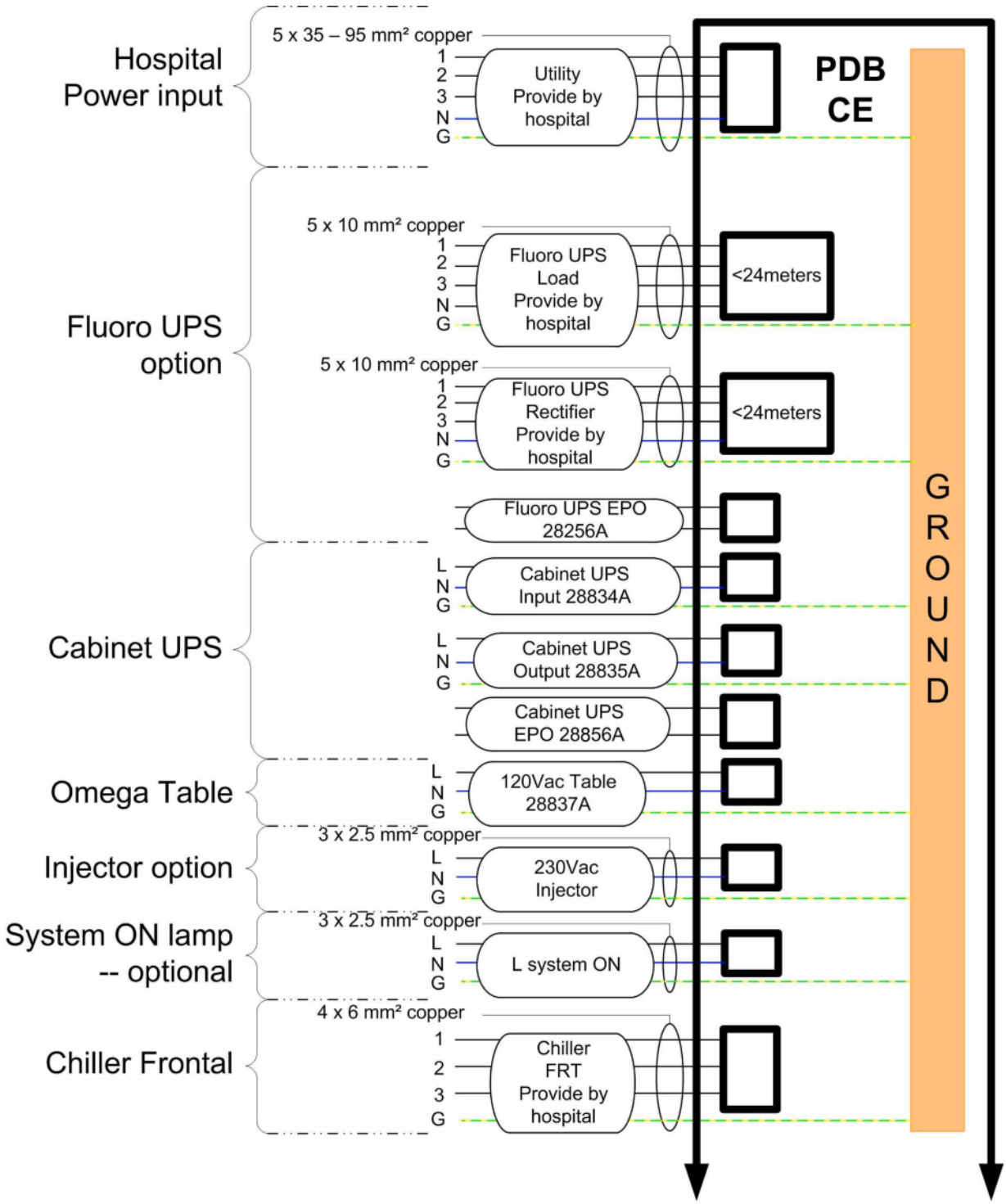

...Continued on next illustration...

Illustration 6-5: PDB Schematic CE - 2/2

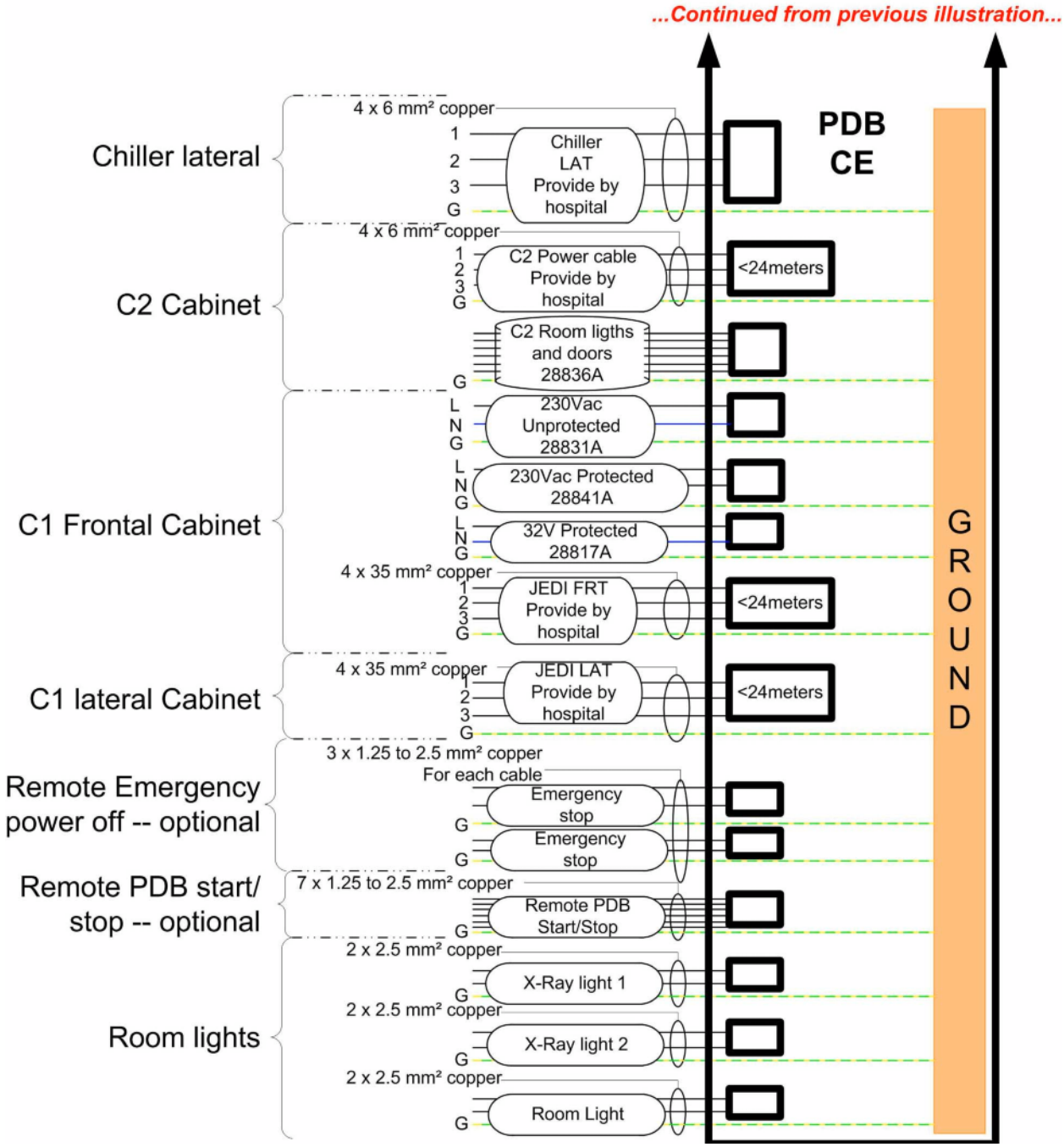

2.2 Power Distribution Box - UL

Illustration 6-6: PDB UL - 60 Hz (US only)

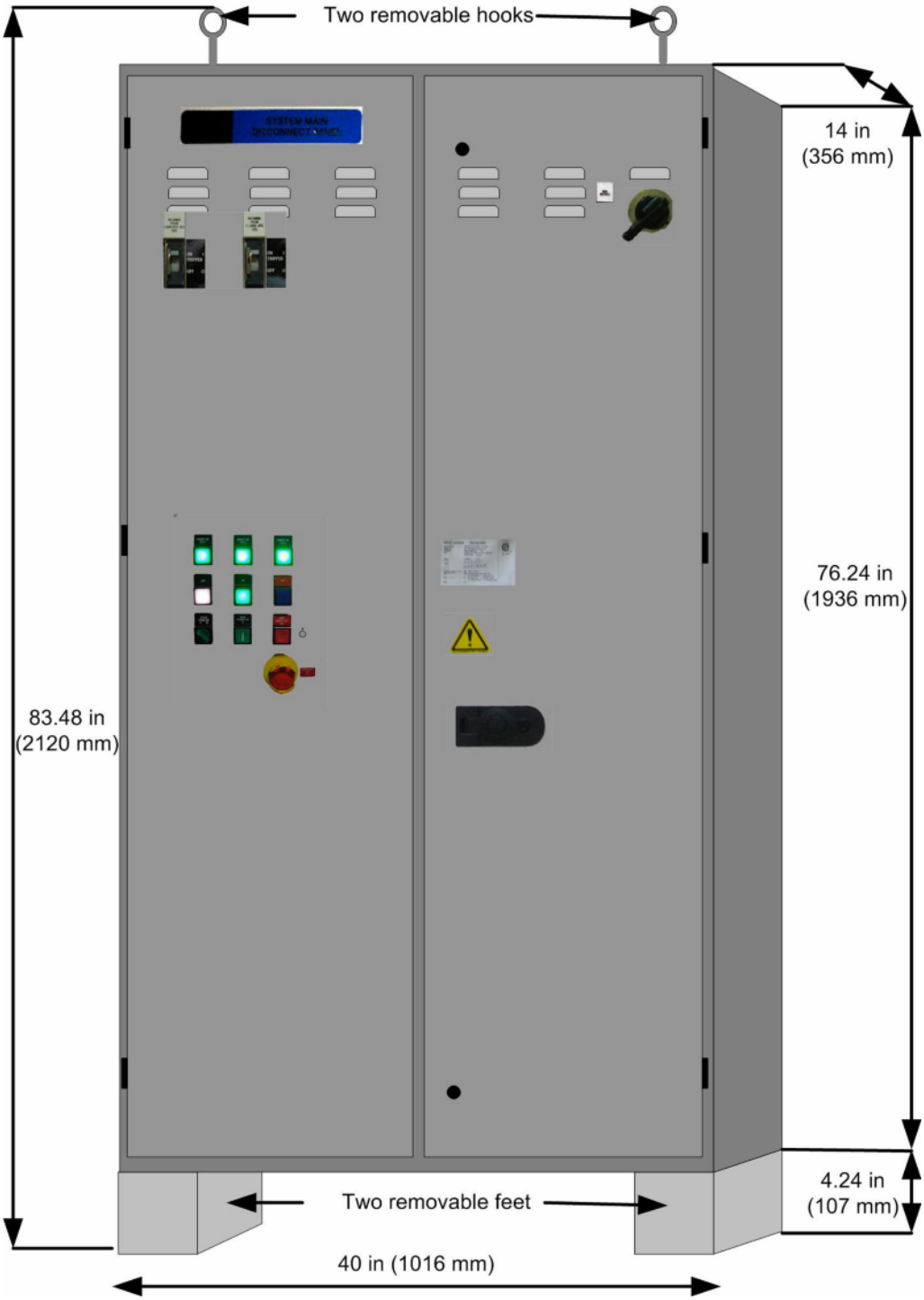

Illustration 6-7: PDB Schematic UL - 1/2

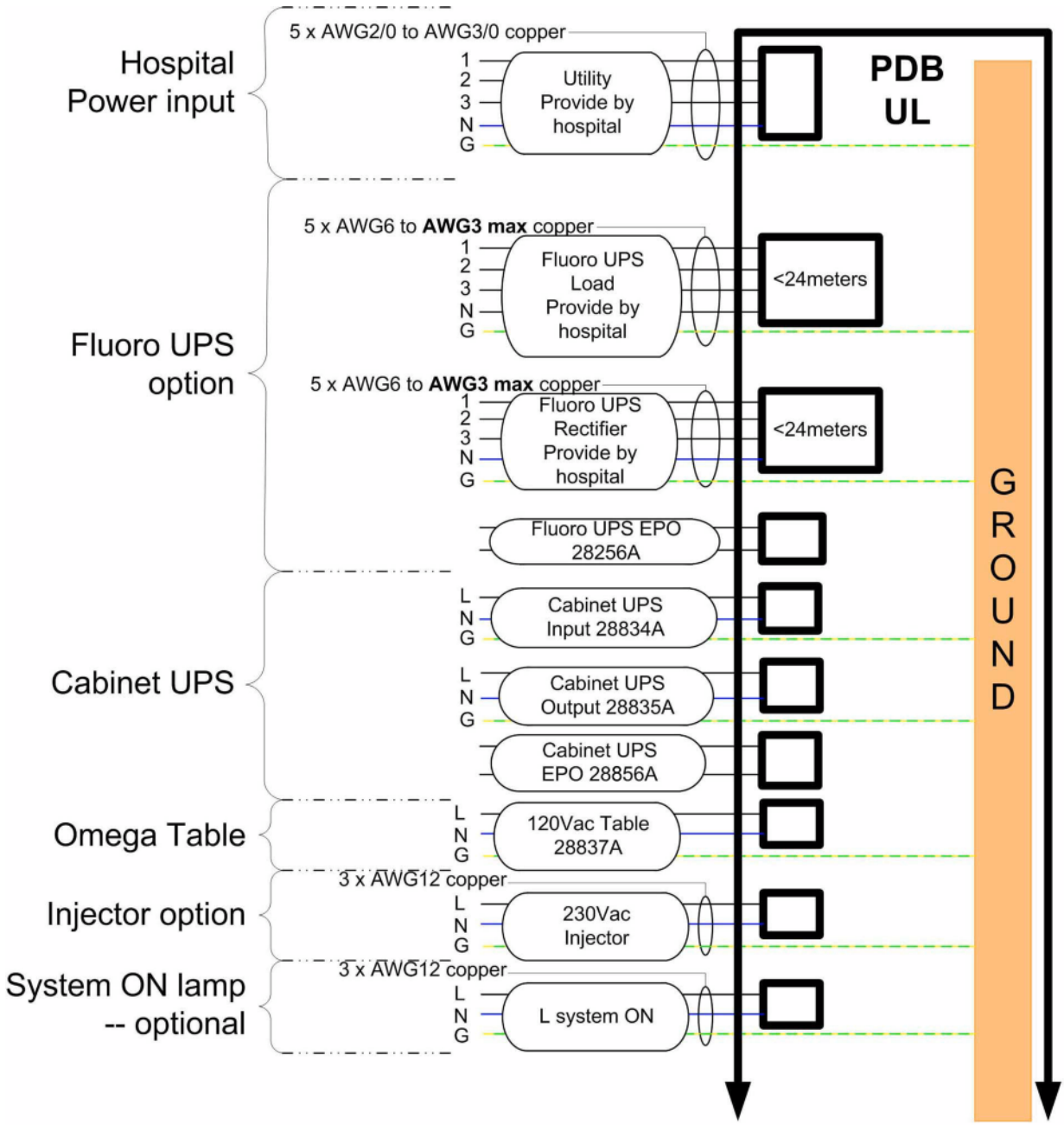

...Continued on next illustration...

Illustration 6-8: PDB Schematic UL - 2/2

...Continued from previous illustration...

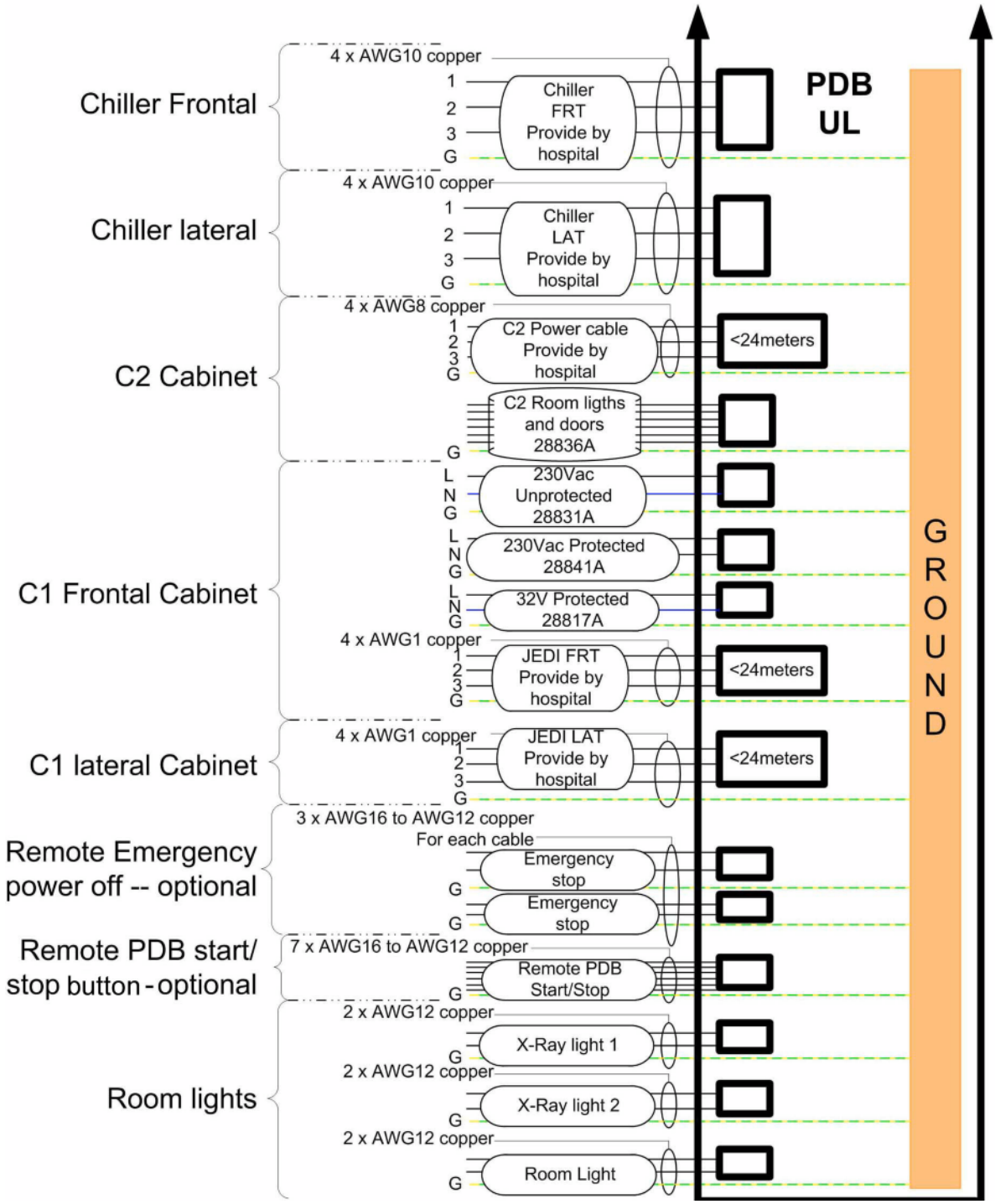

3 Grounding

A vascular lab is a critical care area and requires a special grounding system for patient safety. An equipotential grounding system is recommended for meeting patient safety requirements.

Reference: For general system grounding requirements and information on establishing an equipotential grounding system, refer to:

- Grounding Continuity – Job card in the Installation manual

NOTICE

All shielded cables shall have a connection to ground at each extremity without regard to the grounding to the scheme below.

NOTICE

Metallic covers on cable connectors shall be tested to ground.

Illustration 6-9: Grounding distribution

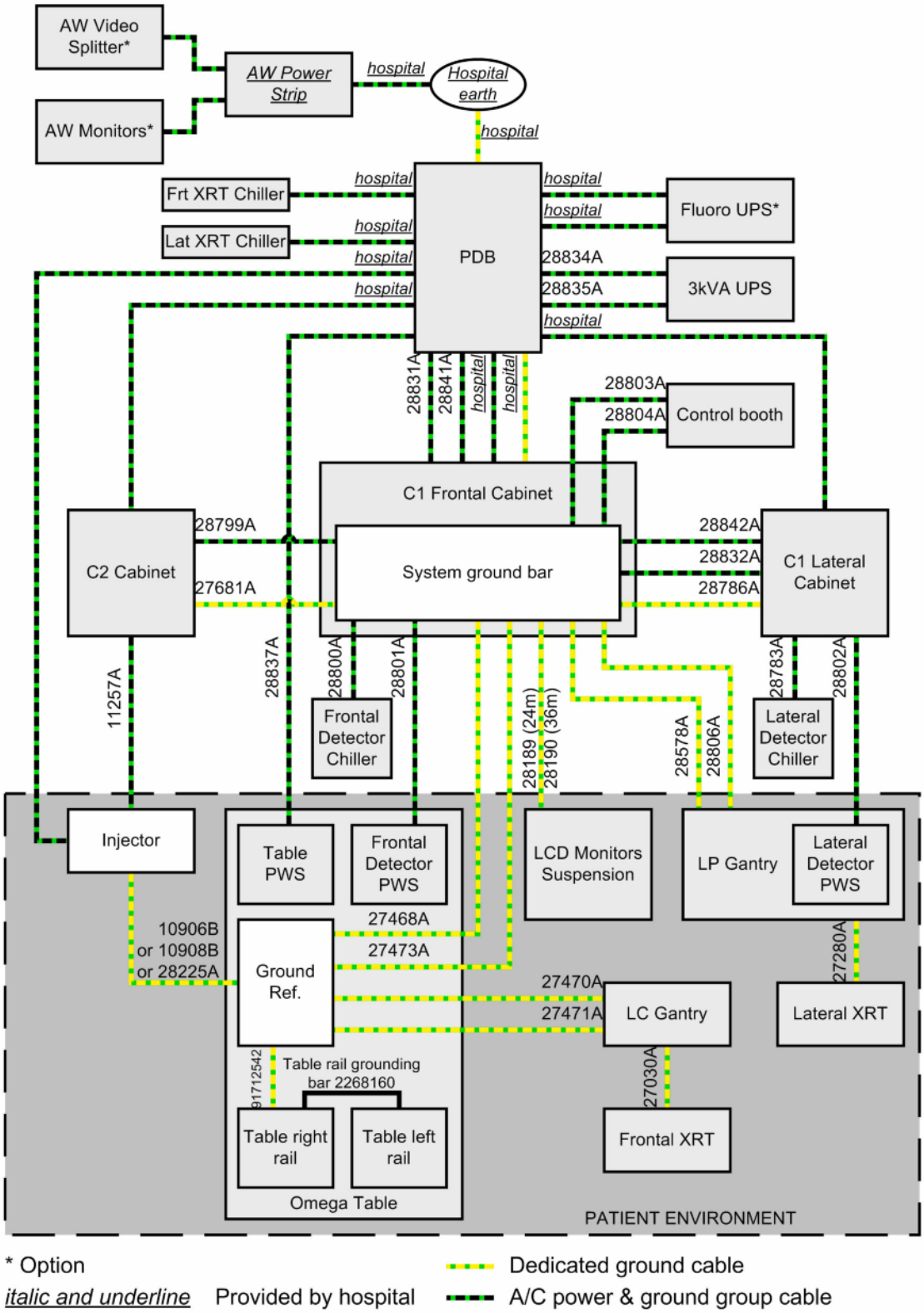

Table 6-1:

CABLE	FROM	TO	WIRE GAUGE	
28189	C1 Frontal Cabinet	LCD Monitor Suspension	AWG6	
28190	C1 Frontal Cabinet	LCD Monitor Suspension	AWG6	
2308096	C1 Frontal Cabinet	Jedi	AWG6	
2308096	C1 Lateral Cabinet	Jedi	AWG6	
10906B	Injector	Omega Table	AWG10	
10908B	Injector	Omega Table	AWG10	
11257A	C2 Cabinet	Injector	AWG22	
27030A	LC Gantry	Frontal XRT	AWG16	
27280A	LP Gantry	Lateral XRT	AWG16	
27468A	C1 Frontal Cabinet	Omega Table	AWG6	
27470A	Omega Table	LC Gantry	AWG6	
27471A	Omega Table	LC Gantry	AWG6	
27473A	C1 Frontal Cabinet	Omega Table	AWG6	
27508A	Omega Table	TSUI Remote Box	AWG6	
27681A	C1 Frontal Cabinet	C2 Cabinet	AWG6	
28225A	Injector	Omega Table	AWG10	
28578A	C1 Frontal Cabinet	LP Gantry	AWG6	
28783A	C1 Lateral Cabinet	Frontal Detector Chiller	AWG16	
28786A	C1 Frontal Cabinet	C1 Lateral Cabinet	AWG6	
28799A	C1 Frontal Cabinet	C2 Cabinet	AWG14	
28800A	C1 Frontal Cabinet	Frontal Detector Chiller	AWG16	
28801A	C1 Frontal Cabinet	Frontal Detector PWS	AWG16	
28802A	C1 Lateral Cabinet	Frontal Detector PWS	AWG16	
28803A	C1 Frontal Cabinet	Control Booth Power Strip 1	AWG6	
28804A	C1 Frontal Cabinet	Control Booth Power Strip 2	AWG6	
28806A	C1 Frontal Cabinet	LP Gantry	AWG6	
28807A	C1 Lateral Cabinet	Lateral Live Monitor	AWG6	
28808A	C1 Lateral Cabinet	Lateral Roadmap Monitor	AWG6	
28831A	PDB	C1 Frontal Cabinet	AWG14	
28832A	C1 Frontal Cabinet	C1 Lateral Cabinet	AWG14	
28834A	PDB	3kVA UPS	AWG14	
28835A	PDB	3kVA UPS	AWG14	
28837A	PDB	Omega Table	AWG14	
28839A	C1 Frontal Cabinet	Frontal Live Monitor	AWG6	
28840A	C1 Frontal Cabinet	Frontal Roadmap Monitor	AWG6	
28841A	PDB	C1 Frontal Cabinet	AWG14	
28842A	C1 Frontal Cabinet	C1 Lateral Cabinet	AWG14	
91712542	Omega Table	Table right rail	AWG18	
hospital	AW Power Strip	Ground	-	
hospital	PDB	C1 Frontal Cabinet	35 mm²	AWG1
hospital	PDB	C1 Frontal Cabinet	35 mm²	AWG2
hospital	PDB	C1 Lateral Cabinet	35 mm²	AWG1

CABLE	FROM	TO	WIRE GAUGE	
hospital	PDB	C2 Cabinet	6 mm²	AWG8
hospital	PDB	Fluoro UPS	10 mm²	AWG6
hospital	PDB	Fluoro UPS	10 mm²	AWG6
hospital	PDB	Frontal XRT Chiller	6 mm²	AWG10
hospital	PDB	Ground	35 mm² mini	AWG2/0 mini
hospital	PDB	Injector	AWG10	
hospital	PDB	Lateral XRT Chiller	6 mm²	AWG10
Table rail grounding bar 2268160	Table right rail	Table left rail	N/A	

4 Power and Grounding Recommendations

- A breaker with cut-out capability shall be installed by the customer (or his contractor) next to the PDB. It is needed for the LOTO procedure in front of the PDB.
- The main facility ground conductor to the PDB shall be copper wire and the minimum size as required by the local coding regulations, such as the NEC. For countries, which are not covered by local requirement (like NEC), the ground wire to earth should be at minimum of AWG 2/0 (150 A breaker) UL or 35mm^2 (80 A breaker) CE, or same size (100%) as feeder wires, whichever is larger.
- Power cables must not be used to supply other systems
- Cables shall be in conformity with local regulation (UL, CSA, IEC, CCC).

Table 6-2:

Max Line Impedance for feeder line between Generator cabinet and Hospital						
V	380	400	420	440	460	480
Ohms	0.09	0.096	0.102	0.108	0.114	0.12

NOTE: These 3 phases cables are not furnished by GE Healthcare. Provided by installer.

- These cables must be kept separated as much as possible from room system cables.
- The shield of any shielded cable coming from the distribution cannot replace the ground wire.

Reference: For specific Vascular system grounding maps and connection details, refer to the MisMap and mis chart listed in MIS (Master Interconnect System).

Table 6-3: System FEEDER from hospital

UL		Power supply voltage 480 V		
		Panel (PDB) to C1 run in m (ft)		
		8 (26)	*16 (52)*	*24 (79)*
Feeder run length:	**10 m (30 ft)**	2/0	2/0	2/0
	20 m (70 ft)	2/0	2/0	2/0
	30 m (100 ft)	2/0	2/0	3/0
	40 m (130 ft)	2/0	2/0	250
	50 m (160 ft)	2/0	3/0	300
	60 m (200 ft)	3/0	4/0	400
	80 m (260 ft)	4/0	350	600
	100 m (330 ft)	300	500	see Note
	120 m (390 ft)	400	600	see Note

WARNING

RECOMMENDED FEEDER CABLE GAUGE : FOR PHASES, NEUTRAL & GROUND PDB INPUT TERMINALS ACCEPT 2/0 AND 3/0 AWG. BIGGER CABLES NEEDS A SIZE REDUCTION BEFORE PDB ENTRY.

CE		Power supply voltage								
		380 V			400 V			415 V		
		Panel (PDB) to C1 cabinet run								
		8 m	*16 m*	*24 m*	*8 m*	*16 m*	*24 m*	*8 m*	*16 m*	*24 m*
Feeder run length:	**10 m**	35	35	35	35	35	35	35	35	35
	20 m	35	35	70	35	35	50	35	35	50
	30 m	50	70	95	35	50	70	35	50	70
	40 m	50	70	120	50	70	95	50	70	95
	50 m	70	95	185	70	95	120	70	95	120
	60 m	95	120	240	70	95	185	70	95	150
	80 m	120	185	300	95	150	300	95	120	240
	100 m	185	240	see note	150	240	see note	120	185	see note
	120 m	240	300	see note	185	300	see note	185	240	see note

NOTICE

Recommended feeder cable section in mm² : for PHASES, NEUTRAL & GROUND PDB input terminals accept 35² to 95². Bigger cables needs a size reduction before PDB entry.

NOTE: Increasing transformer power will decrease its voltage loss and feeder cables section. To be calculated site by site.

5 IVUS Rev 1 Option

5.1 Wiring Diagram

The connection cables between the IVUS Control Room and Procedures Room components run in a dedicated under floor conduit (see Section 5.2).

A GND wire between the C1 cabinet and the IVUS CPU runs in the underfloor conduit prepared for the Control Booth cables between Equipment Room and Control Room.

Illustration 6-10:

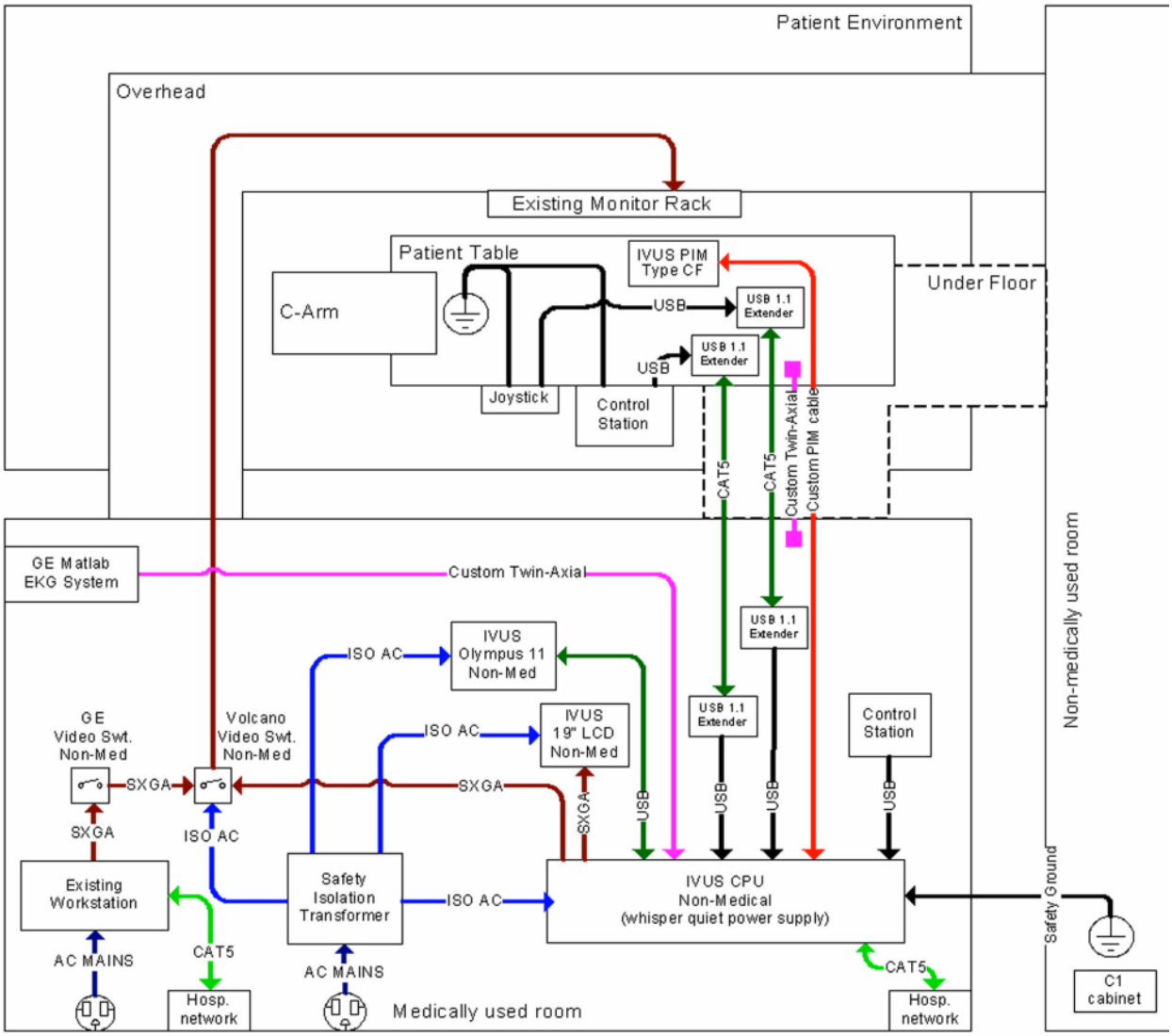

5.2 IVUS Floor Conduits

A 3 inches and max. 25 m long conduit between Control and Patient Rooms shall be prepared below the floor for the IVUS Innova interconnection cables.

- Locate the position of the IVUS components in the Control Room, according to the workflow requirement of the operators.

- Establish a 76 mm (3”) conduit below floor from the IVUS CPU location in the Control Room, to the foot end area of the Patient Table in the Procedures Room:
  - Locate the Procedures Room exit of the conduit close to the centerline of the Patient Table
  - Locate it as close to the Patient Table base as possible, considering :
    - Room for access to the table for service purposes
    - Limitation from other cables connected to the table
    - Location of the table plate
    - Location of Mac-Lab conduit
    - Location of Physio or Med Gases connections
    - The IVUS cables are moving cables, they have to allow the Patient Table motions (Panning, Lifting and Rotating)
- Use similar solutions (i.e. protection against cleaning fluids, etc.) as it is used for the Mac-Lab conduit
- See also guidance on Typical Layout drawing 4-58f sheets E1 and S2, showing Mac-Lab and P/M Gas location recommendations.

5.3 Run Interconnection cables through the Conduit

Use the IVUS PIM (#806365003) as reference to the procedures below.

- Unpack , and check the completeness of the Preinstallation kit :
  - 1pcs - Custom PIM cable 30 m (98 ft, 5 in) - Volcano ID :806452001
  - 2pcs - CAT5 cable 30 m (98 ft, 5 in) - Volcano ID :803391001
  - 1pcs - Custom Twin axial cable - Volcano ID :806380001
  - 1pcs – Ground Cable, 30 m (98 ft, 5 in) s5i – Volcano ID :806889001
  - 1pcs - IVUS preinstallation Manual - Volcano ID :806365003
- Install 806889001 Ground Cable through the Control Booth conduit (see note)
- Install the cables through the IVUS conduit from the Control Room end :
  - 806452001 Room - PIM cable, round shaped connector end to the Procedures
  - 803391001 - Ethernet cable (1pcs)
- Install the optional cables through the IVUS conduit from the Control Room end :
  - 803391001 - Ethernet cable if 2 IVUS remote control items will be installed 1 IVUS Control Station and 1 IVUS Joystick)
  - 806380001 - ECG cable in case, if NON Mac-Lab ECG will be installed

NOTE: For the ground cable, see the IVUS service manual for special instructions concerning cable running and cutting .

NOTE: If the installation has the **MaC-Lab ECG** in the configuration, the ECG cable shall not be run through the conduit, it will be used in the Control Room **to connect Mac-Lab and IVUS PCs**.

NOTE: You should consider running the ECG cable through the conduit in case, the customer requires interconnecting to a **NON Mac-Lab ECG** at the table base.

In this case you **shall hide the unconnected cable in the conduit** for future expansion options.

NOTE: Same applies to the 2nd Ethernet cable, if a later extension of the IVUS remote controls expected.

- **Ensure sufficient cable length on the Procedures Room end of the cables according to the table below**

Cable	Free length from the conduit exit
PIM cable	2.4 m (8 ')
Control Station cable	2.1 m (7 ')
Joystick cable	2.7 m (9 ')
ECG cable	Depends on the ECG location

NOTE: The incorrect cable length might cause reliability issues during the operation !

Make sure, that the out of conduit parts of the cables with the connectors are properly protected during the rest of the installation

5.4 Electrical Requirements

The power for the IVUS hardware components delivered with the product (PC, monitor, Video Switch and printer) is supplied through the IVUS Safety Isolation Transformer .

The customer is in charge to provide a wall outlet to supply the Safety Isolation Transformer. This outlet shall be located in the control room suitable to the IVUS components positioning. The maximum rated power of the Safety Isolation Transformer is 600 VA, the maximum continuous system power consumption for s5i and s5iGE IVUS systems is 400 VA.

The s5i and s5iGE IVUS systems can be configured to work on 100, 120, or 230 VAC. The difference between the supported configurations is limited switching the fuse values. See table below :

Line Voltage	Fuse value
100 VAC	8 A
120 VAC	6.3 A
230 VAC	3.15 A

Frequency: 50/60 Hertz

The country specific power cords are pre-selectable in the GTC.

NOTICE

The IVUS will be connected to a standard hospital outlet. There is no grounding requirement specified at site preparation.

5.5 Ethernet Network Requirement

The IVUS CPU located in the control room shall be connected to the hospital Ethernet network. A wall Ethernet outlet shall be available in the control room to connect the device.

DICOM Image Storage:

Saving patient cases to DVD: The archived images are stored in DICOM format with Volcano s5i system acting as a File Set Creator (FSC), following the guidelines in the 2004 DICOM 3.0 specification.

Sending patient cases to DICOM server: The Volcano s5i supports the ultrasound multi-frame image storage SOP class as an SCU (service class user).

For more information, see the Volcano s5 DICOM Conformance Statement located on line at :

http://www.volcanocorp.com/pages/products/s5/productinfo/s5_DCS.pdf

6 IVUS Rev 2 Option

6.1 Wiring Diagram

The connection cables between the IVUS Control Room and Procedures Room components run in a dedicated under floor conduit (see Section 6.2).

A GND wire between the C1 cabinet and the IVUS Rev 2 CPU runs in the underfloor conduit prepared for the Control Booth cables between Equipment Room and Control Room.

Illustration 6-11:

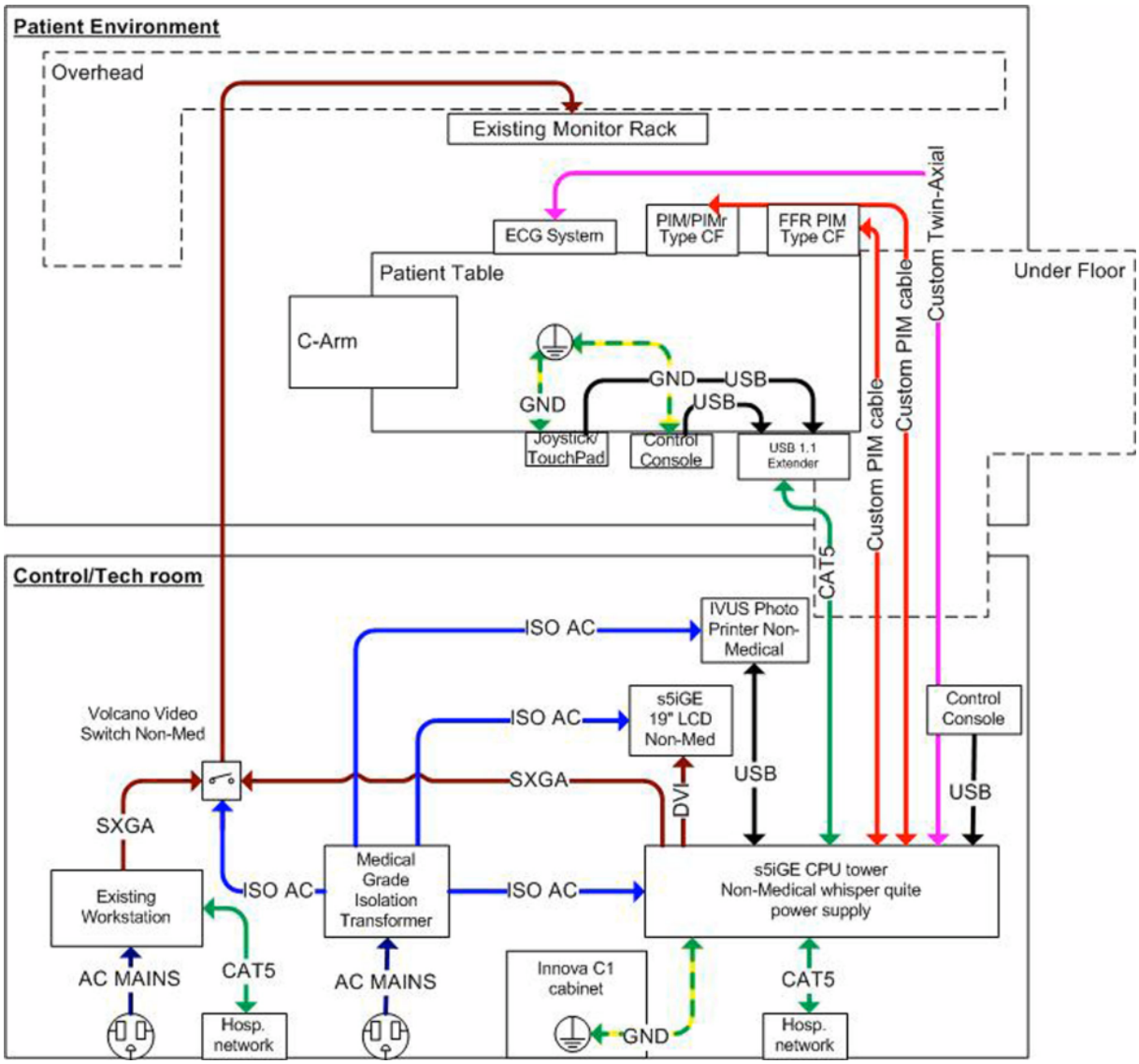

6.2 IVUS Floor Conduits

A 3 inches and max. 25 m long conduit between Control and Patient Rooms shall be prepared below the floor for the IVUS Innova interconnection cables.

- Locate the position of the IVUS components in the Control Room, according to the workflow requirement of the operators.
- Establish a 76 mm (3”) conduit below floor from the IVUS CPU location in the Control Room, to the foot end area of the Patient Table in the Procedures Room:
  - Locate the Procedures Room exit of the conduit close to the centerline of the Patient Table
  - Locate it as close to the Patient Table base as possible, considering :
    - Room for access to the table for service purposes
    - Limitation from other cables connected to the table
    - Location of the table plate
    - Location of Mac-Lab conduit
    - Location of Physio or Med Gases connections
    - The IVUS cables are moving cables, they have to allow the Patient Table motions (Panning, Lifting and Rotating)
- Use similar solutions (i.e. protection against cleaning fluids, etc.) as it is used for the Mac-Lab conduit
- See also guidance on Typical Layout drawing 4-58f sheets E1 and S2, showing Mac-Lab and P/M Gas location recommendations.

6.3 Run Interconnection cables through the Conduit

Use the IVUS Rev 2 PIM (#806365002) as reference to the procedures below.

- Unpack , and check the completeness of the Preinstallation kit :
  - 1 pcs - Custom PIM cable 30 m (98 ft, 5 in) - Volcano ID :806452001
  - 1 pcs - CAT5 cable 30 m (98 ft, 5 in) - Volcano ID :807055001
  - 1 pcs - Custom Twin axial cable - Volcano ID :806380001
  - 1 pcs - Ground Cable, 30 m (98 ft, 5 in) s5i – Volcano ID :806889001
  - 1 pcs - IVUS Rev 2 Preinstallation Manual - Volcano ID :806365002
- Install 806889001 Ground Cable through the Control Booth conduit (see note)
- Install the cables through the IVUS conduit from the Control Room end :
  - 806452001 PIM cable, round shaped connector end to the Procedures Room
  - 807055001 - Ethernet cable (1 pcs)
- Install the optional cables through the IVUS conduit from the Control Room end :
  - 806380001 - ECG cable in case, if NON Mac-Lab ECG will be installed
  - 808631002 – FFR cable option - 15m
  - 808632002 – FFR cable option - 27m

NOTE: For the ground cable, see the IVUS Rev 2 service manual for special instructions concerning cable running and cutting .

NOTE: If the installation has the **MaC-Lab ECG** in the configuration, the ECG cable shall not be run through the conduit, it will be used in the Control Room **to connect Mac-Lab and IVUS PCs**.

NOTE: You should consider running the ECG cable through the conduit in case, the customer requires interconnecting to a **NON Mac-Lab ECG** at the table base.

In this case you **shall hide the unconnected cable in the conduit** for future expansion options.

NOTE: Same applies to the 2nd Ethernet cable, if a later extension of the IVUS remote controls expected.

- **Ensure sufficient cable length on the Procedures Room end of the cables according to the table below**

Cable	Free length from the conduit exit
IVUS PIM cable *	2.4 m (8 ')
FFR cables for Pimette **	0m (0')
Control Station cable	2.1 m (7 ')
Joystick cable	2.7 m (9 ')
ECG cable	Depends on the ECG location

* Consider the 12' length of the PIMr cable, if PIMr exists.

** Pimette has 3 m cable.

NOTE: The incorrect cable length might cause reliability issues during the operation !

Make sure, that the out of conduit parts of the cables with the connectors are properly protected during the rest of the installation

6.4 Electrical Requirements

The power for the IVUS hardware components delivered with the product (PC, monitor, Video Switch and printer) is supplied through the IVUS Safety Isolation Transformer.

The customer is in charge to provide a wall outlet to supply the Safety Isolation Transformer. This outlet shall be located in the control room suitable to the IVUS components positioning. The maximum rated power of the Safety Isolation Transformer is 600 VA, the maximum continuous system power consumption for s5i and s5iGE IVUS systems is 400 VA.

The s5i and s5iGE IVUS systems can be configured to work on 100, 120, or 230 VAC. The difference between the supported configurations is limited switching the fuse values. See table below :

Line Voltage	Fuse value
100 VAC	8 A
120 VAC	6.3 A
230 VAC	3.15 A

Frequency: 50/60 Hertz

The country specific power cords are pre-selectable in the GTC.

NOTICE

The IVUS Isolation Transformer will be connected to a standard hospital outlet. There is no grounding requirement specified at site preparation.

6.5 Ethernet Network Requirement

The IVUS CPU located in the control room shall be connected to the hospital Ethernet network. A wall Ethernet outlet shall be available in the control room to connect the device.

DICOM Image Storage:

Saving patient cases to DVD: The archived images are stored in DICOM format with Volcano s5i system acting as a File Set Creator (FSC), following the guidelines in the 2004 DICOM 3.0 specification.

Sending patient cases to DICOM server: The Volcano s5i supports the ultrasound multi-frame image storage SOP class as an SCU (service class user).

NOTE: All this applies to the IVUS mode of the s5i/GE, not for the FFR mode.

For more information, see the Volcano s5 DICOM Conformance Statement located in the 806365-005 Volcano Service Manual.

7 X-Ray ON Lamp Distribution

The fitter shall install an X-Ray On lamp in the Exam room, and in the control room if necessary, outside the patient area, so that they are connected to the equipment through connection terminals.

NOTE: Innova 2121-IQ/3131-IQ provides 24 VAC for driving X-Ray ON line.

Hospital or contractor to provide 1.5 mm^2 (AWG 14) wires to connect to the system.

X-Ray ON lamp is active during X-Ray exposures.

WARNING

THE X-RAY ON LAMP MUST BE INSTALLED IN THE EXAM ROOM TO CONFORM TO INTERVENTIONAL STANDARD IEC/EN 60601-2-43. SIGNAL INDICATING THE X-RAY ON SHALL BE PERCEPTIBLE BY THE OPERATOR IN ALL THE LOCATIONS DEFINED FOR THE PERSONNEL WHO MAY RECEIVE SCATTERED RADIATION.

In the control room, an additional X-Ray on light must be installed if the console (VCIM) indicator cannot be perceived by all the persons in the control room.

Illustration 6-12: X-Ray ON cabling between C2 cabinet and PDB

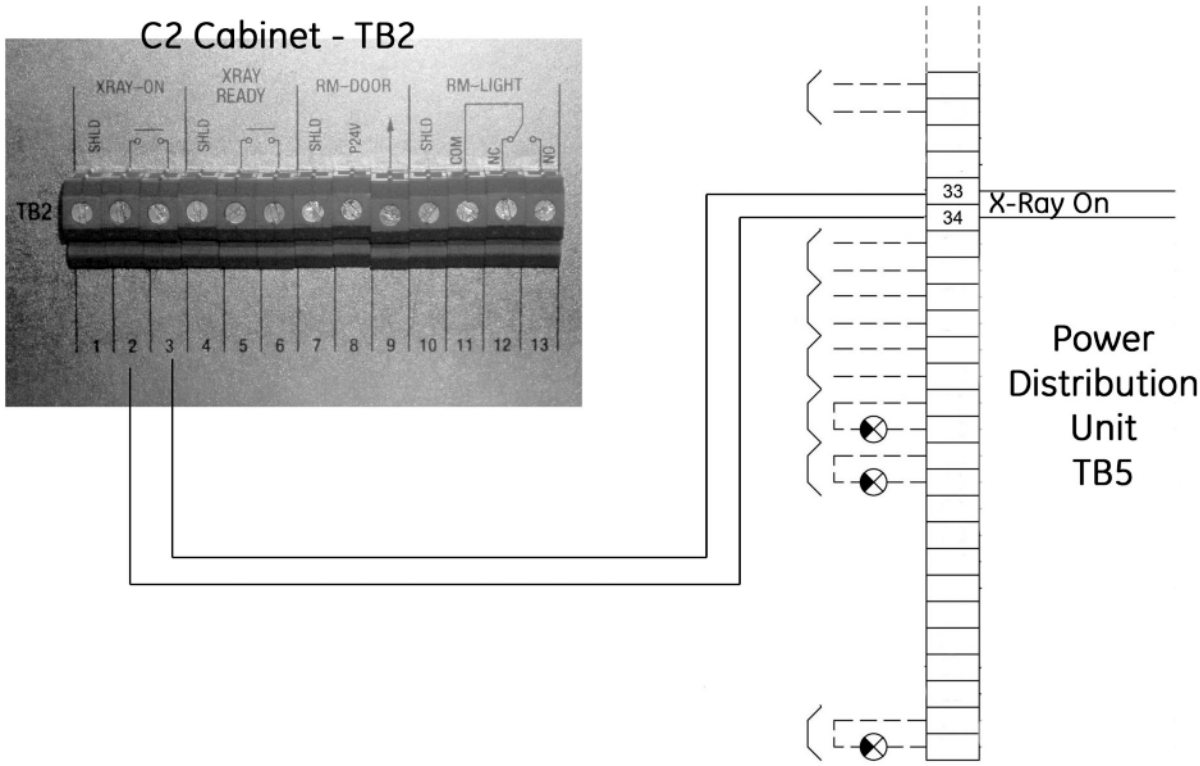

8 Ready For X-Ray Lamp

Innova 2121-IQ/3131-IQ provides contacts for driving a **Ready for X-Ray** lamp. These contacts are terminals **5** and **6** of TB2 bulkhead connector of the C2 cabinet.

Illustration 6-13: X-Ray READY cabling between C2 cabinet and PDB

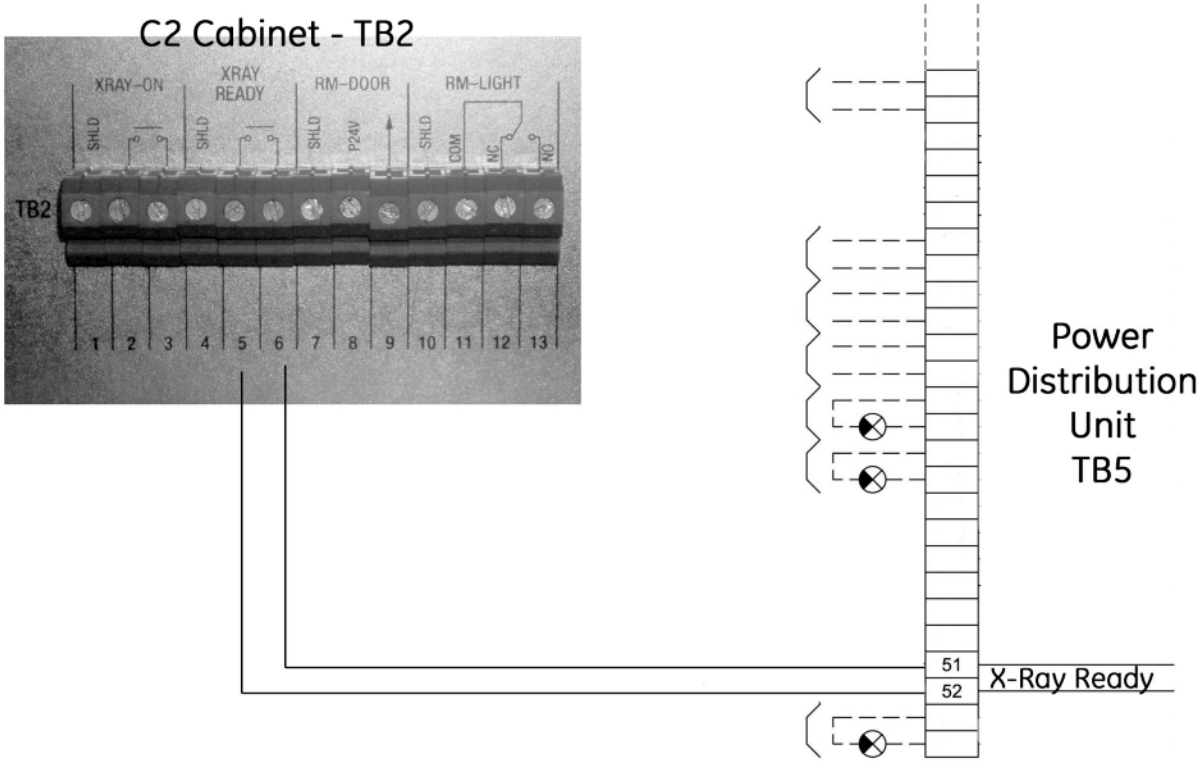

NOTE: Check local regulations if this indication is required.

If needed, the lamp needs to be provided by the hospital or their contractor.

9 Room Light Distribution

Innova 2121-IQ/3131-IQ has the ability to control an external relay that applies power to the room light (dry contacts).

The relay is to be provided by the hospital or contractor.

The wire size to connect to the C2 cabinet is 1.5 mm^2 (AWG 14).

Relay rating is max 600 VAC

Illustration 6-14: ROOM LIGHT cabling between C2 cabinet and PDB

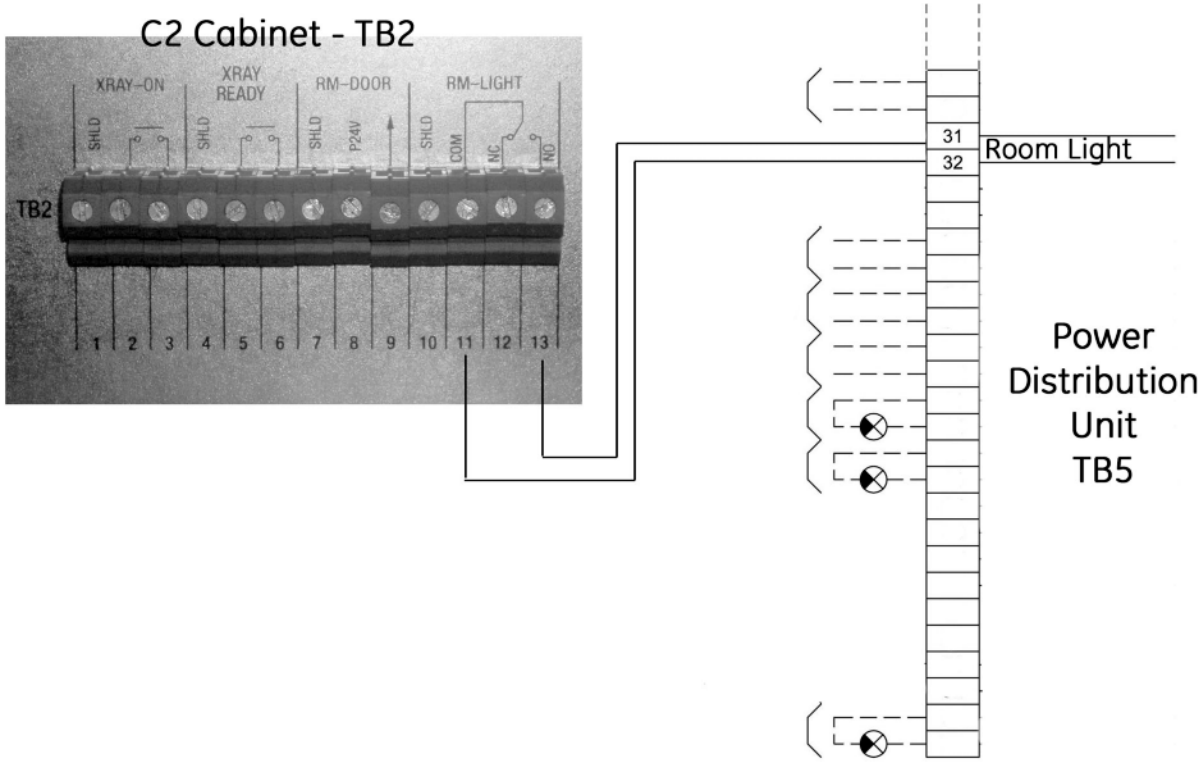

10 Room Speaker

The remote speaker provides the operator in the exam room, the indication of record exposure sequence (same level information as provided by the control room control panel).

The speaker must be installed in the exam room out of the patient vicinity to give easy access to the FE for maintenance operations and to medical staff to adjust the tone signal level and to be able to see the power LED indicator.

Illustration 6-15:

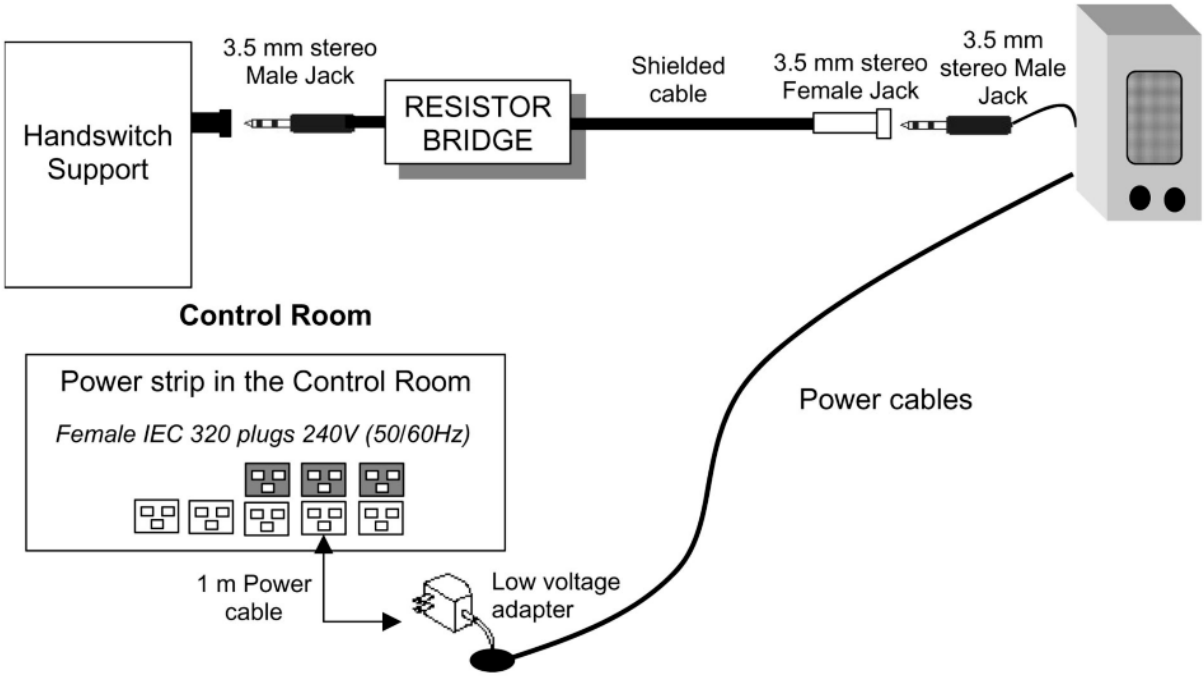

WARNING

THE REMOTE SPEAKER KIT SHALL NOT BE INSTALLED IN THE PATIENT VICINITY.

Patient Vicinity Definition : see *Patient Environment Equipment* in Chapter 4, Room Layout Considerations

11 Door Interlocks

⚠CAUTION

IEC 60601–2–43 requires not to install door interlocks. It is the responsibility of the field service to check that this requirement is not in contradiction with local regulation. In case of conflict, follow local regulation. No other measures employed for radiation protection should cause the interruption of irradiation and any other disturbance of a procedure in progress.

Illustration 6-16: C2 cabinet bulkhead RM DOOR connecting

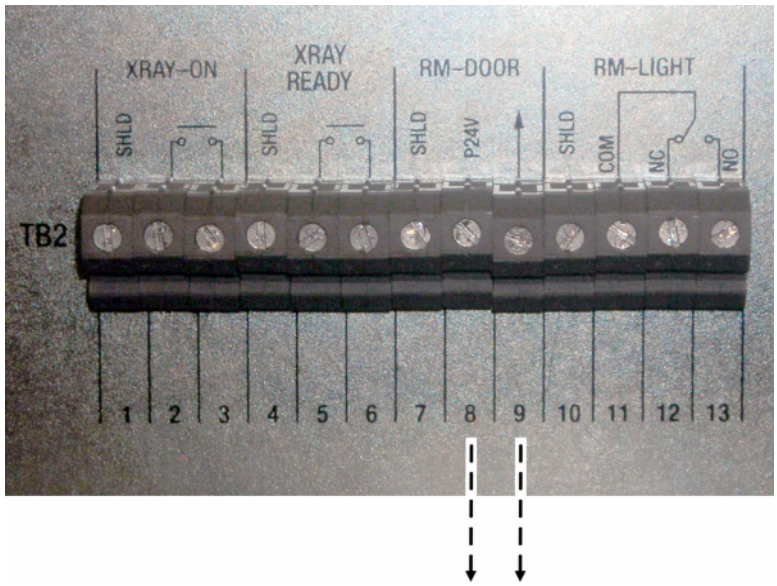

12 Emergency

12.1 Partial UPS Fluoro (option)

A Fluoro UPS (20 kVA) has been designed for Innova 2121-IQ, 3131-IQ. This partial UPS lets the customer complete an exam in fluoro mode in case of a power failure. The autonomy provided by this UPS is 5 minutes of fluoro every 24 hours.

12.2 Full UPS Record (compatability)

An UPS sized for a minimum of 150 kVA is required to supply the system in record mode. Such an UPS would provide to the customer about 10 minutes of autonomy.

The UPS output shall follow the same output specifications as shown in *Optional Isolation transformer specifications* in Chapter 3, .

Contact your local GE Healthcare representative for more information and/or public power distribution analysis.

13 Injectors

The injector is provided with an additional ground cable (P/N #2135737) to meet equipotentiality requirement at patient vicinity.

Injector emergency power off:

- if no emergency power off is required for the injector, the injector can be powered from a wall outlet socket.
- if emergency power off circuit must include the injector, ensure the power for the injector is via the PDB.

13.1 Remote Injector (rack mount)

A power cord is supplied with the injector.

110 VAC or 230 VAC are supplied from the main disconnect room device. The injector must be connected to this supply.

13.2 Pedestal Injector

A power cord is supplied with the injector.

In all cases (110 VAC or 230 VAC), it will be connected to a wall outlet near the operator location, fed by the main disconnect room device.

13.3 Injector L.F. ILLUMINA

As a result of power demand availability for all functions of this new injector, in any cases it will be connected to a wall outlet sized to 1500 W, 110 VAC or 230 VAC as nominal voltage. The wall outlet is fed by the main disconnect room device.

14 Advantage Windows

A power cord is supplied with Advantage Windows. It is connected to outlet fed by the main disconnect room device.

Verify that the ground between AW, AW spliter and monitors ground are equipotential (0.1 ohm equipotentiallity between room ground point (busbar) and wall outlets).

NOTICE

To power the AW splitter, use the appropiate cable out of lot P/N 2385173.

15 MAC-LAB System EX

For location of MAC–LAB Acquisition Unit Floor mount kit 408431–001, refer to *Electrical Ducts* in Cable Channeling.

For MAC–LAB System EX, refer to:

- Marquette document P/N 2000465–001 Preinstallation Guide

16 MIS (Master Interconnect System)

Innova system interconnect cables are described in MIS (Master Interconnect System) documents. These documents specify all interconnections between components within the system.

Reference: For specific Vascular system interconnect maps and connection details, refer to the following

- Innova 2121-IQ/3131-IQ Biplane Cardiovascular Imaging System Mismaps
- Innova 2121-IQ/3131-IQ Biplane Cardiovascular Imaging System Mis Charts

General Guidelines

Innova System introduces a new system interconnect with a star distribution for all cables from the technical area. Cable group 1 for Exam room and cable group 2 for control room. The cable group shall be put in place during the same action. The cables are routed in the same duct.

The HV cables could be pulled separately.

17 Cable Channeling

17.1 General

High voltage and power cables must be separated from other cables. Use a separate trough in the duct system, or use a separate conduit. Minimize cable length between the line disconnect and the System Cabinet power unit to reduce voltage regulation problems and wiring costs.

For information about the cables supplied with your system, please refer to Physical Runs.

Raceways or cables trays containing electric conductors shall not contain any pipe, tube or equal for steam, water, air, gas, drainage or any service other than electrical

17.2 Conduit

Separate conduits must be used for power and signal wires. These wires must be kept separated from each other.

Using conduit imposes some important considerations when used with this system. Of primary concern, the majority of cables used are pre–terminated. Pre–termination greatly simplifies interconnection but makes cable–pulling difficult because of the added dimensions of the connectors.

Conduit must be large enough to pass the cable and connector through with all other cables already in the conduit. Also, the size of conduit chosen must allow for future growth. There is the possibility of additional cables being added later as the system is developed and options are added.

The use of conduit is recommended for cables running overhead between rooms, especially when a diagonal run provides the shortest cable path

17.3 Electrical Ducts

It's important that electrical ducts have separate compartments for power and signal wires. These wires must be kept separated from each other for proper system operation.

Electrical ducts have advantages, when used with a single room or two adjacent rooms. Electrical ducts combine cabling in a neat and functional appearance, with accessibility and room for expansion.

NOTE: Medrad AVANTA, IVUS and Mac-lab cables exit behind the table in the patient room.

It is the responsibility of the site planner to provide the appropriate solution to the table exit (e.g gas box, Clab II, Tram module, connection interface box)

NOTE: MEDRAD Avanta Table mount: A 76.2 mm (3 in) and max 25 m (984 in) length conduit between technical room and patient room shall be prepared below the floor for the three injector cables. It is recommended to use the MEDRAD Avanta floor mounting bracket to cover the duct hole in the patient room if there is no gases box.

Floor mount installation can be accomplished one of two ways:

- Connectors mounted in trough under mounting bracket (Figure 1)
- Connectors mounted above mounting bracket (Figure 2)

Illustration 6-17: MEDRAD Avanta floor mounting methods

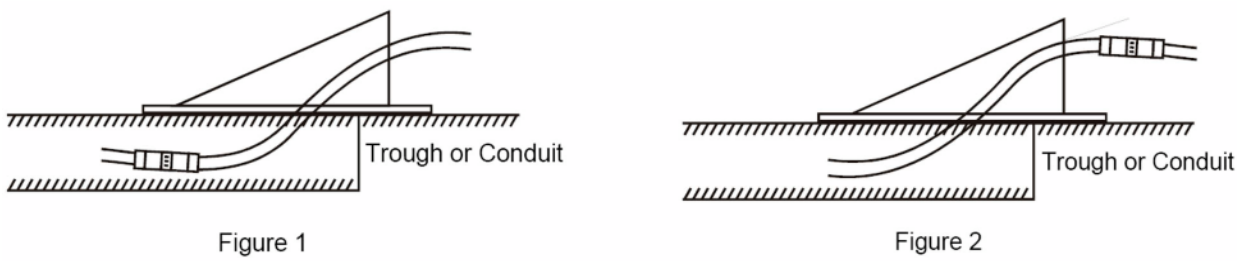

Figure 1 Figure 2

For further MEDRAD Avanta floor mounting, see the Installation guide *MEDRAD Avanta Floor Mounting Bracket.*

Illustration 6-18: Floor ducts and outlets

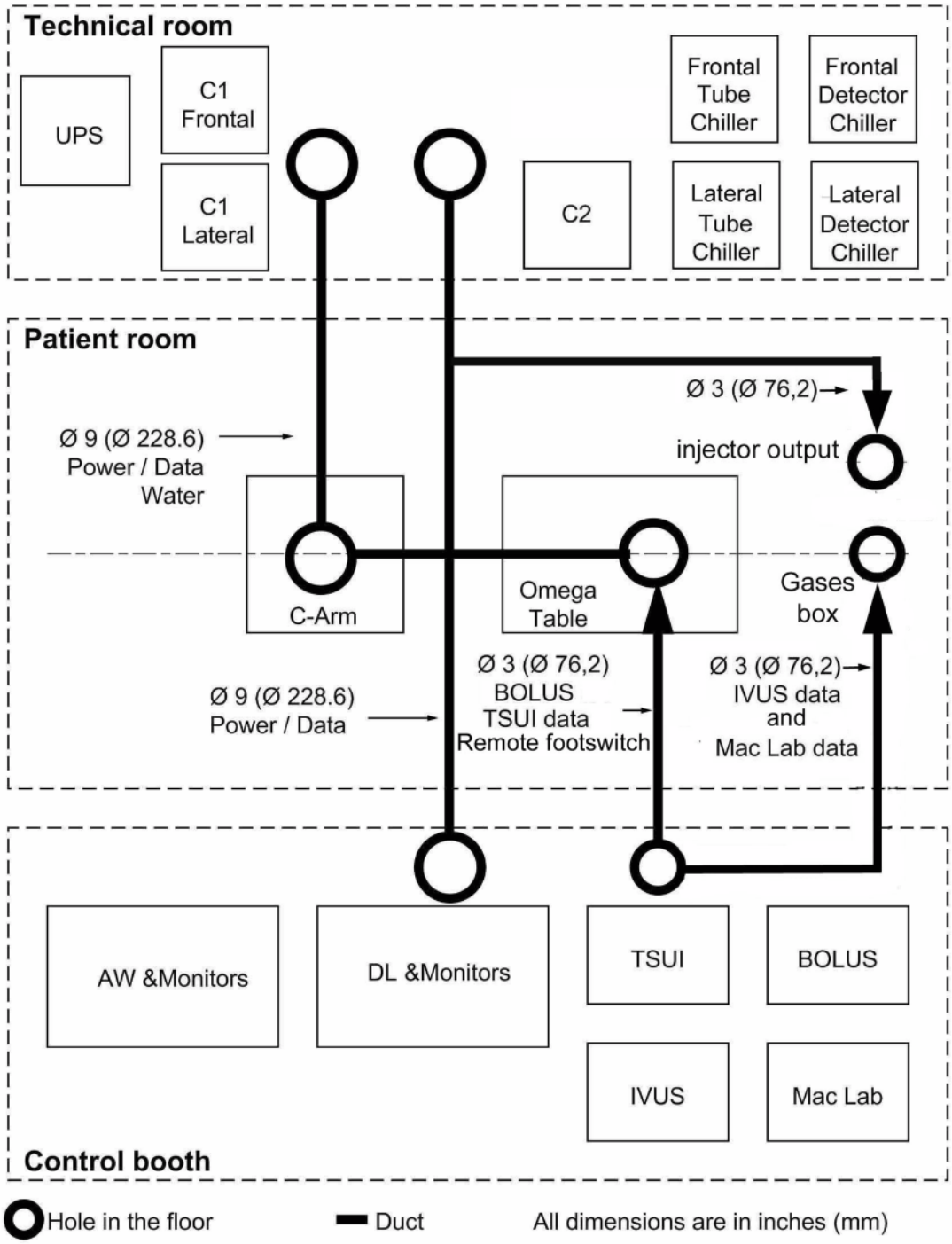

18 Physical Runs

NOTICE

All lengths of cable are:

- in useable meter when you look at group level, or
- in meters (connector to connector) when you look at the cable level.

Suspension are always pre–cabled with 36 meter cables of connector to connector Monitor options includes their 24 meters length for cabling

In case 24 m required, they have to be added in the order and replaced on site.

For a description of how to use the following 5 cable group schematics, see below:

Illustration 6-19: Description of cable group diagrams

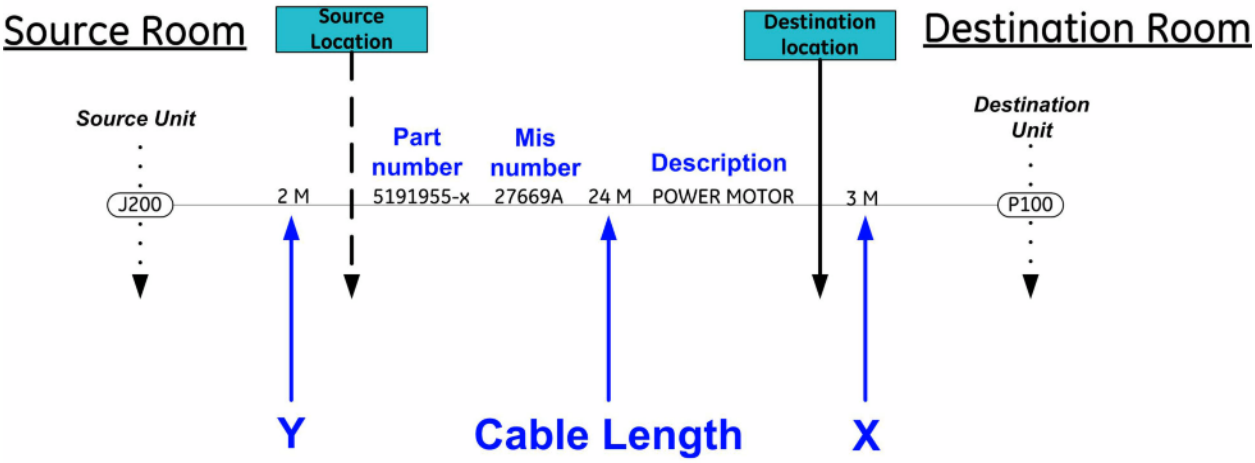

Cable length data is as follows:

- Cable Length = the total cable length, connector to connector (example above is 24 meters).
- X + Y = used length for connection within system (example above is 5 meters).
- Cable Length - (X + Y) = available length for conduit run (example above is 19 meters).

Illustration 6-20: CABLE GROUP 1 – FROM TECHNICAL AREA TO EXAM ROOM

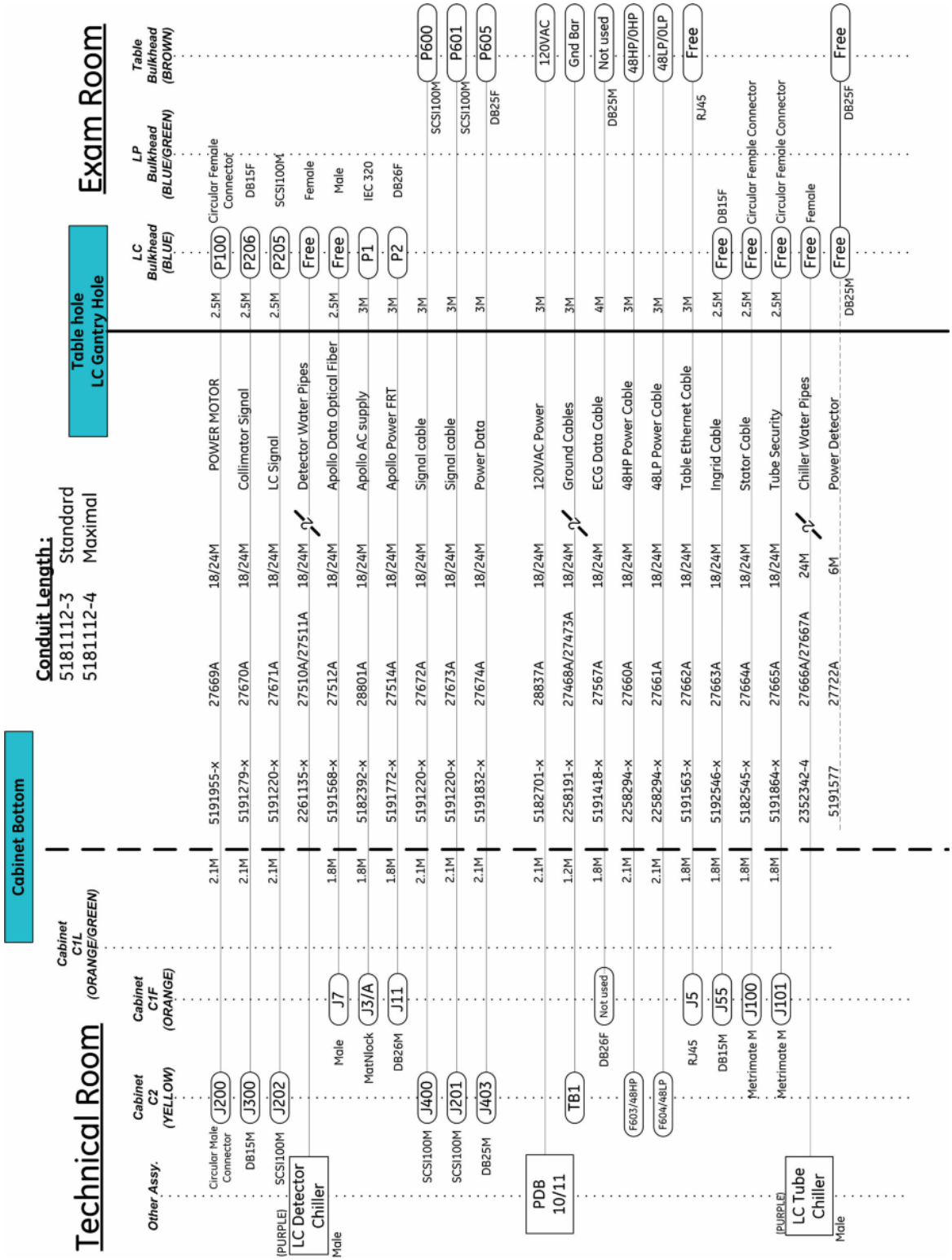

Illustration 6-21: CABLE GROUP 2– FROM TECHNICAL AREA TO CONTROL ROOM

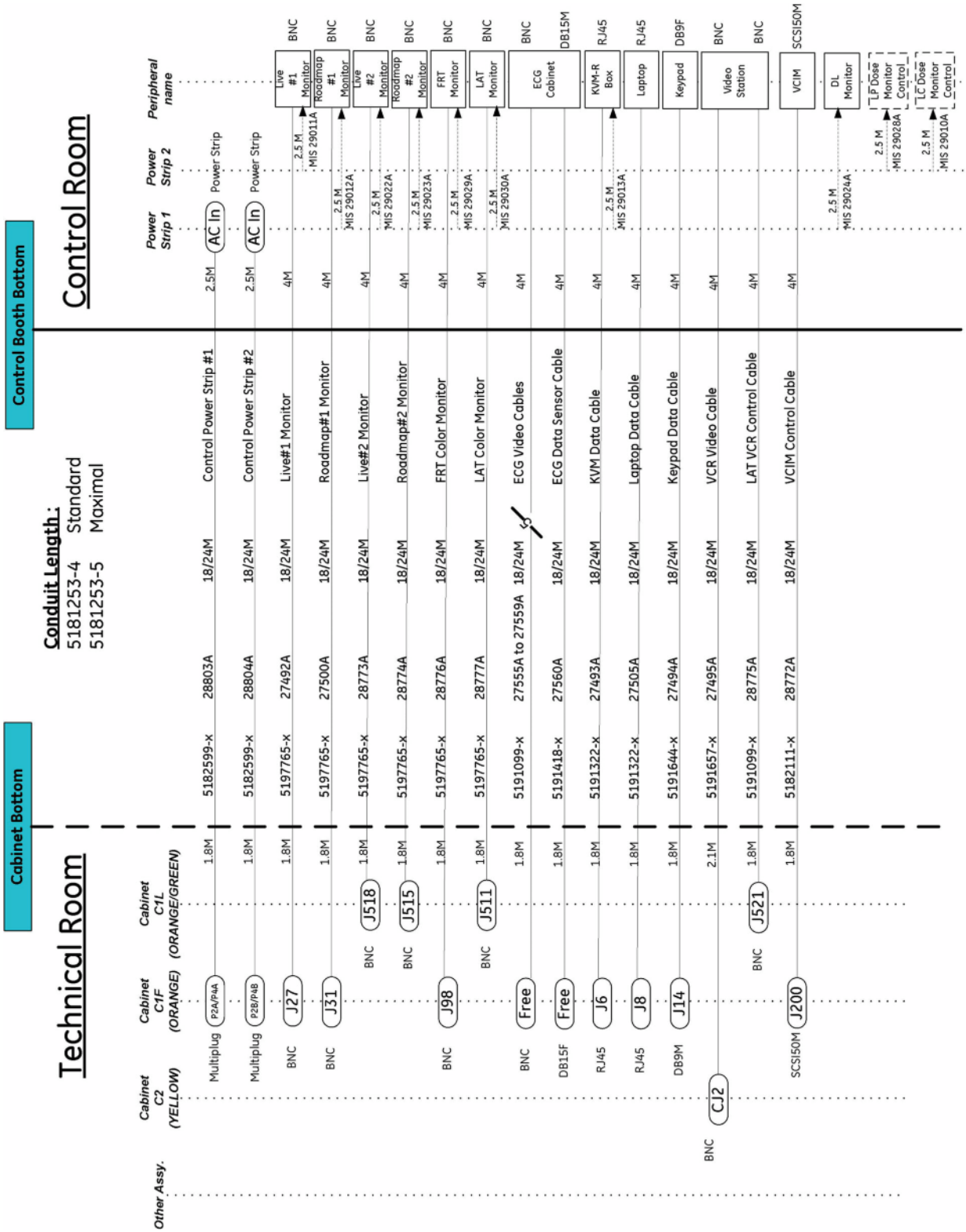

Illustration 6-22: CABLE GROUP 3 - FROM TECHNICAL AREA TO TECHNICAL AREA

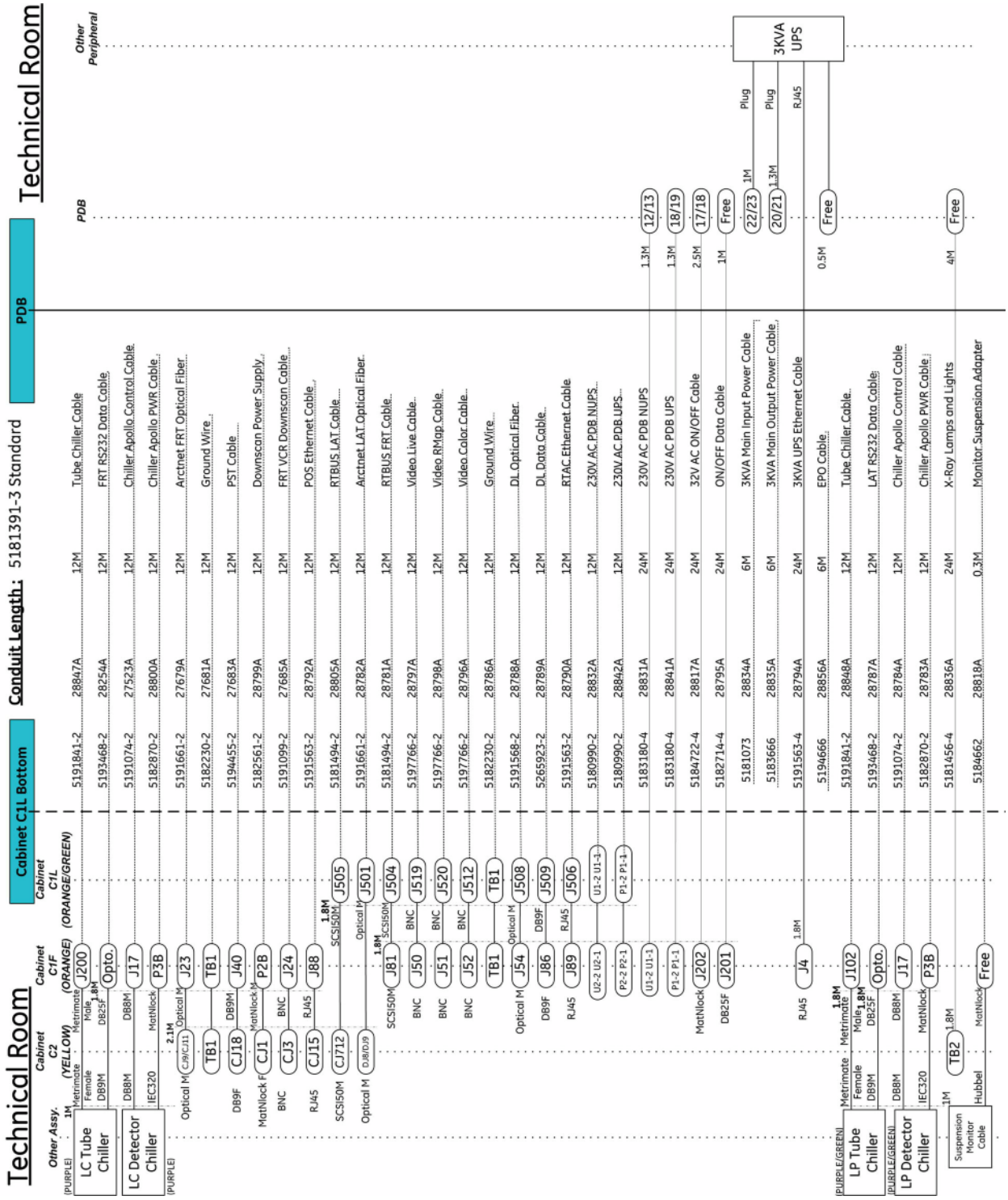

Illustration 6-23: CABLE GROUP 4 - FROM TECHNICAL AREA TO EXAM AREA

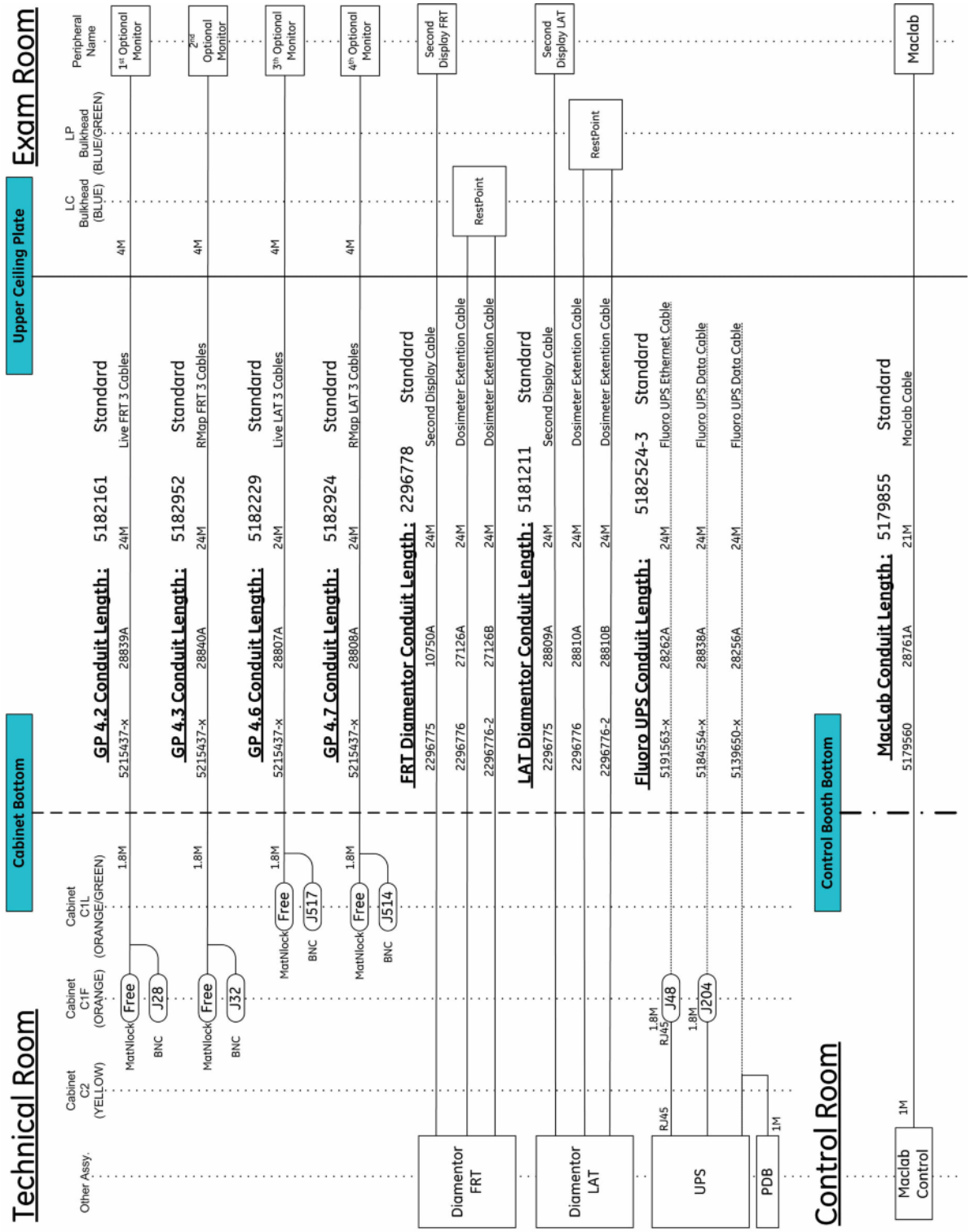

Illustration 6-24: CABLE GROUP 5 - FROM TECHNICAL AREA TO EXAM AREA

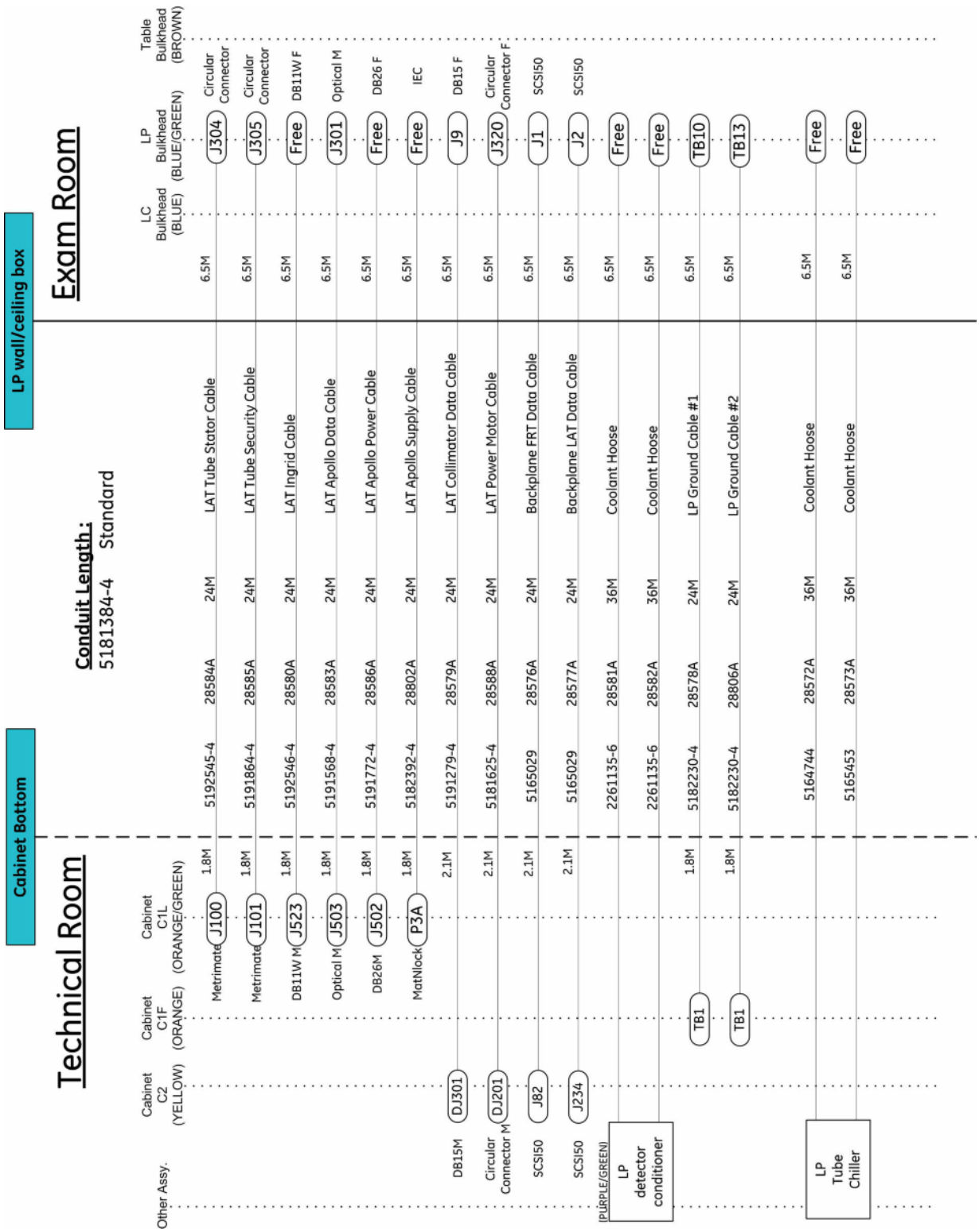

This page left intentionally blank.

Chapter 7 Additional Planning Aids

1 Shipping Information

1.1 Product Shipping Information

Refer to Table 7-1. To obtain shipping information for components not specified in Table 7-1, refer to the appropriate component Pre-Installation Manual listed in Chapter 2, System Compatibility.

Table 7-1:

PRODUCT OR COMPONENT	DIMENSIONS MILLIMETERS (INCHES)			WEIGHT POUNDS (KILOGRAMS)	METHOD OF SHIPMENT
	Height	Length	Depth		
Innova LC Positioner	1950 (77)	2790 (110)	1160 (45.5)	2,340 (1060)	Shipping Dolly. See Illustration 7-1
	2300 (90.5)	2900 (114)	1380 (54.5)	2,645 (1200)	Air shipment. See Illustration 7-2
Innova LP4 Positioner (on longer dolly)	2135 (84)	2954 (116.3)	1590 (62.5)	2700 (1225)	Shipping Dolly. See Illustration 7-3
Innova LP4 Positioner (on shorter dolly)	2135 (84)	2790 (109.8)	1590 (62.5)	2700 (1225)	Shipping Dolly. See Illustration 7-4
C1 Frontal Cabinet	1800 (70.8)	900 (35.4)	650 (25.6)	1146 (520)	On pallet. See Illustration 7-6
C1 lateral Cabinet	1800 (70.8)	900 (35.4)	650 (25.6)	1003 (455)	
C2 Cabinet	1800 (70.8)	900 (35.4)	650 (25.6)	904 (410)	
Omega Table Base Assembly	1240 (49)	960 (38)	2140 (84.2)	1,290 (585)	On pallet See Illustration 7-7
Omega Table Top Assembly	220 (9)	3470 (137)	840 (33)	155 (70)	On pallet See Illustration 7-7
Power Distribution Box (PDB) CE	2040 (80.3)	940 (37)	720 (28.3)	525 (238)	See Illustration 7-8
Power Distribution Box (PDB) UL	762 (30)	2438 (96)	1067 (42)	1206 (548)	See Illustration 7-9
DL User parts	1040 (41)	860 (33.9)	680 (26.8)	220 (100)	On pallet
Videostation VCR	290 (11.5)	540 (21.3)	410 (16.2)	210 (95)	On pallet
X-Ray tube housing	960 (37.7)	770 (30.3)	710 (28)	250 (113)	On pallet
Chiller	1350 (53)	870 (34.8)	1040 (41)	670 (304)	On pallet
Cables					On pallet
Monitor susp. bridge	640 (25.2)	980 (38.6)	3060 (120.5)	445 (210)	On pallet
Monitor susp. rails	380 (15)	300 (12)	5960 (235)	355 (160)	On pallet
UL Fluoro UPS cabinet (*)	2100 (82.7)	890 (35)	1000 (39.4)	1235 (561)	On pallet
CE Fluoro UPS cabinet (*)	1750 (68.9)	890 (35)	1000 (39.4)	1287 (585)	On pallet
Cabinets 3kVA UPS	570 (22.4)	320 (12.6)	485 (19.1)	(82.7) 37.5	

(*) Estimated values

1.2 Detail of Innova Shipping Information

1.2.1 Innova LC Positioner Gantry On Shipping Dolly

Illustration 7-1:

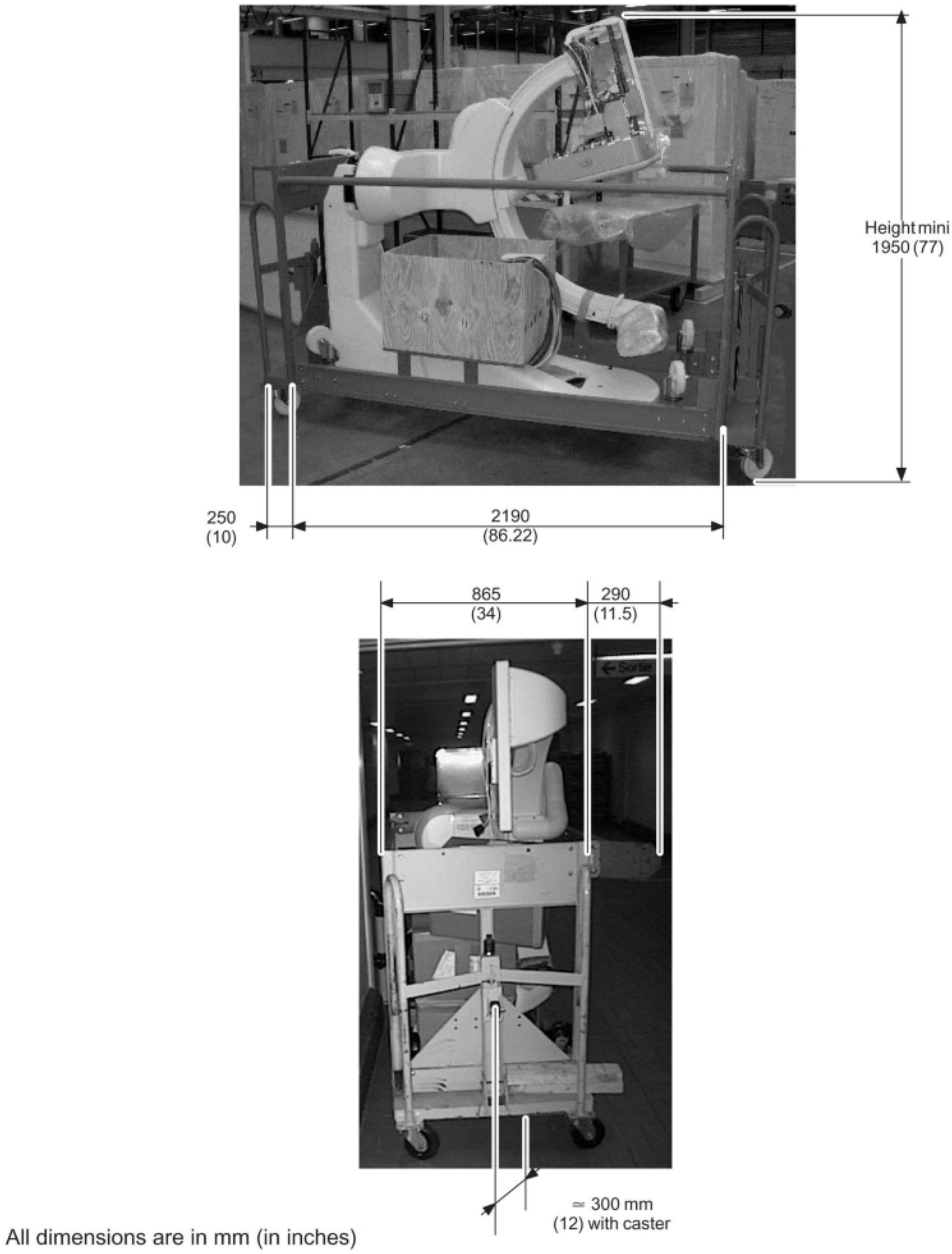

1.2.2 Innova LC Positioner Air Shipment

Illustration 7-2:

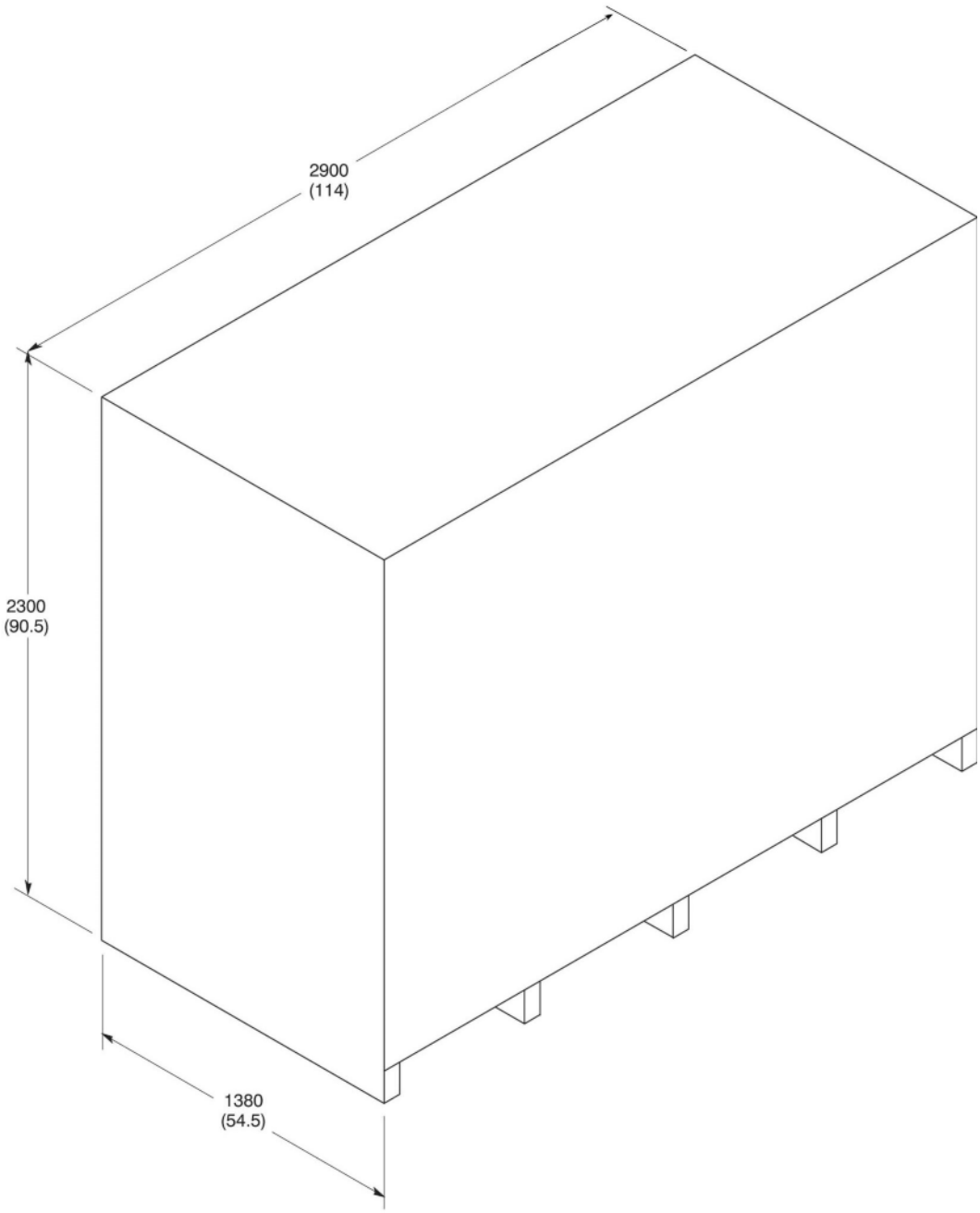

DIMENSIONS IN MM (INCHES)

NOT TO SCALE

1.2.3 Innova LP4 Positioner Gantry On Shipping Dolly (Longer and shorter dollies)

Illustration 7-3: On Longer type dolly

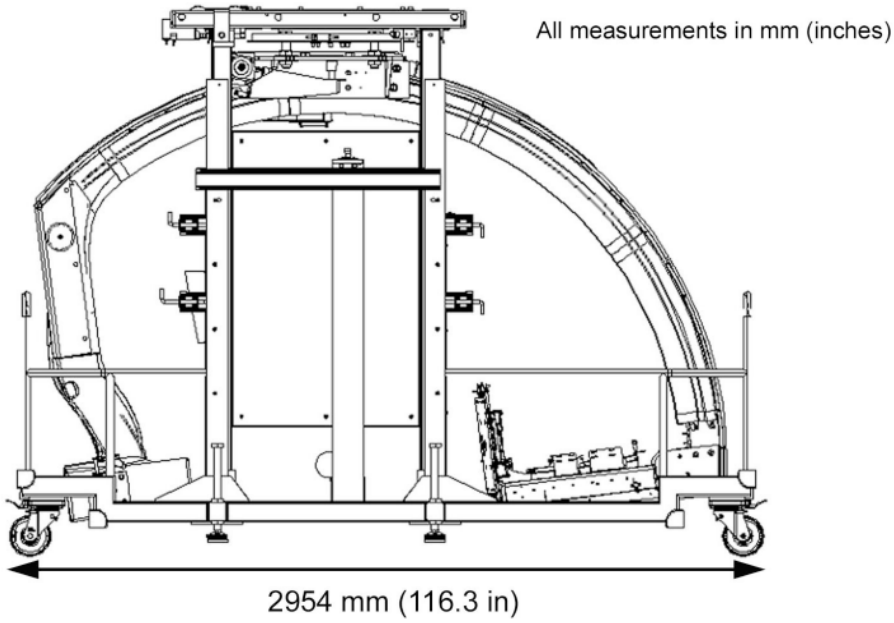

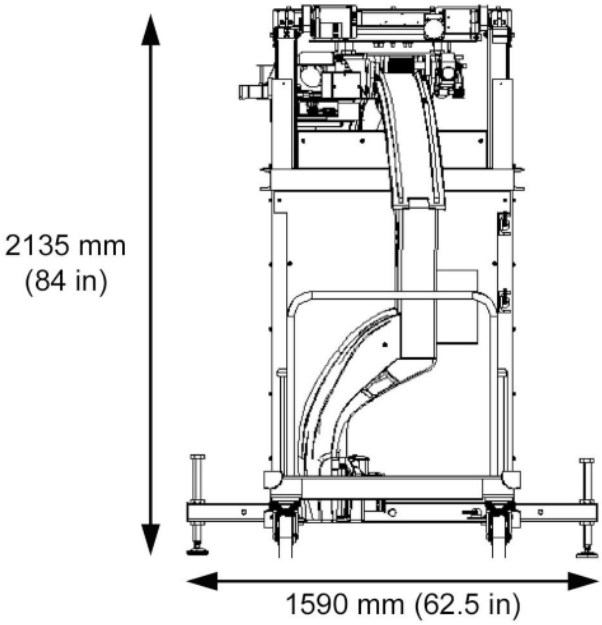

LP4 weight : 670kg (1477 ibs)
Dolly weight : 555 kg (1223 lbs)

NOTE: The dimensions above are for shipping. When the LP4 and dolly are in rolling configuration for hospital access, the dimensions are Height : 2001 mm (78.8 in) and width : 1040 mm (41 in)

Illustration 7-4: On shorter type dolly

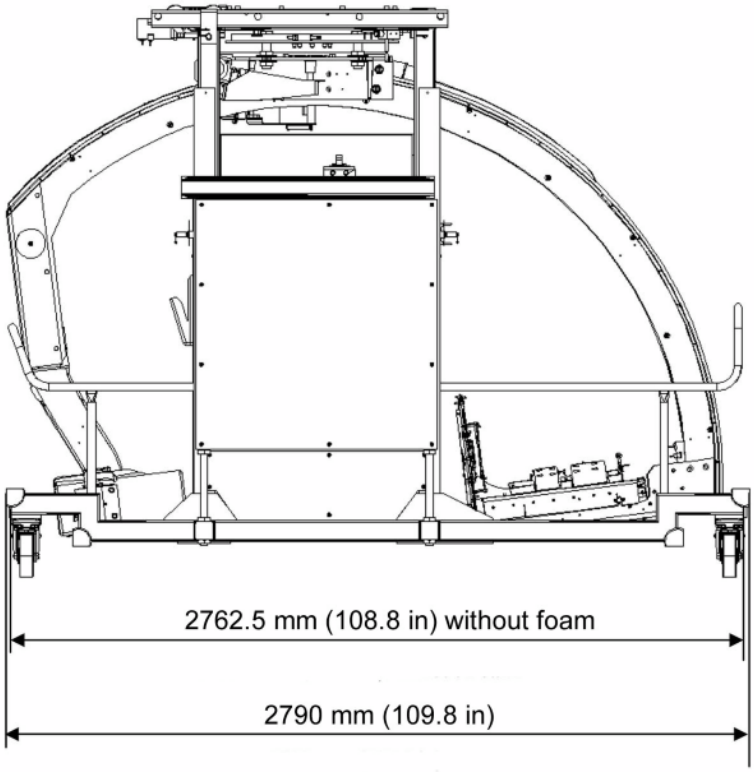

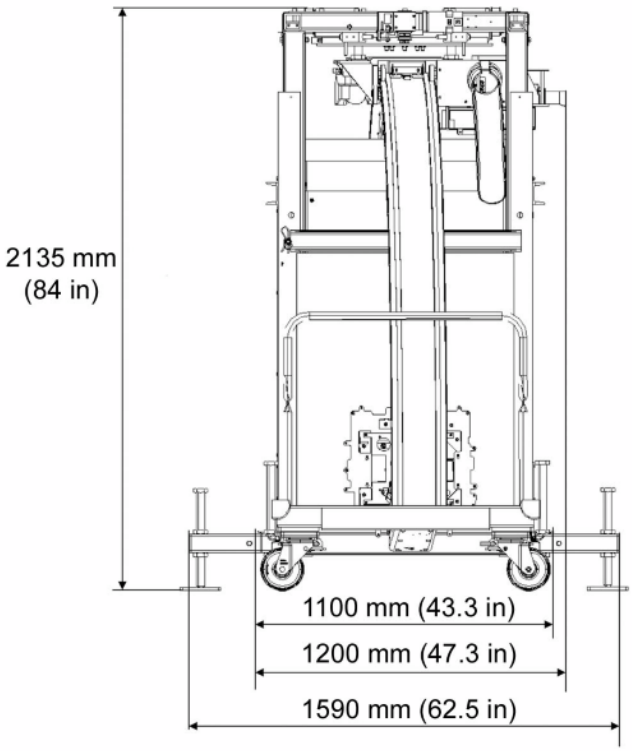

1.2.4 Innova LP4 Positioner Stationary Rails Packaging

Illustration 7-5:

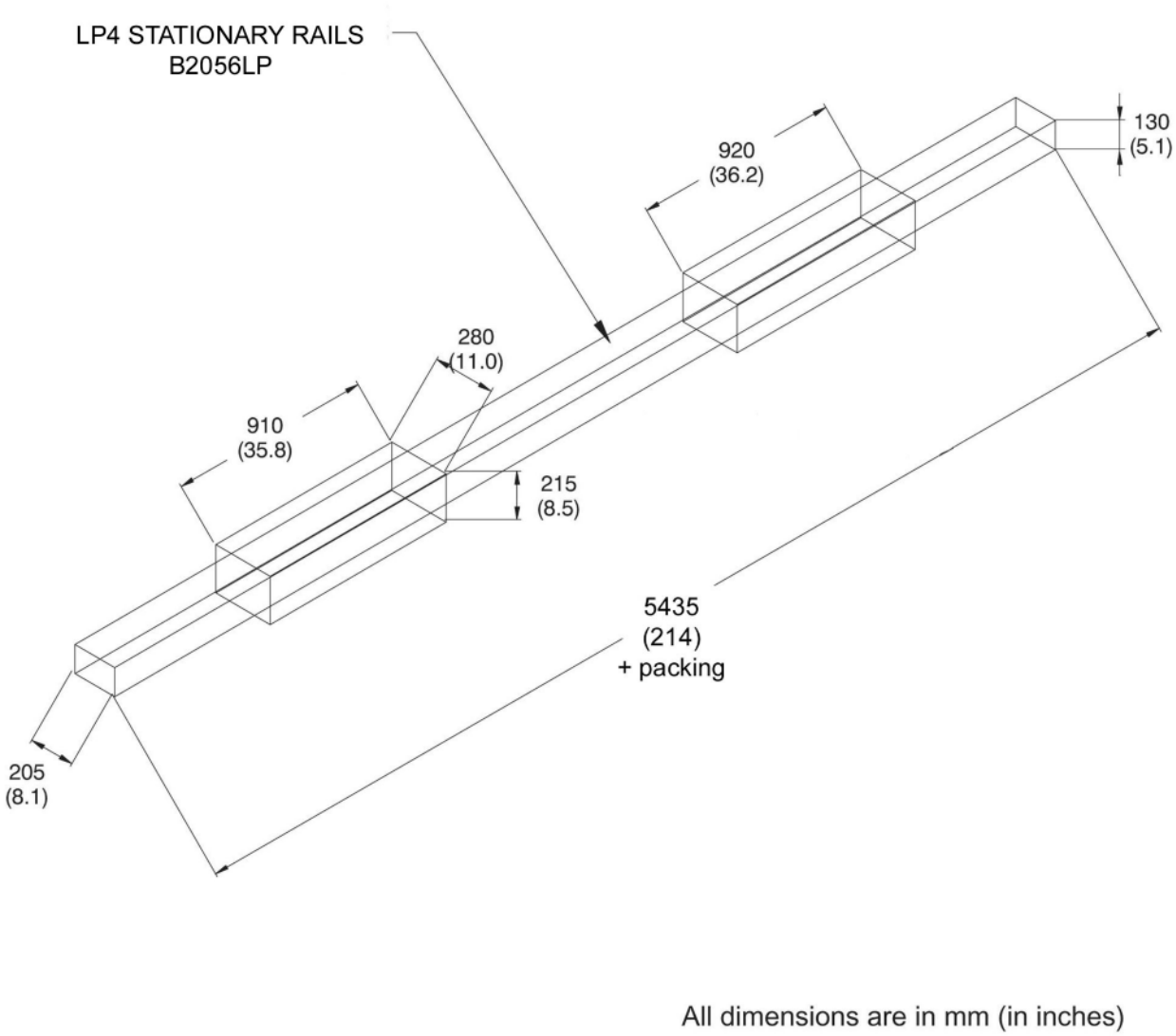

1.2.5 Innova C1 Frontal, C1 Lateral, and C2 LC/LP Cabinets

Illustration 7-6: C1 and C2 Cabinets on pallets

ALL DIMENSIONS ARE IN MM (INCHES)

The shipping weight is of about 36.7 kg (81 lbs) per dolly.

NOTE: Please use appropriate transportation and lifting means when handling the system cabinets. Professional handling is required.

1.2.6 Omega Shipment

Illustration 7-7:

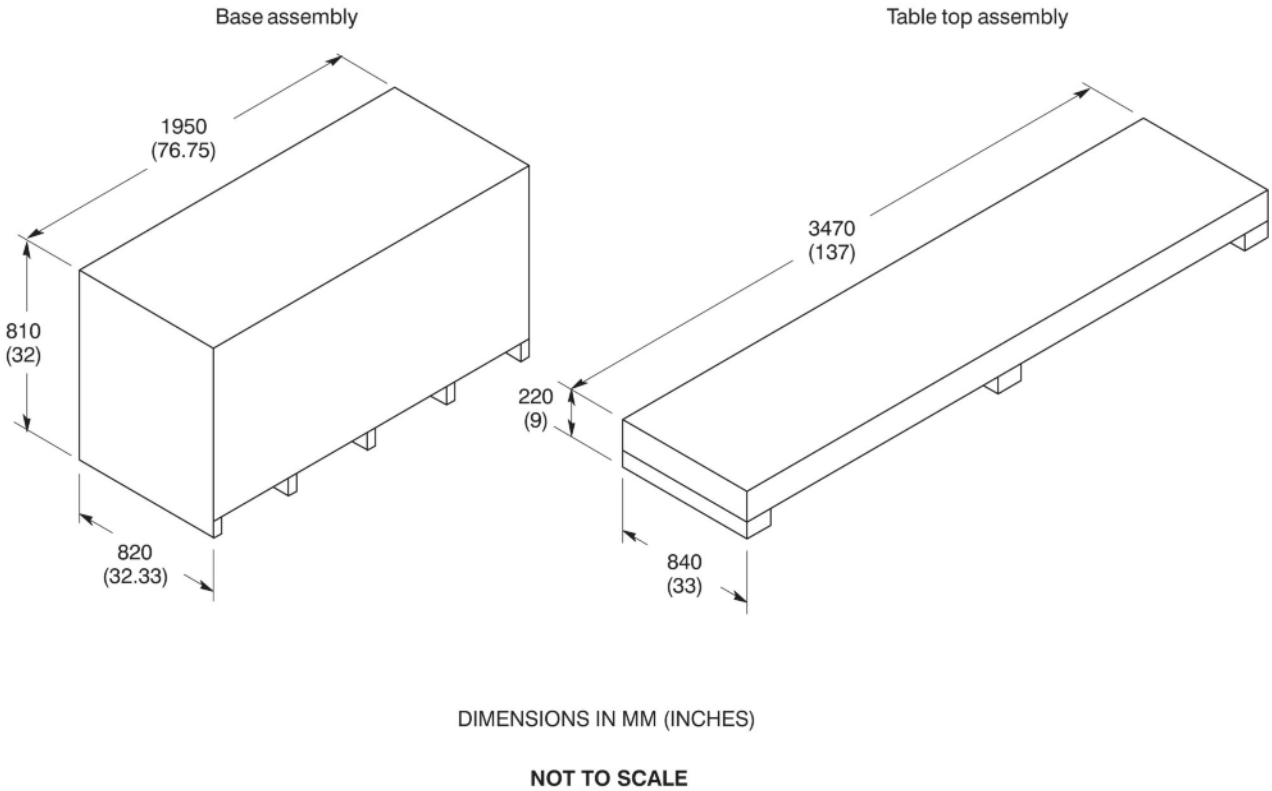

1.2.7 Power Distribution Box (PDB) CE

Illustration 7-8:

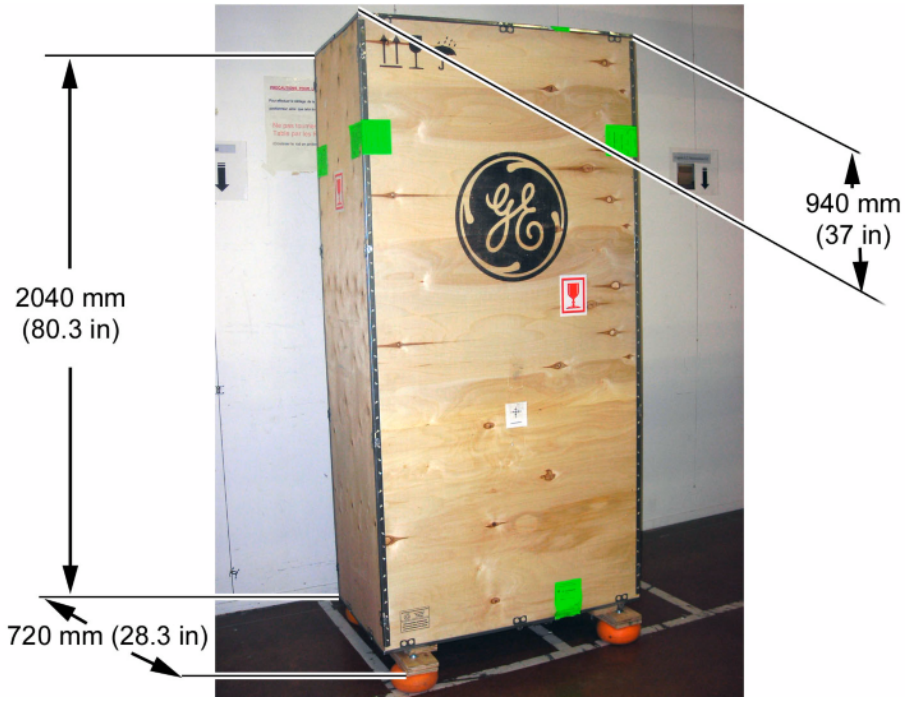

1.2.8 Power Distribution Box (PDB) UL

Illustration 7-9:

1.2.9 Other Elements Package

NOTE: All OEM parts are shipped inside there original boxes group as needed on pallets.

Illustration 7-10:

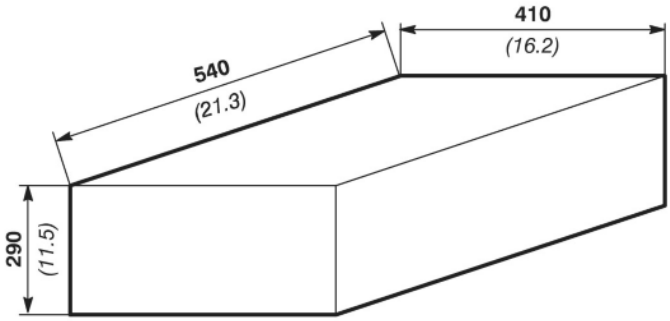

2 Tools and Test Equipment

Refer to Table 7-2. To obtain a list of tools and test equipment for components not specified in Table 7-2, refer to the appropriate component Pre-Installation Manual listed in Chapter 2, System Compatibility.

Table 7-2:

PRODUCT OR COMPONENT	TOOL OR TEST EQUIPMENT	USED FOR	SOURCE	RECEIVED (DATE)
Innova LC Positioner	Service Engineer's Tool Case	General Use		☐
	Level, Protractor Type	Positioner Checks		☐
	Plumb Line included in 46-216640G1	Positioner Checks		☐
	Torque Wrench 2 to 20 daN.m (15 ft. lbs. to 150 ft. lbs.)	Positioner Checks		☐
	1/2 inch Ratchet Wrench (2)	Raise and Lower Positioner shipping dolly		☐
	Wrench, Spanner (46-176584P1)	High Voltage Cable Installation		☐
	Laptop Computer (MS-DOS Windows)	Positioner Configura-tion and Calibration		☐
Innova LP4 Positioner	Ladders	Installation		☐
	LP4 Toolcase (shipped with LP4)	Installation		☐
	5-axis Laser Alignment tool (shipped with PIM kit)	Installation		☐
Status Display	Same as for Innova LC (Service Engineer's Tool Case)			
Omega Table	Same as for Innova LC (Service Engineer's Tool Case)			
				☐
				☐
				☐
C2 LC/LP cabinet	Same as for Innova LC (Service Engineer's Tool Case)			
				☐
				☐
X-Ray Head	Same as for Innova LC (Service Engineer's Tool Case)			
				☐
				☐
C1 Cabinet	Same as for Innova LC (Service Engineer's Tool Case)			
				☐
				☐
	Same as for Innova LC (Service Engineer's Tool Case)			

PRODUCT OR COMPONENT	TOOL OR TEST EQUIPMENT	USED FOR	SOURCE	RECEIVED (DATE)
	Ethernet adaptation kit for laptop 2128794	General use (to be ordered before delivery of system)		☐
				☐
DL User parts				
				☐
				☐
Monitor Suspension	Ladders	Installation		☐
	XT Lifting Tool (x2) 46-156940G2	Installation		☐
Chiller	Phillips/Flathead screwdriver. Open chiller. Install wiring and hoses.			
				☐
				☐

3 Route Survey

3.1 Step One — Sketch

Start preparing Route Survey by sketching a floor plan of the hospital or clinic which will receive the equipment. Include all areas on the delivery route from outside the building to destination. See Illustration 7-11.

Reference Numbers: Numbers in circles refer to Route Survey data. The Route Survey is a form on which site data are listed (see Section 3.2).

Illustration 7-11:

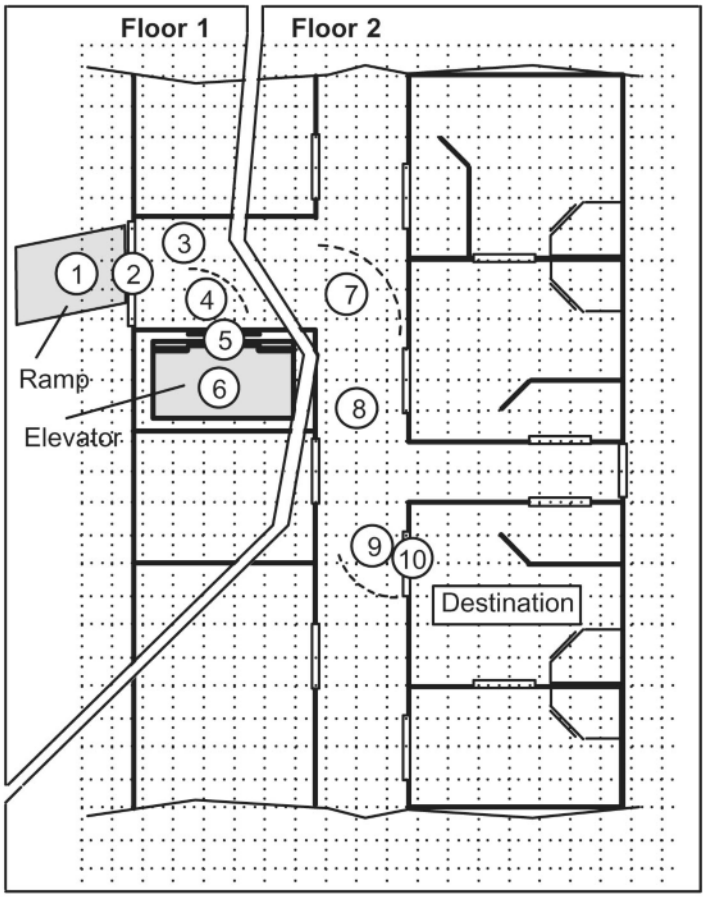

3.2 Step Two — Survey

Data concerning the intended delivery route are recorded on the Route Survey in the following pages. Record all loading capacities, corridor widths, door openings, turning radii, flooring materials, elevator sizes, obstructions and so on.

3.3 Step Three — Check

Verify equipment can be transported via the route specified in Section 3.1. Compare Route Survey compiled in Section 3.2 to equipment specifications in this and other applicable pre–installation directions.

Table 7-3:

Route Survey		
Ref. no.	Area: loading dock, doorway, hallway, turn, elevator, obstruction, etc.	Limitations: loading capacity, height, width, depth flooring material, radius, etc.

4 European Process Order Select

Several components like cables, stationary rails, etc. are length selectable. This selection should reflect the particularities encountered by an Installation Specialist on Site.

All cable and component selections must be sent at least 6 weeks before RSDD to your PMC. The selection tool is available on the website: http://gein.euro.med.ge.com/european_installations/

5 Pre-Installation Checklist

GE Healthcare Site Readiness Checklist	
GEHC Global Order # :	Customer:
GEHC On-site Representative :	MI Supplier:
Name of customer reviewed with :	Lead Installer:
GEHC PMI :	Phone Number:
Target Site Prep Completion Date:	Helper:
The customer is responsible for proper site preparation and site readiness regardless of any GEHC inspections/assessments.	
For MR Magnet Delivery: Ensure cryogen vents, power for the cooling system and exhaust fan system are installed and operational (0.7T, 1.5T & 3T) and chilled water supply is available 24x7 that meets system cooling equipment requirements.	
Inspection Date:	

Item #	GEHC Minimum Requirements	**Storage**: Is item ready?	**Predict (Pre-ship)**		**Verify (Delivery)**: Is item ready?	**Validate (Mech Install)**: Is item ready?	**Comments** If "N", please enter in comments or action plan
			Is this item ready?	Will item be ready?			
1	Equipment installation drawings must match actual room size and must meet clearance requirements. Deviations that meet installation requirements may be red-lined, if red-lining is allowed by local code. Seismic requirements are identified on construction drawings.	X					
2	Delivery route to installation or storage area meets requirements and has been discussed and scheduled with the customer. Ensure floor protection is discussed, requirements identified, and will be available at time of delivery and installation.					X	
3	Rooms that will contain equipment, including storage areas, are dust free. Room security to prevent unauthorized access and theft has been discussed with customer. The customer is aware of these security issues, implications and responsibility.						
4	In room HVAC ductwork and units (in room) must be mechanically installed and dust free. Installation rooms appear to meet environmental conditions (see Further Definitions) and observed issues have been communicated to the customer. If being stored, storage area must meet PIM storage criteria.						
5	Ceiling grid is installed, Unistrut is located per the installation drawings, and permanent lighting is installed and operational.	X					
6	Floor is clean and prepared for final floor covering. Customer has verified floor leveling meets the equipment installation drawings and PIM specs and no visible defects are observed. Gantry and table baseplate are installed prior to delivery (if applicable)	X					

7	Access to a working phone at the facility for emergency use, including MR magnet delivery.	X					
8	All walls primed (final coat not needed on Day 1), and counter tops that will support equipment must be installed. No dust-producing cabinetry work in installation areas.	X					
9	Mechanical supplier has been provided with a set of equipment installation drawings for reference. For California, permitted construction drawings or PMI-specified installation drawings are required.	X	X	X	X		
10	Conduit/electrical cable ducting/dividers/ access flooring installed, with the exception of surface-mounted floor ducting. Wiring to the main disconnect panel is installed and compliant with equipment installation drawings or pre-installation manual.	X	X	X	X		
Issued Date: 7/9/07 Rev 11		GEHC Only: COE # (888) 799.7266 Option 5 (PMI Support)					

This page left intentionally blank.

Chapter 8 IP Addressing Process

1 IP Addressing Process

To obtain an IP address, contact the following for your pole:

- GEMSAM:
  Contact: OnLine Center–Americas, Network Products and Services (NP&S)
  Telephone: 1–800–321–7937

  NOTE: Press [1] for the Online Center. Follow the phone tree instructions to select X–Ray modality. When prompted, select the option for obtaining an IP address.
- GEMSE:
  Use the new mail form called *INSFORM.xls* or *INSFORM.txt* for obtaining an IP Address.
  If you have questions or need clarification regarding the use of this form, do not hesitate to ask the Operation support OnLine.
  Contact: OnLine Center–Europe
  Telephone: +33 (0)1 30 83 13 00
  FAX: +33 (0)1 30 70 99 70

  NOTE: The INSITE FORM is on the formatted sheet (.xls) or text sheet (.txt) that can be found on the Sevice CD–Rom.
- GEMSA:
  Contact: OnLine Center–Asia
  Network Products and Services (NP&S)
  Telephone: (81) 426 56 0033
  FAX: (81) 426 56 0053

This page left intentionally blank.

Chapter 9 Seismic Calculations

1 Overview

Seismic requirements are determined and specified by the hospital architect of record and may require approval by the specific state or country agency.

Seismic attachment hardware shown on seismic calculations may differ from harware supplied with system. Any additional hardware that is required will be the responsibility of the institution and/or their contractor. Contact your Installation Specialist with any related questions.

Seismic calculations included in this chapter are per California Building Code.

2 Calculations

Seismic calculations are included for the following:

- C1 Frontal Cabinet, Section 2.1
- C1 Lateral Cabinet, Section 2.2
- C2 LC/LP Cabinet, Section 2.3
- Coolix 4000 Chiller, Section 2.4
- Thermocon Detector Chiller, Section 2.5
- Fluoro UPS CE Cabinet, Section 2.6
- Fluoro UPS UL Cabinet, Section 2.7
- 3 kVA Cabinet UPS - model 9125, Section 2.8
- 3 kVA Cabinet UPS - model 9130, Section 2.9
- LC Positioner, Section 2.10
- LP4 Positioner, Section 2.11
- Power Distribution Box (PDB - CE), Section 2.12
- Power Distribution Box (PDB - UL), Section 2.13
- Omega IV Table, Section 2.14
- Omega V Long Table with Baseplate, Section 2.15
- Omega V Long Table, Section 2.16
- Overhead Flat Panel Suspension – Ceiling mounted, Section 2.17
- 8 Monitor Flat panel Suspension – Ceiling mounted, Section 2.18

2.1 C1 Frontal Cabinet

Illustration 9-1: C1 frontal cabinet - Slab on grade / Upper floor

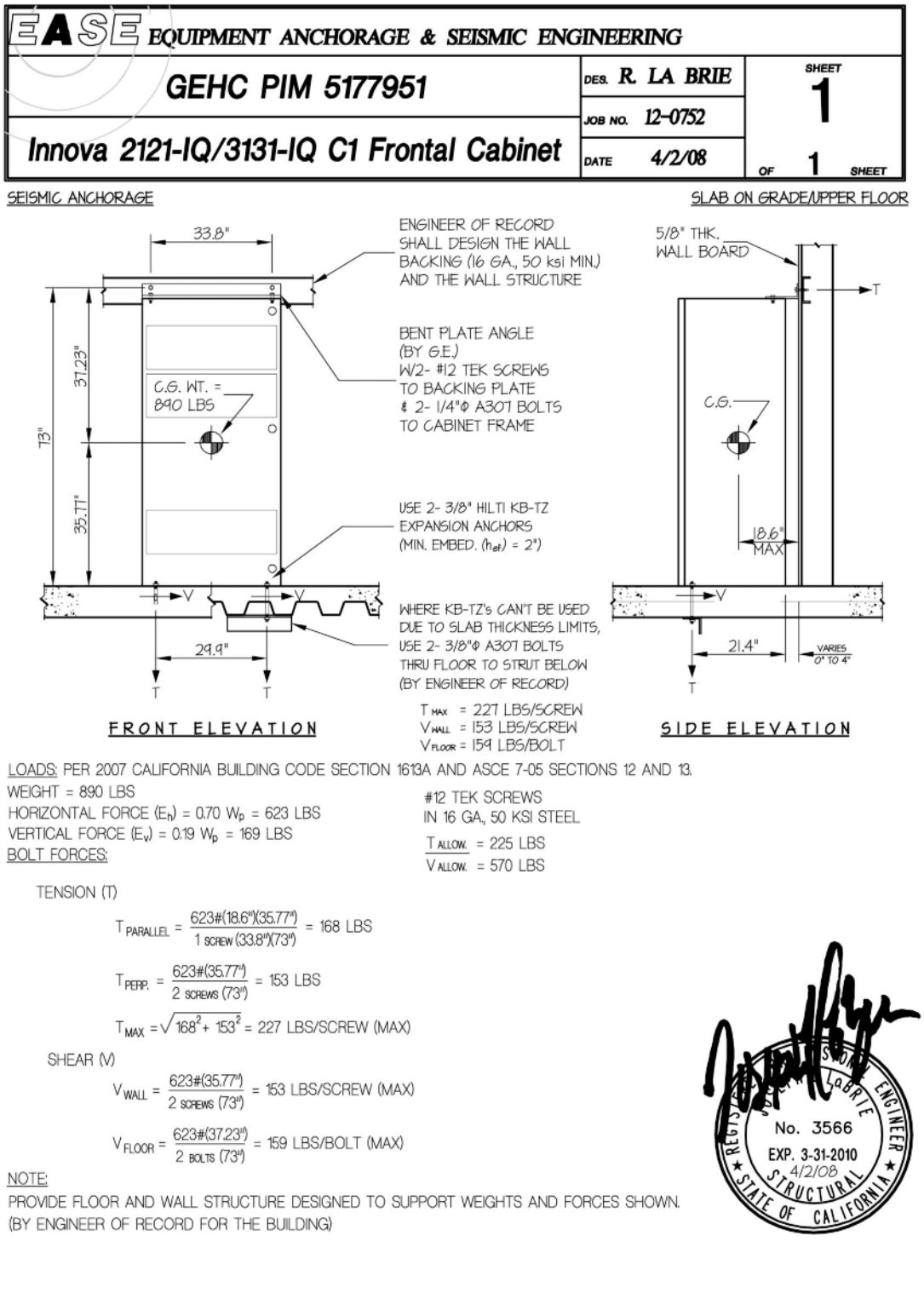

2.2 C1 Lateral Cabinet

Illustration 9-2: C1 Lateral cabinet - Slab on Grade / Upper Floor

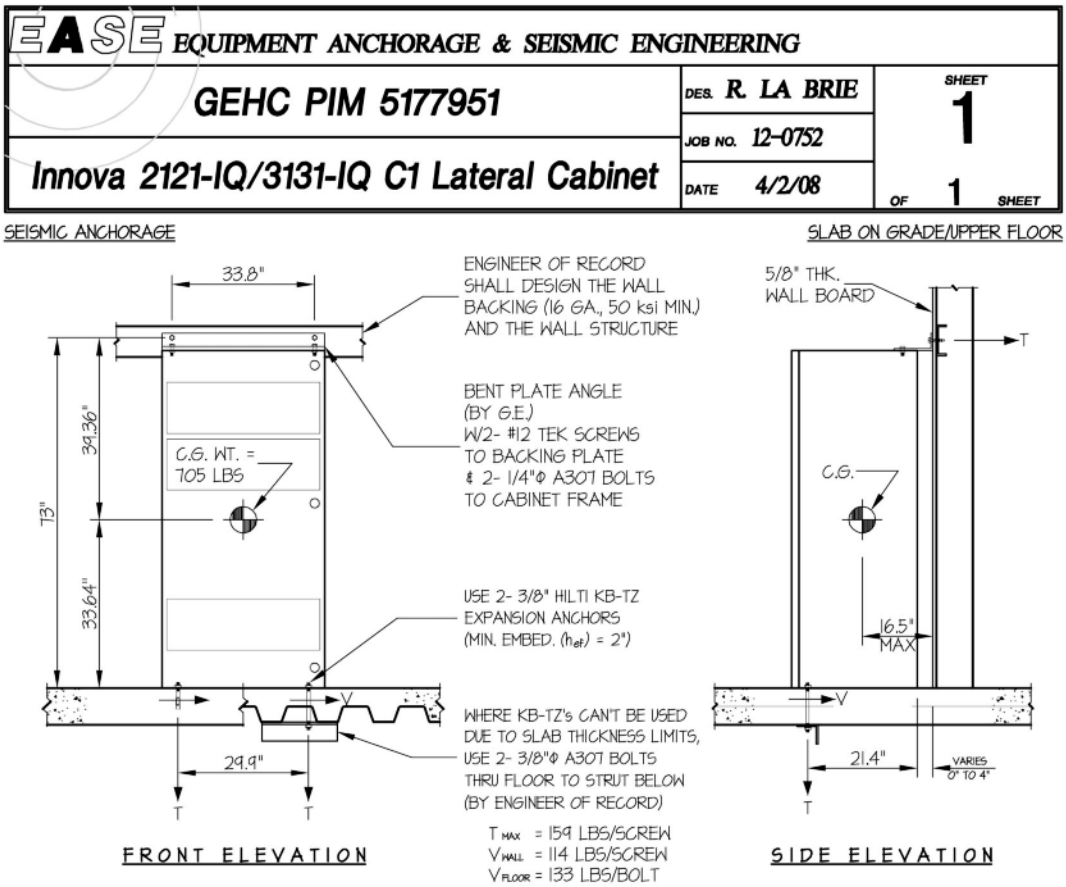

LOADS: PER 2007 CALIFORNIA BUILDING CODE SECTION 1613A AND ASCE 7-05 SECTIONS 12 AND 13.

WEIGHT = 705 LBS

HORIZONTAL FORCE (E_h) = 0.70 W_p = 494 LBS

VERTICAL FORCE (E_v) = 0.19 W_p = 134 LBS

#12 S.M. SCREWS IN 16 GA., 50 KSI STEEL

$T_{ALLOW.}$ = 225 LBS

$V_{ALLOW.}$ = 570 LBS

BOLT FORCES:

TENSION (T)

$$T_{PARALLEL} = \frac{494\#(16.5'')(33.64'')}{1\ \text{SCREW}\ (33.8'')(73'')} = 111\ \text{LBS}$$

$$T_{PERP.} = \frac{494\#(33.64'')}{2\ \text{SCREWS}\ (73'')} = 114\ \text{LBS}$$

$$T_{MAX} = \sqrt{111^2 + 114^2} = 159\ \text{LBS/SCREW (MAX)}$$

SHEAR (V)

$$V_{WALL} = \frac{494\#(33.64'')}{2\ \text{SCREWS}\ (73'')} = 114\ \text{LBS/SCREW (MAX)}$$

$$V_{FLOOR} = \frac{494\#(39.36'')}{2\ \text{BOLTS}\ (73'')} = 133\ \text{LBS/BOLT (MAX)}$$

NOTE:

PROVIDE FLOOR AND WALL STRUCTURE DESIGNED TO SUPPORT WEIGHTS AND FORCES SHOWN. (BY ENGINEER OF RECORD FOR THE BUILDING)

2.3 C2 LC/LP Cabinet

Illustration 9-3: C2 LP/LC cabinet - Slab on floor / Upper floor

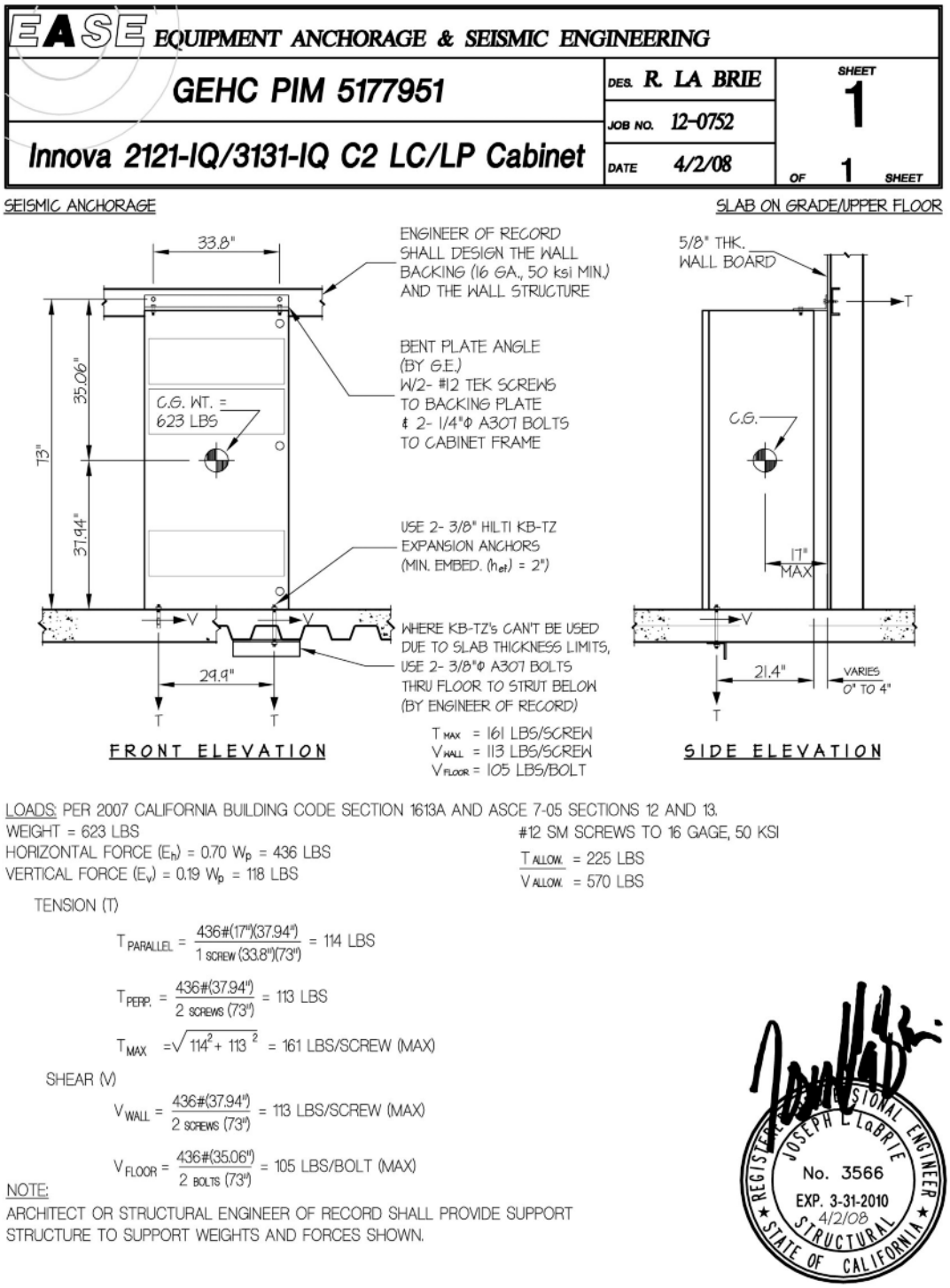

LOADS: PER 2007 CALIFORNIA BUILDING CODE SECTION 1613A AND ASCE 7-05 SECTIONS 12 AND 13.

WEIGHT = 623 LBS

HORIZONTAL FORCE (E_h) = 0.70 W_p = 436 LBS

VERTICAL FORCE (E_v) = 0.19 W_p = 118 LBS

#12 SM SCREWS TO 16 GAGE, 50 KSI

$T_{ALLOW.}$ = 225 LBS

$V_{ALLOW.}$ = 570 LBS

TENSION (T)

$$T_{PARALLEL} = \frac{436\#(17")(37.94")}{1\ \text{SCREW}\ (33.8")(73")} = 114\ \text{LBS}$$

$$T_{PERP.} = \frac{436\#(37.94")}{2\ \text{SCREWS}\ (73")} = 113\ \text{LBS}$$

$$T_{MAX} = \sqrt{114^2 + 113^2} = 161\ \text{LBS/SCREW (MAX)}$$

SHEAR (V)

$$V_{WALL} = \frac{436\#(37.94")}{2\ \text{SCREWS}\ (73")} = 113\ \text{LBS/SCREW (MAX)}$$

$$V_{FLOOR} = \frac{436\#(35.06")}{2\ \text{BOLTS}\ (73")} = 105\ \text{LBS/BOLT (MAX)}$$

NOTE:

ARCHITECT OR STRUCTURAL ENGINEER OF RECORD SHALL PROVIDE SUPPORT STRUCTURE TO SUPPORT WEIGHTS AND FORCES SHOWN.

2.4 Coolix 4000 Chiller

Illustration 9-4: Coolix 4000 chiller - Slab on grade

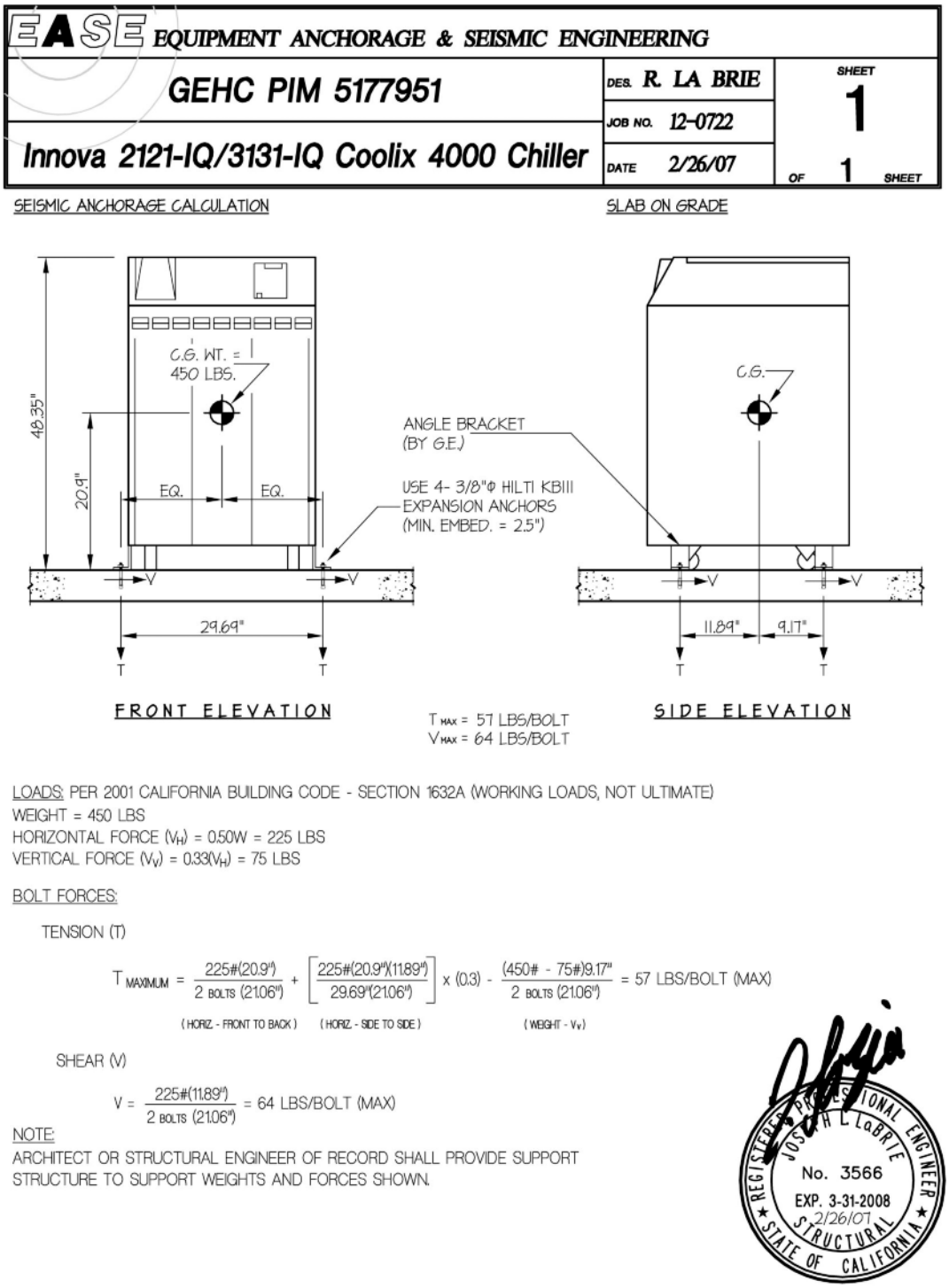

Illustration 9-5: Coolix 4000 chiller - Upper floor

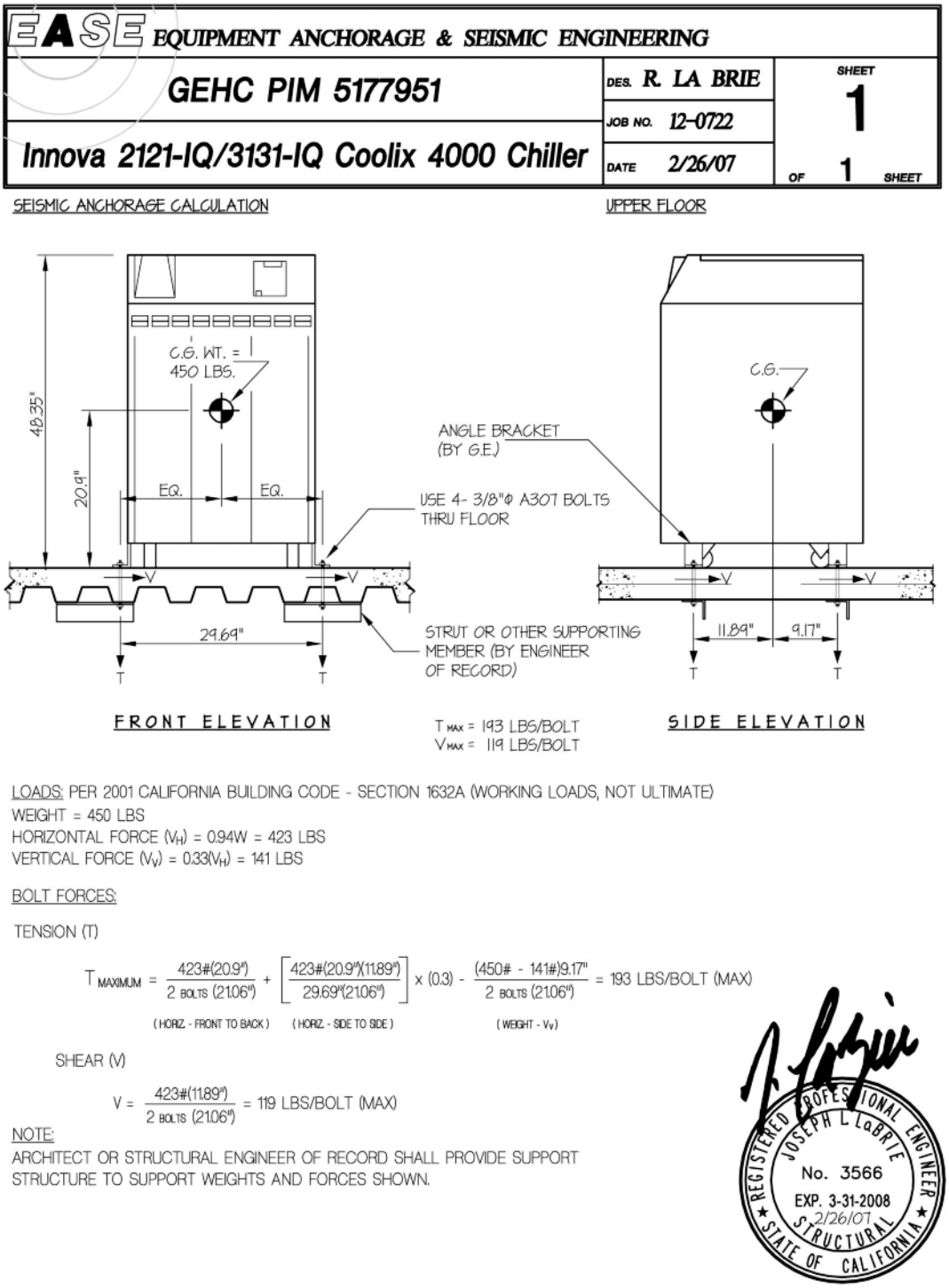

LOADS: PER 2001 CALIFORNIA BUILDING CODE - SECTION 1632A (WORKING LOADS, NOT ULTIMATE)
WEIGHT = 450 LBS
HORIZONTAL FORCE (V_H) = 0.94W = 423 LBS
VERTICAL FORCE (V_V) = 0.33(V_H) = 141 LBS

BOLT FORCES:

TENSION (T)

$$T_{MAXIMUM} = \underbrace{\frac{423\#(20.9")}{2\ \text{BOLTS}\ (21.06")}}_{\text{(HORIZ - FRONT TO BACK)}} + \underbrace{\left[\frac{423\#(20.9")(11.89")}{29.69"(21.06")}\right] \times (0.3)}_{\text{(HORIZ - SIDE TO SIDE)}} - \underbrace{\frac{(450\# - 141\#)9.17"}{2\ \text{BOLTS}\ (21.06")}}_{\text{(WEIGHT - V}_V\text{)}} = 193\ \text{LBS/BOLT (MAX)}$$

SHEAR (V)

$$V = \frac{423\#(11.89")}{2\ \text{BOLTS}\ (21.06")} = 119\ \text{LBS/BOLT (MAX)}$$

NOTE:
ARCHITECT OR STRUCTURAL ENGINEER OF RECORD SHALL PROVIDE SUPPORT STRUCTURE TO SUPPORT WEIGHTS AND FORCES SHOWN.

REGISTERED PROFESSIONAL ENGINEER
JOSEPH L LaBRIE
No. 3566
EXP. 3-31-2008
2/26/07
STRUCTURAL
STATE OF CALIFORNIA

2.5 Thermocon Detector Chiller

Illustration 9-6: Thermocon Detector Chiller - Slab on grade

EASE EQUIPMENT ANCHORAGE & SEISMIC ENGINEERING

GEHC PIM 5177951	DES. R. LA BRIE	SHEET 1
INNOVA 3131-IQ BIPLANE THERMOCON DETECTOR CHILLER	JOB NO. 12-0802	
	DATE 1/30/08	OF 1 SHEETS

SEISMIC ANCHORAGE — SLAB ON GRADE

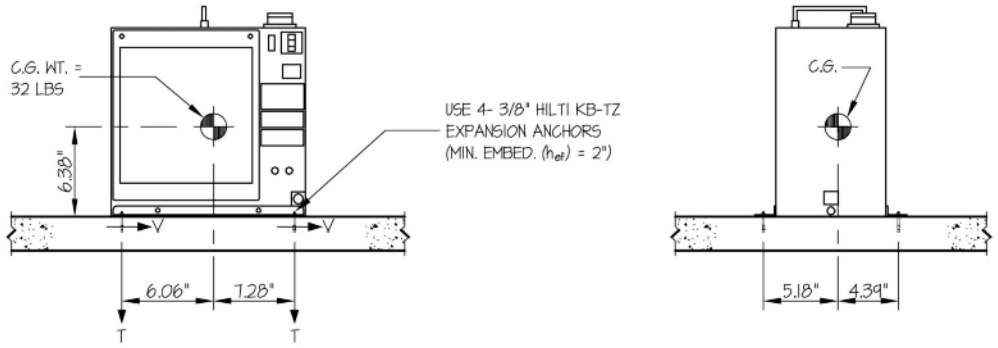

FRONT ELEVATION — SIDE ELEVATION

T_{MAX} = 2 LBS/BOLT
V_{MAX} = 4 LBS/BOLT

LOADS: PER 2007 CALIFORNIA BUILDING CODE SECTION 1613A AND ASCE 7-05 SECTIONS 12 AND 13.
WEIGHT = 32 LBS
HORIZONTAL FORCE (E_h) = 0.42 W_p = 13 LBS
VERTICAL FORCE (E_v) = 0.19 W_p = 6 LBS

BOLT FORCES:

TENSION (T)

$$T_{MAXIMUM} = \left[\frac{13\#(6.38'')(4.39'')}{13.34''(9.57'')} \times (0.3)\right] + \frac{13\#(6.38'')(7.28'')}{9.57''(13.34'')} - \frac{(32\#(0.6) - 6\#)(7.28'')(4.39'')}{13.34''(9.57'')} = 2 \text{ LBS/BOLT (MAX)}$$

(HORIZ. - SIDE TO SIDE) (HORIZ. - FRONT TO BACK) (WEIGHT (0.6) - E_v)

SHEAR (V)

$$V_{MAXIMUM} = \frac{13\#(5.18'')}{2_{BOLTS}(9.57'')} = 4 \text{ LBS/BOLT (MAX)}$$

NOTE:
ARCHITECT OR STRUCTURAL ENGINEER OF RECORD SHALL PROVIDE SUPPORT STRUCTURE TO SUPPORT WEIGHTS AND FORCES SHOWN.

REGISTERED PROFESSIONAL ENGINEER
JOSEPH R. LABRIE
No. 3566
EXP. 3-31-2010
1/30/08
STRUCTURAL
STATE OF CALIFORNIA

Illustration 9-7: Thermocon Detector Chiller - Upper floor

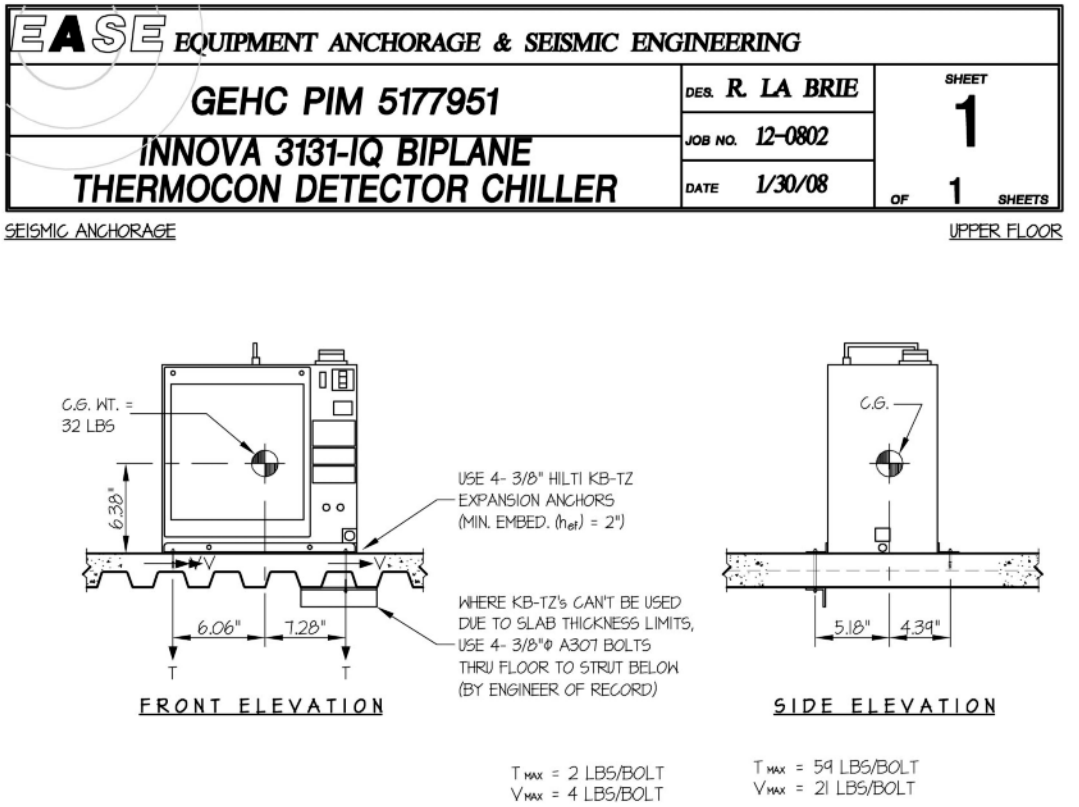

LOADS: PER 2007 CALIFORNIA BUILDING CODE SECTION 1613A AND ASCE 7-05 SECTIONS 12 AND 13.
WEIGHT = 32 LBS
HORIZONTAL FORCE (E_h) = 0.70 W_p = 22 LBS
VERTICAL FORCE (E_v) = 0.19 W_p = 6 LBS

BOLT FORCES:

TENSION (T)

$$T_{MAXIMUM} = \left[\frac{22\#(6.38'')(4.39'')}{13.34''(9.57'')} \times (0.3)\right] + \frac{22\#(6.38'')(7.28'')}{9.57''(13.34'')} - \frac{(32\#(0.6) - 6\#)(7.28'')(4.39'')}{13.34''(9.57'')} = 6 \text{ LBS/BOLT (MAX)}$$

(HORIZ. - SIDE TO SIDE) (HORIZ. - FRONT TO BACK) (WEIGHT (0.6) - E_v)

SHEAR (V)

$$V_{MAXIMUM} = \frac{22\#(5.18'')}{2_{BOLTS}(9.57'')} = 6 \text{ LBS/BOLT (MAX)}$$

NOTE:
ARCHITECT OR STRUCTURAL ENGINEER OF RECORD SHALL PROVIDE SUPPORT STRUCTURE TO SUPPORT WEIGHTS AND FORCES SHOWN.

2.6 Fluoro UPS CE Cabinet

Illustration 9-8: Fluoro UPS CE cabinet - Slab on grade

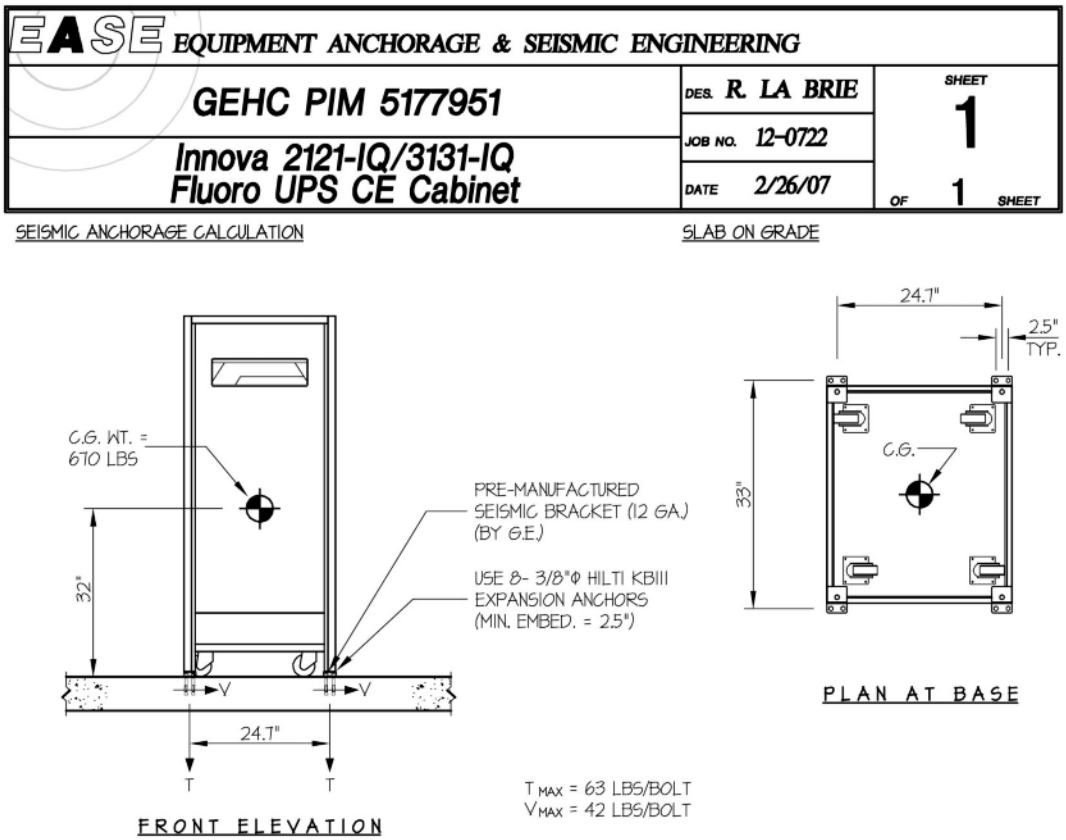

LOADS: PER 2001 CALIFORNIA BUILDING CODE - SECTION 1632A (WORKING LOADS, NOT ULTIMATE)
WEIGHT = 670 LBS
HORIZONTAL FORCE (V_H) = 0.50W = 335 LBS
VERTICAL FORCE (V_V) = 0.33(V_H) = 112 LBS

BOLT FORCES:

TENSION (T)

$$T_{MAXIMUM} = \underbrace{\frac{335\#(32")}{4\ \text{BOLTS}\ (24.7")}}_{\text{(HORIZ. - SIDE TO SIDE)}} + \underbrace{\left[\frac{335\#(32")}{4\ \text{BOLTS}\ (33")} \times (0.3)\right]}_{\text{(HORIZ. - FRONT TO BACK)}} - \underbrace{\frac{670\# - 112\#}{8\ \text{BOLTS}}}_{\text{(WEIGHT - } V_V\text{)}} = 63\ \text{LBS/BOLT (MAX)}$$

SHEAR (V)

$$V = \frac{335\#}{8\ \text{BOLTS}} = 42\ \text{LBS/BOLT (MAX)}$$

NOTE:
ARCHITECT OR STRUCTURAL ENGINEER OF RECORD SHALL PROVIDE SUPPORT STRUCTURE TO SUPPORT WEIGHTS AND FORCES SHOWN.

Illustration 9-9: Fluoro UPS CE cabinet - Upper floor

EASE EQUIPMENT ANCHORAGE & SEISMIC ENGINEERING		
GEHC PIM 5177951	DES. R. LA BRIE	SHEET 1
Innova 2121-IQ/3131-IQ Fluoro UPS CE Cabinet	JOB NO. 12-0722	
	DATE 2/26/07	OF 1 SHEET

SEISMIC ANCHORAGE CALCULATION

UPPER FLOOR

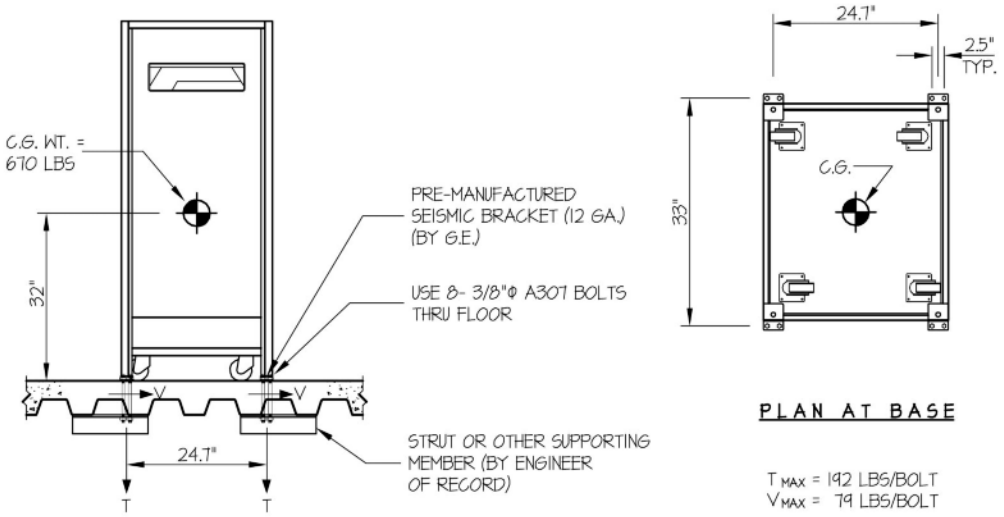

FRONT ELEVATION

PLAN AT BASE

LOADS: PER 2001 CALIFORNIA BUILDING CODE - SECTION 1632A (WORKING LOADS, NOT ULTIMATE)
WEIGHT = 670 LBS
HORIZONTAL FORCE (V_H) = 0.94W = 630 LBS
VERTICAL FORCE (V_V) = 0.33(V_H) = 210 LBS

BOLT FORCES:

TENSION (T)

$$T_{MAXIMUM} = \underbrace{\frac{630\#(32'')}{4_{\text{ BOLTS }}(24.7'')}}_{\text{(HORIZ - SIDE TO SIDE)}} + \underbrace{\left[\frac{630\#(32'')}{4_{\text{ BOLTS }}(33'')} \times (0.3)\right]}_{\text{(HORIZ - FRONT TO BACK)}} - \underbrace{\frac{670\# - 210\#}{8_{\text{ BOLTS }}}}_{\text{(WEIGHT - } V_V\text{)}} = 192 \text{ LBS/BOLT (MAX)}$$

SHEAR (V)

$$V = \frac{630\#}{8_{\text{ BOLTS }}} = 79 \text{ LBS/BOLT (MAX)}$$

NOTE:
ARCHITECT OR STRUCTURAL ENGINEER OF RECORD SHALL PROVIDE SUPPORT STRUCTURE TO SUPPORT WEIGHTS AND FORCES SHOWN.

REGISTERED PROFESSIONAL ENGINEER
JOSEPH L LaBRIE
No. 3566
EXP. 3-31-2008
2/26/07
STRUCTURAL
STATE OF CALIFORNIA

2.7 Fluoro UPS UL Cabinet

Illustration 9-10: Fluoro UPS UL cabinet - Slab on grade

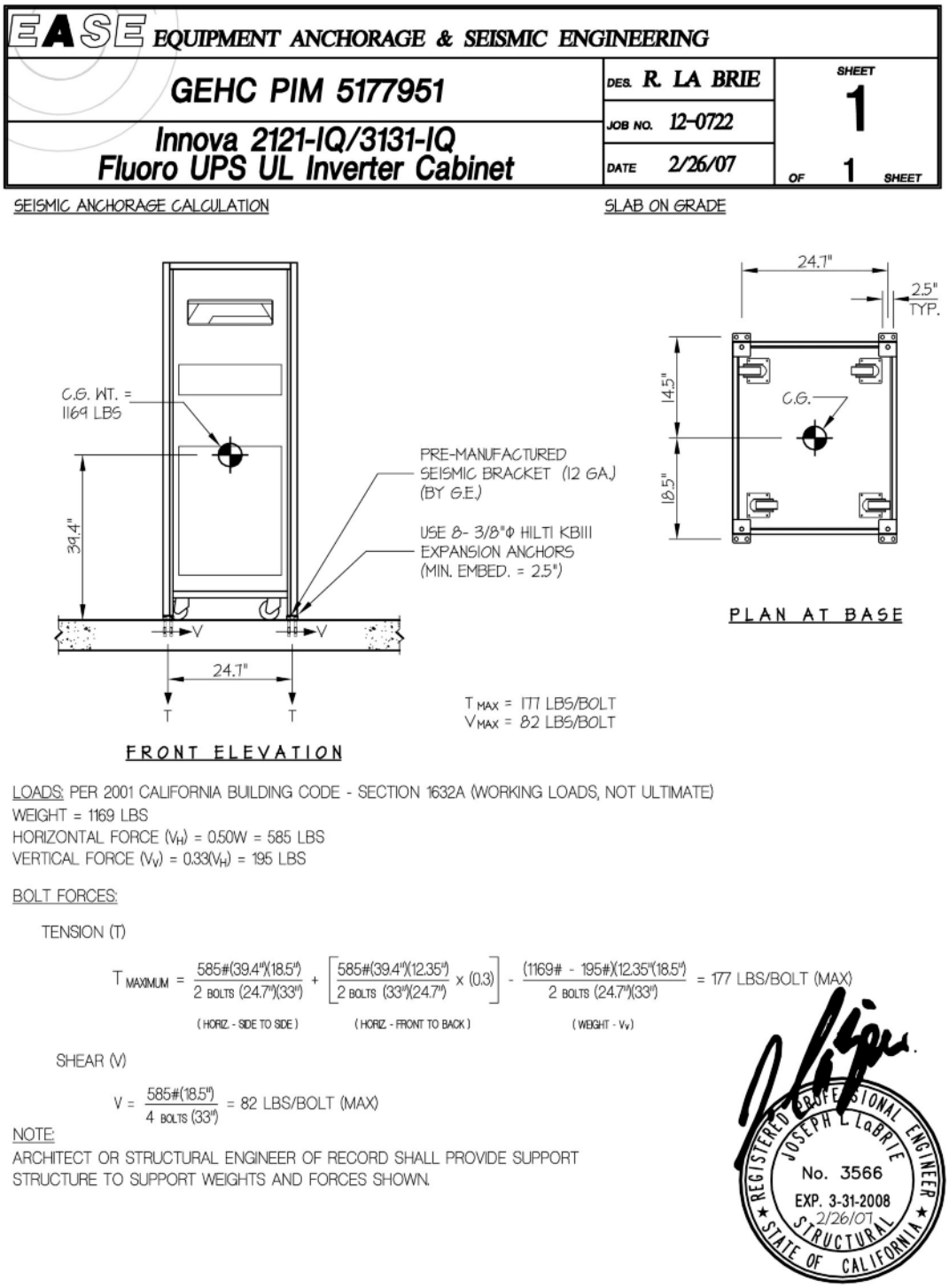

Illustration 9-11: Fluoro UPS UL cabinet - Upper floor

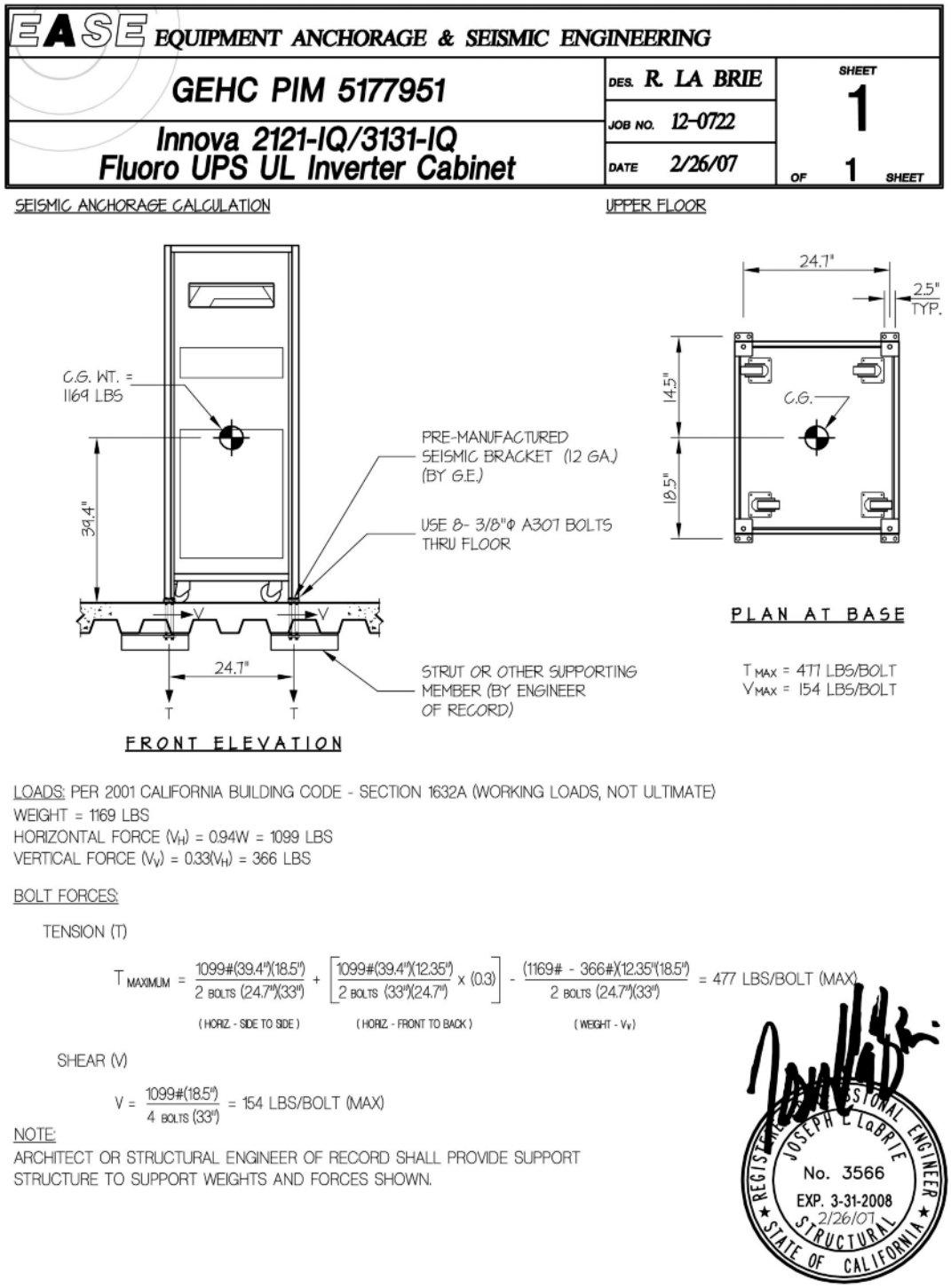

2.8 3 kVA Cabinet UPS - model 9125

Illustration 9-12: 3 kVA Cabinet UPS (model 9125) - Slab on grade

EASE EQUIPMENT ANCHORAGE & SEISMIC ENGINEERING		
GEHC PIM 5177951	DES. R. LA BRIE	SHEET 1
Innova 2121-IQ/3131-IQ UPS 3KVA	JOB NO. 12-0777	
	DATE 8/6/07	OF 1 SHEET

SEISMIC ANCHORAGE CALCULATION — SLAB ON GRADE

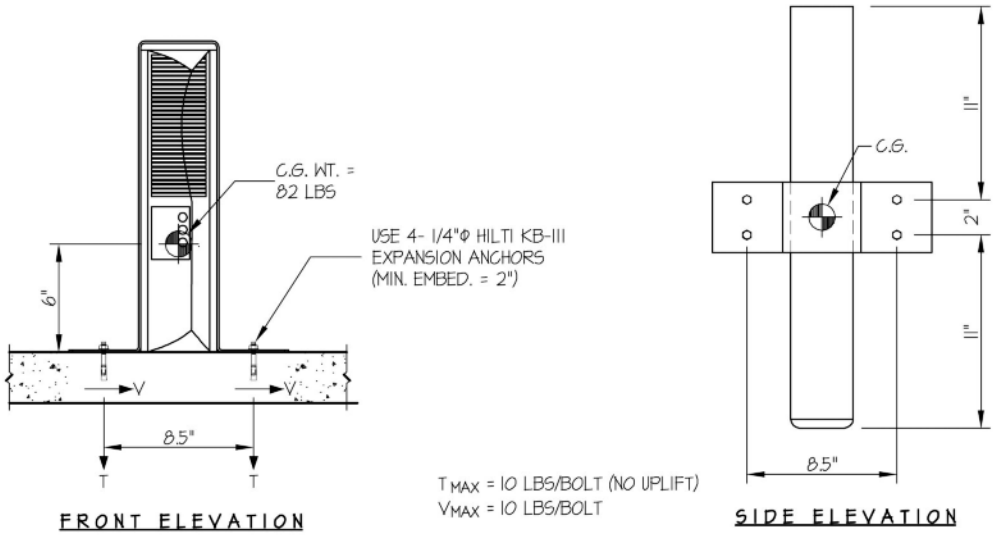

LOADS: PER 2001 CALIFORNIA BUILDING CODE - SECTION 1632A (WORKING LOADS, NOT ULTIMATE)
WEIGHT = 82 LBS
HORIZONTAL FORCE (V_H) = 0.50W = 41 LBS
VERTICAL FORCE (V_V) = 0.35W = 30 LBS

BOLT FORCES:

TENSION (T)

$$T_{MAXIMUM} = \left[\frac{41\#(6")}{4_{BOLTS}(12")} \times (0.3)\right] + \frac{41\#(6")}{2_{BOLTS}(8.5)} - \frac{100\# - 30\#}{4_{BOLTS}} = 0 \text{ LBS/BOLT (MAX) (NO UPLIFT)}$$

(HORIZ - FRONT TO BACK) (HORIZ - SIDE TO SIDE) (WEIGHT - V_V)

SHEAR (V)

$$V_{MAXIMUM} = \frac{41\#}{4_{BOLTS}} = 10 \text{ LBS/BOLT (MAX)}$$

NOTE:
ARCHITECT OR STRUCTURAL ENGINEER OF RECORD SHALL PROVIDE SUPPORT STRUCTURE TO SUPPORT WEIGHTS AND FORCES SHOWN.

Illustration 9-13: 3 kVA Cabinet UPS (model 9125) - Upper Floor

EASE EQUIPMENT ANCHORAGE & SEISMIC ENGINEERING		
GEHC PIM 5177951	DES. R. LA BRIE	SHEET 1
Innova 2121-IQ/3131-IQ UPS 3KVA	JOB NO. 12-0777	
	DATE 8/6/07	OF 1 SHEET

SEISMIC ANCHORAGE CALCULATION — UPPER FLOOR

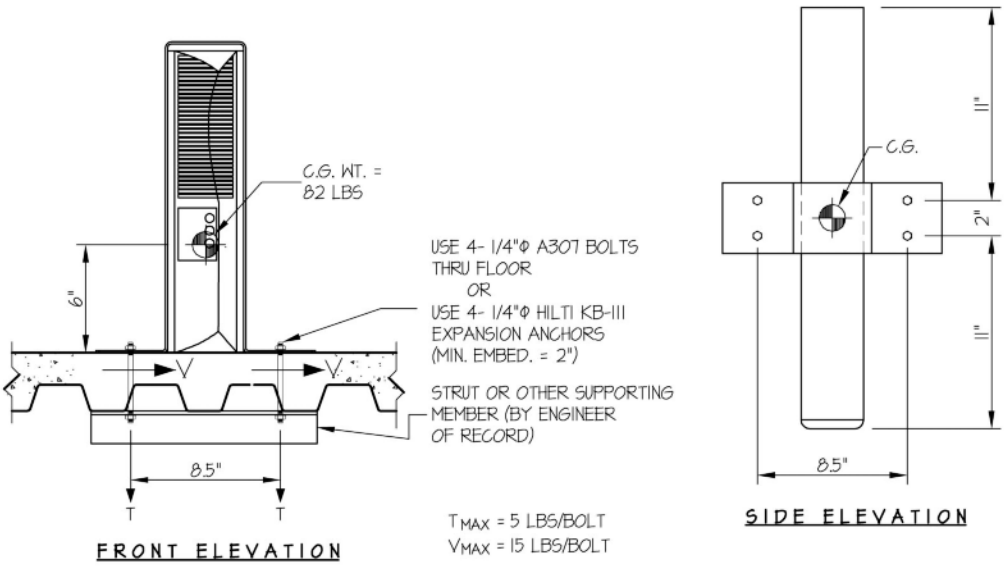

T_{MAX} = 5 LBS/BOLT
V_{MAX} = 15 LBS/BOLT

LOADS: PER 2001 CALIFORNIA BUILDING CODE - SECTION 1632A (WORKING LOADS, NOT ULTIMATE)
WEIGHT = 82 LBS
HORIZONTAL FORCE (V_H) = 0.71W = 58 LBS
VERTICAL FORCE (V_V) = 0.35W = 30 LBS

BOLT FORCES:

TENSION (T)

$$T_{MAXIMUM} = \left[\frac{58\#(6'')}{4_{BOLTS}\,(12'')} \times (0.3)\right] + \frac{58\#(6'')}{2_{BOLTS}\,(8.5)} - \frac{100\# - 30\#}{4_{BOLTS}} = 5 \text{ LBS/BOLT (MAX)}$$

(HORIZ. - FRONT TO BACK) (HORIZ. - SIDE TO SIDE) (WEIGHT - V_V)

SHEAR (V)

$$V_{MAXIMUM} = \frac{58\#}{4_{BOLTS}} = 15 \text{ LBS/BOLT (MAX)}$$

NOTE:
ARCHITECT OR STRUCTURAL ENGINEER OF RECORD SHALL PROVIDE SUPPORT STRUCTURE TO SUPPORT WEIGHTS AND FORCES SHOWN.

2.9 3 kVA Cabinet UPS - model 9130

Illustration 9-14: 3 kVA Cabinet UPS (model 9130) - Slab on grade

EASE EQUIPMENT ANCHORAGE & SEISMIC ENGINEERING		
GEHC OPTIONAL EQUIPMENT	DES. R. LA BRIE	SHEET 1
UPS 3KVA 9130	JOB NO. 12-10105	
	DATE 3/17/10	OF 1 SHEETS

SEISMIC ANCHORAGE — SLAB ON GRADE

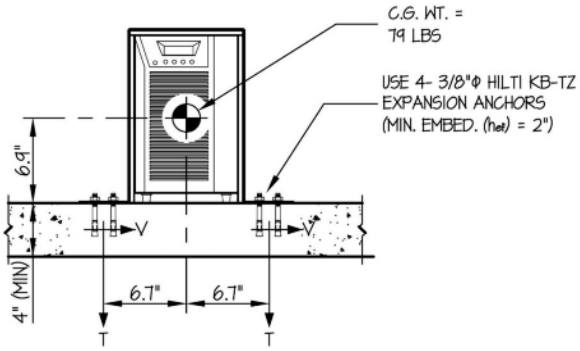

FRONT ELEVATION

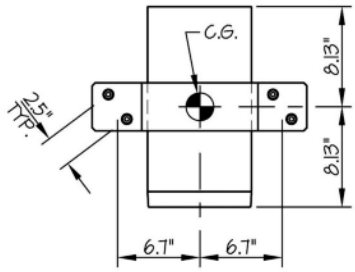

SIDE ELEVATION

T_{MAX} = 17 LBS/BOLT
V_{MAX} = 12 LBS/BOLT

LOADS: PER 2010 CALIFORNIA BUILDING CODE SECTION 1613A AND ASCE 7-05 SECTIONS 12 AND 13.
(ALLOWABLE STRESS DESIGN IS USED) (S_{DS} = 1.93, a_p = 1.0, I_p = 1.5, R_p = 2.5)
WEIGHT = 79 LBS.
HORIZONTAL FORCE (E_h) = $0.61W_p$ = 48 LBS.
VERTICAL FORCE (E_v) = $0.27W_p$ = 21 LBS.

BOLT FORCES:

TENSION (T)

$$T_{MAXIMUM} = \left[\frac{48\#(6.9'')}{2\ \text{BOLTS}\ (13.4'')} \times (0.3)\right] + \frac{48\#(6.9'')}{2\ \text{BOLTS}\ (8.13'')} - \frac{80\#(0.6) - 21\#}{4\ \text{BOLTS}} = 17\ \text{LBS/BOLT (MAX)}$$

(HORIZ - SIDE TO SIDE) (HORIZ - FRONT TO BACK) (WEIGHT (0.6) - E_v)

SHEAR (V)

$$V_{MAXIMUM} = \frac{48\#}{4\ \text{BOLTS}} = 12\ \text{LBS/BOLT (MAX)}$$

NOTE:
ARCHITECT OR STRUCTURAL ENGINEER OF RECORD SHALL PROVIDE SUPPORT STRUCTURE TO SUPPORT WEIGHTS AND FORCES SHOWN.

NOT STRUCTURALLY CERTIFIED

Illustration 9-15: 3 kVA Cabinet UPS (model 9130) - Elevated Floor

EASE EQUIPMENT ANCHORAGE & SEISMIC ENGINEERING		
GEHC OPTIONAL EQUIPMENT	DES. R. LA BRIE	SHEET 1
UPS 3KVA 9130	JOB NO. 12-10105	
	DATE 3/17/10	OF 1 SHEETS

SEISMIC ANCHORAGE

ELEVATED FLOOR

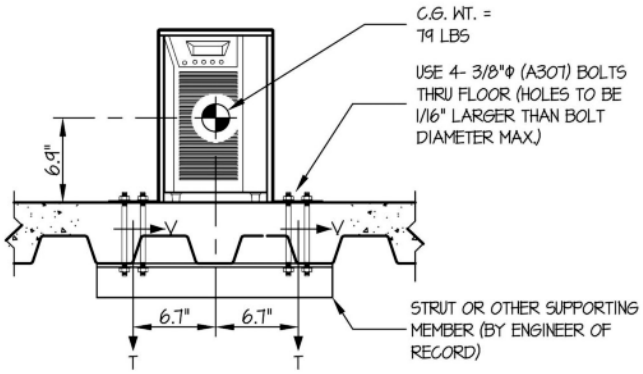

FRONT ELEVATION

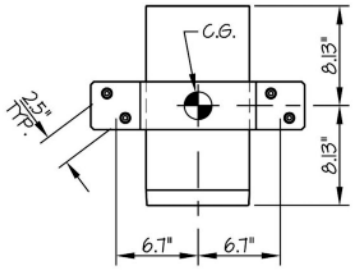

SIDE ELEVATION

T_{MAX} = 32 LBS/BOLT
V_{MAX} = 19 LBS/BOLT

NOTE
ANCHOR BOLTS MAY BE USED BUT SIZE AND EMBEDMENT IS TO BE DETERMINED BY THE ENGINEER OF RECORD BASED UPON FLOOR CHARACTERISTICS.

LOADS: PER 2010 CALIFORNIA BUILDING CODE SECTION 1613A AND ASCE 7-05 SECTIONS 12 AND 13.
(ALLOWABLE STRESS DESIGN IS USED) (S_{DS} = 1.93, a_p = 1.0, I_p = 1.5, R_p = 2.5)
WEIGHT = 79 LBS.
HORIZONTAL FORCE (E_h) = $0.97W_p$ = 77 LBS.
VERTICAL FORCE (E_v) = $0.27W_p$ = 21 LBS.

BOLT FORCES:

TENSION (T)

$$T_{MAXIMUM} = \left[\frac{77\#(6.9'')}{2\ \text{BOLTS}\ (13.4'')} \times (0.3)\right] + \frac{77\#(6.9'')}{2\ \text{BOLTS}\ (8.13'')} - \frac{79\#(0.6) - 21\#}{4\ \text{BOLTS}} = 32\ \text{LBS/BOLT (MAX)}$$

(HORIZ. - SIDE TO SIDE) (HORIZ. - FRONT TO BACK) (WEIGHT (0.6) - E_v)

SHEAR (V)

$$V_{MAXIMUM} = \frac{77\#}{4\ \text{BOLTS}} = 19\ \text{LBS/BOLT (MAX)}$$

NOTE:
ARCHITECT OR STRUCTURAL ENGINEER OF RECORD SHALL PROVIDE SUPPORT STRUCTURE TO SUPPORT WEIGHTS AND FORCES SHOWN.

REGISTERED PROFESSIONAL ENGINEER JONATHAN ROBERSON No. 4197 EXP. 6-30-2012 STRUCTURAL STATE OF CALIFORNIA
3/17/10
NOT STRUCTURALLY CERTIFIED

2.10 LC Positioner

Illustration 9-16: LC Positioner - Slab on grade 1/2

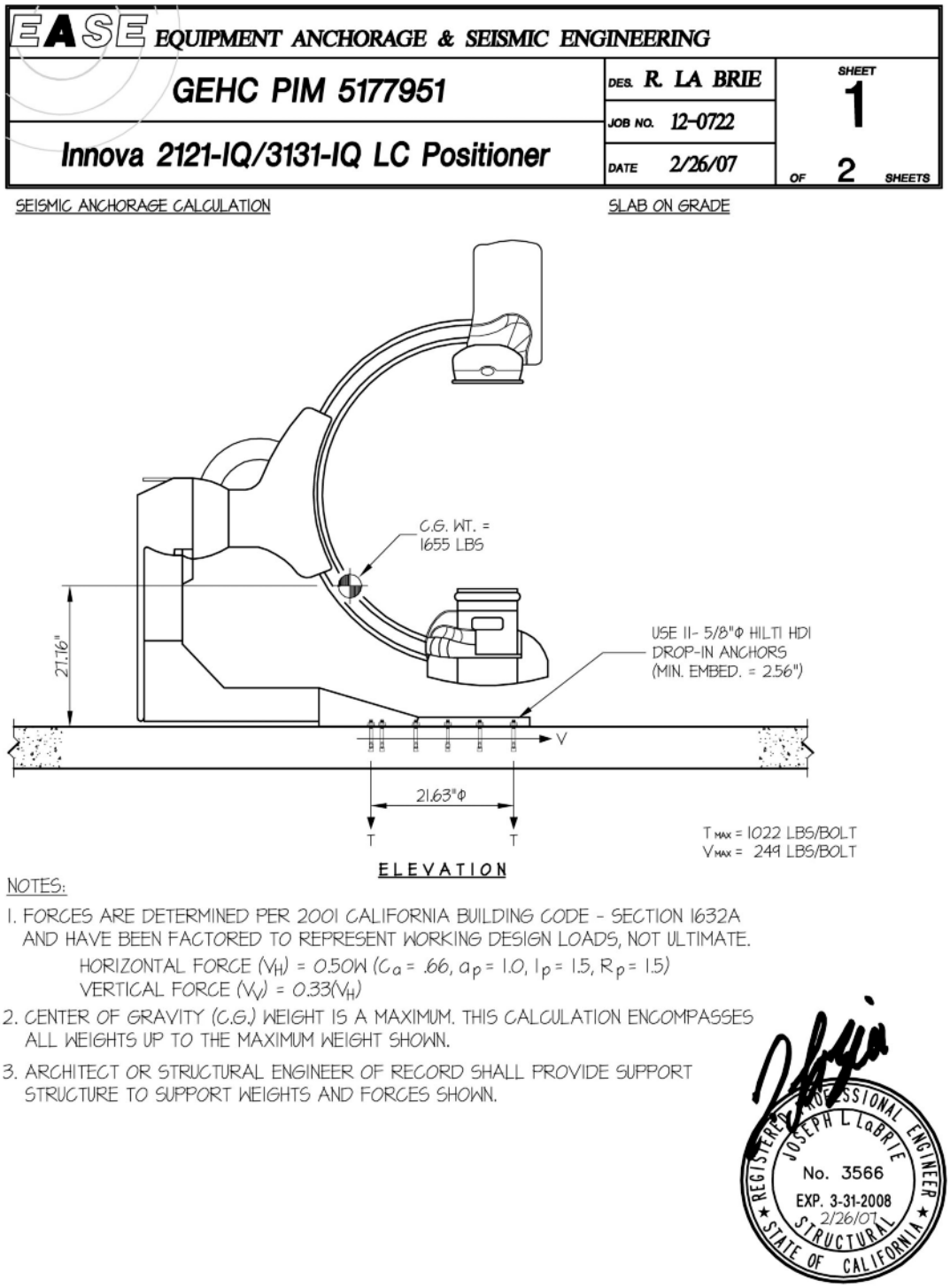

Illustration 9-17: LC Positioner - Slab on grade 2/2

EASE EQUIPMENT ANCHORAGE & SEISMIC ENGINEERING

GEHC PIM 5177951	DES. R. LA BRIE	SHEET 2
	JOB NO. 12-0722	
Innova 2121-IQ/3131-IQ LC Positioner	DATE 2/26/07	OF 2 SHEETS

SEISMIC ANCHORAGE CALCULATION

SLAB ON GRADE

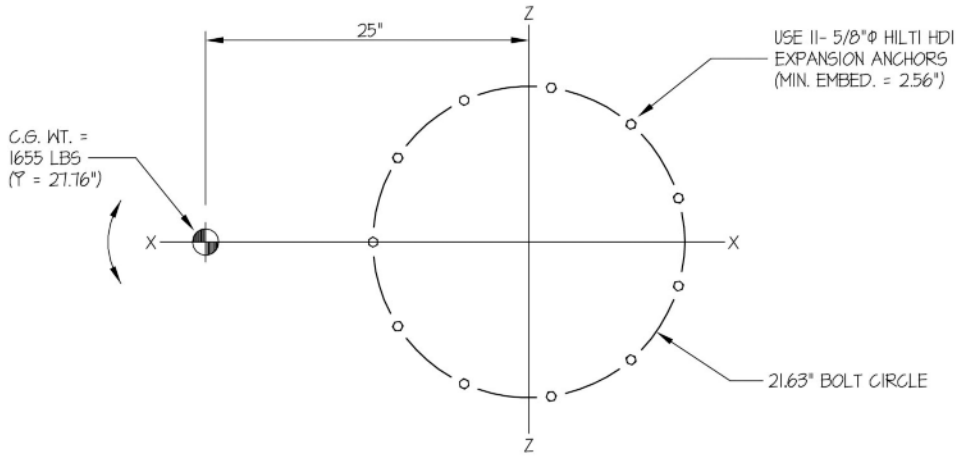

PLAN AT BASE

LOADS:

WEIGHT = 1655 LBS
HORIZONTAL FORCE (V_H) = 828 LBS
VERTICAL FORCE (V_V) = 276 LBS

BOLT GROUP PROPERTIES:

I_{X-X} = 643 in.^{4}
I_{Z-Z} = 643 in.^{4}
I_{Y-Y} = 1287 in.^{4}

MOMENTS:

M_{XX} = 828#(27.76") + (1655# + 276#)25" = 71,260"#
M_{ZZ} = 828#(27.76") + (1655# + 276#)25" = 71,260"#
M_{YY} = 828#(25") = 20,700"#

BOLT FORCES:

TENSION (T)

$$T = \frac{71260''\#(10.81'')}{643} - \frac{1655\# + 276\#}{11_{\text{BOLTS}}} = 1022 \text{ LBS/BOLT (MAX)}$$

SHEAR (V)

$$V = \frac{828\#}{11_{\text{BOLTS}}} + \frac{20700''\#(10.81'')}{1287} = 249 \text{ LBS/BOLT (MAX)}$$

Illustration 9-18: LC Positioner - Upper floor - 1/2

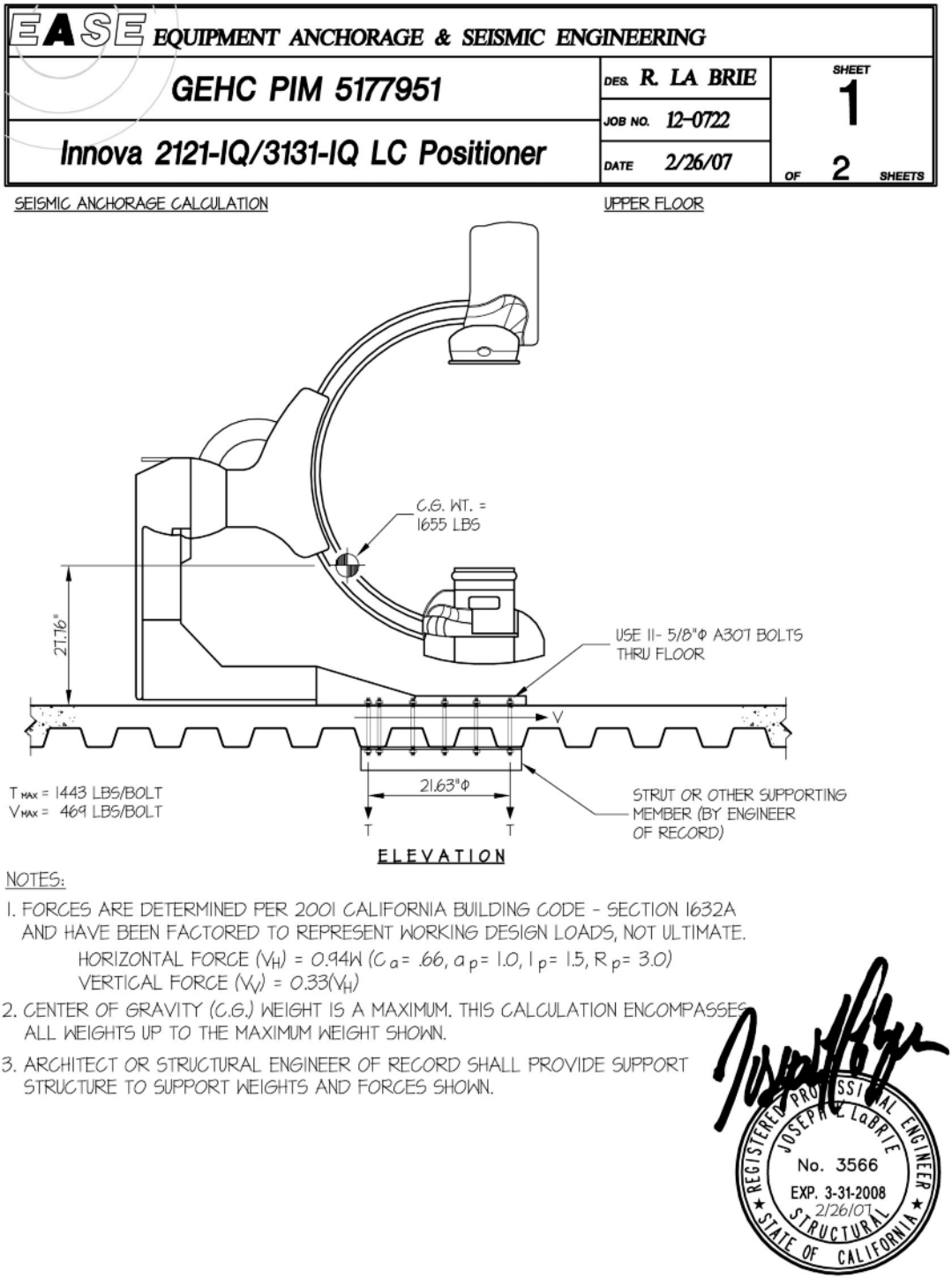

Illustration 9-19: LC Positioner - Upper floor 2/2

EASE EQUIPMENT ANCHORAGE & SEISMIC ENGINEERING		
GEHC PIM 5177951	DES. R. LA BRIE	SHEET 2
	JOB NO. 12-0722	
Innova 2121-IQ/3131-IQ LC Positioner	DATE 2/26/07	OF 2 SHEETS

SEISMIC ANCHORAGE CALCULATION

UPPER FLOOR

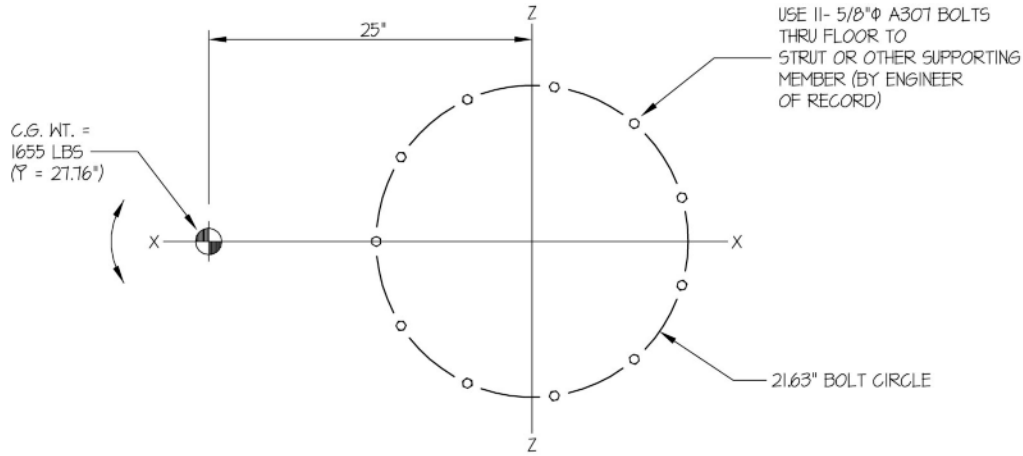

PLAN AT BASE

LOADS:

WEIGHT = 1655 LBS
HORIZONTAL FORCE (V_H) = 1558 LBS
VERTICAL FORCE (V_V) = 519 LBS

BOLT GROUP PROPERTIES:

$I_{X\text{-}X}$ = 643 in.^{4}
$I_{Z\text{-}Z}$ = 643 in.^{4}
$I_{Y\text{-}Y}$ = 1287 in.^{4}

MOMENTS:

M_{XX} = 1558#(27.76") + (1655# + 519#)25" = 97,600"#
M_{ZZ} = 1558#(27.76") + (1655# + 519#)25" = 97,600"#
M_{YY} = 1558#(25") = 38,950"#

BOLT FORCES:

TENSION (T)

$$T = \frac{97600''\#(10.81'')}{643} - \frac{1655\# + 519\#}{11_{\text{BOLTS}}} = 1443 \text{ LBS/BOLT (MAX)}$$

SHEAR (V)

$$V = \frac{1558\#}{11_{\text{BOLTS}}} + \frac{38950''\#(10.81'')}{1287} = 469 \text{ LBS/BOLT (MAX)}$$

2.11 LP4 Positioner

Illustration 9-20: LP4 Positioner 1/2

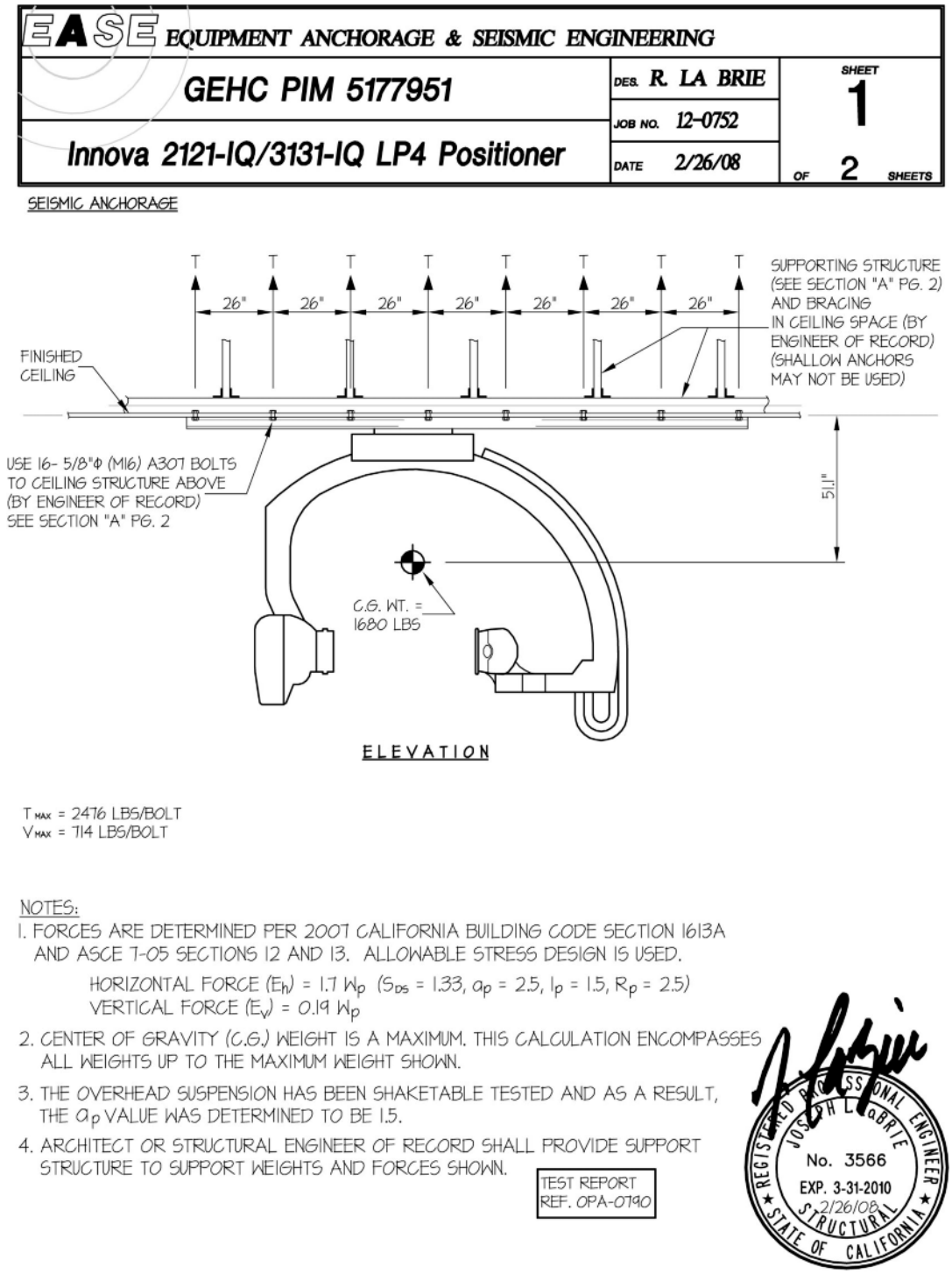

Illustration 9-21: LP4 Positioner 2/2

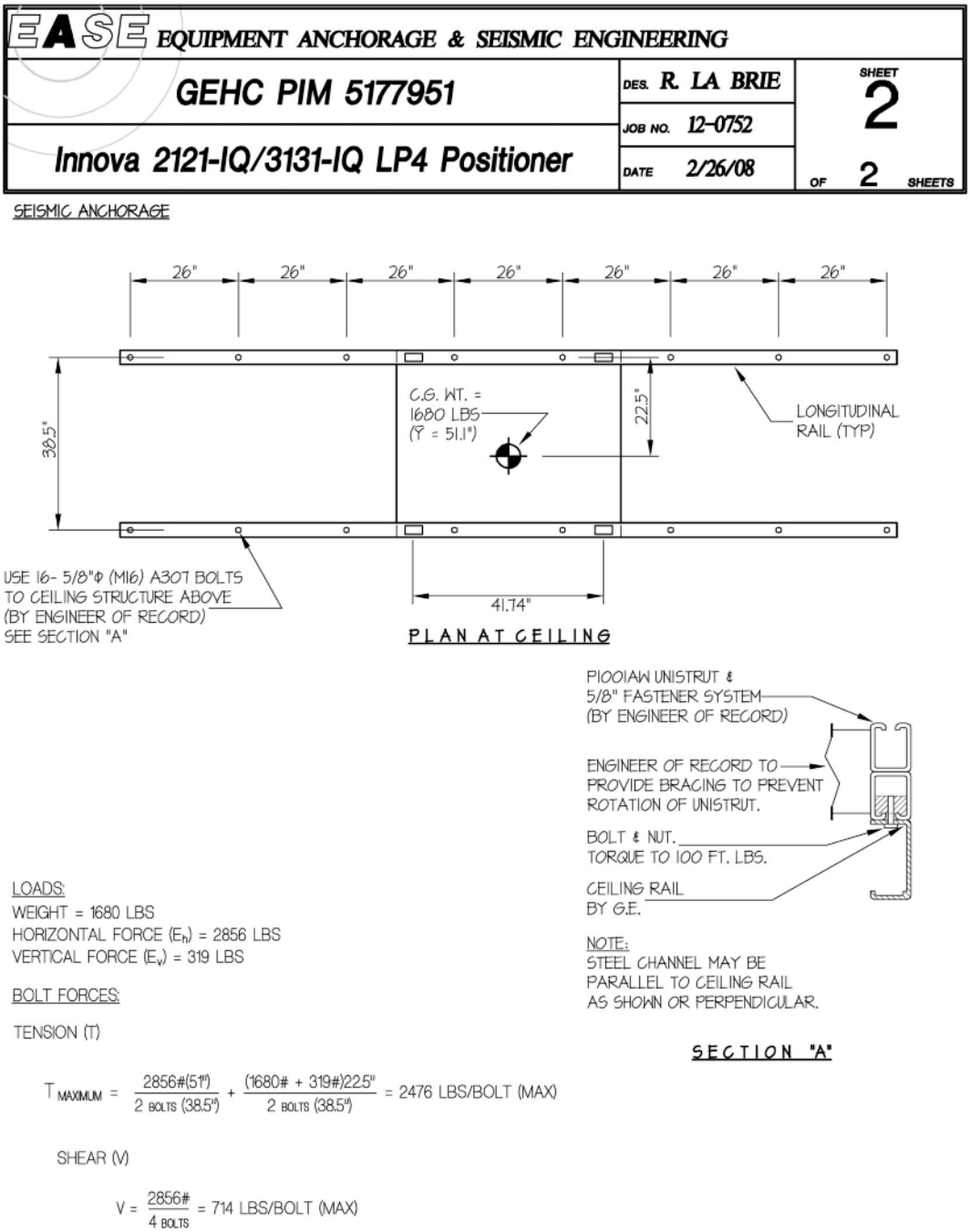

2.12 Main Disconnect Panel (PDB - CE)

Illustration 9-22: Main Disconnect Panel (PDB - CE) - Slab on grade

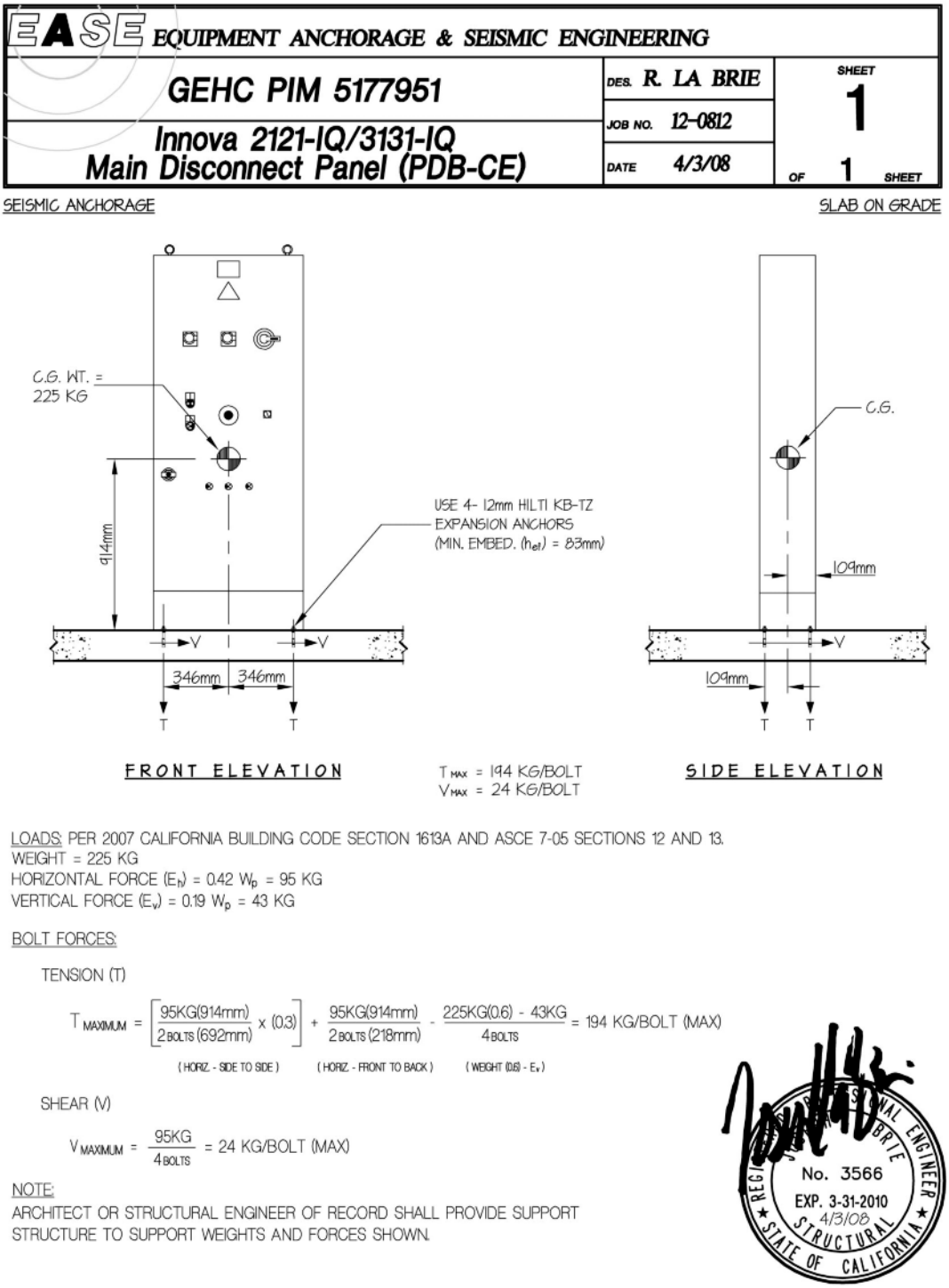

LOADS: PER 2007 CALIFORNIA BUILDING CODE SECTION 1613A AND ASCE 7-05 SECTIONS 12 AND 13.
WEIGHT = 225 KG
HORIZONTAL FORCE (E_h) = 0.42 W_p = 95 KG
VERTICAL FORCE (E_v) = 0.19 W_p = 43 KG

BOLT FORCES:

TENSION (T)

$$T_{MAXIMUM} = \left[\frac{95KG(914mm)}{2_{BOLTS}(692mm)} \times (0.3)\right] + \frac{95KG(914mm)}{2_{BOLTS}(218mm)} - \frac{225KG(0.6) - 43KG}{4_{BOLTS}} = 194\ KG/BOLT\ (MAX)$$

(HORIZ. - SIDE TO SIDE) (HORIZ. - FRONT TO BACK) (WEIGHT (0.6) - E_v)

SHEAR (V)

$$V_{MAXIMUM} = \frac{95KG}{4_{BOLTS}} = 24\ KG/BOLT\ (MAX)$$

NOTE:
ARCHITECT OR STRUCTURAL ENGINEER OF RECORD SHALL PROVIDE SUPPORT STRUCTURE TO SUPPORT WEIGHTS AND FORCES SHOWN.

REGISTERED PROFESSIONAL ENGINEER
R. LA BRIE
No. 3566
EXP. 3-31-2010
4/3/08
STRUCTURAL
STATE OF CALIFORNIA

Illustration 9-23: Main Disconnect Panel (PDB - CE) - Upper floor

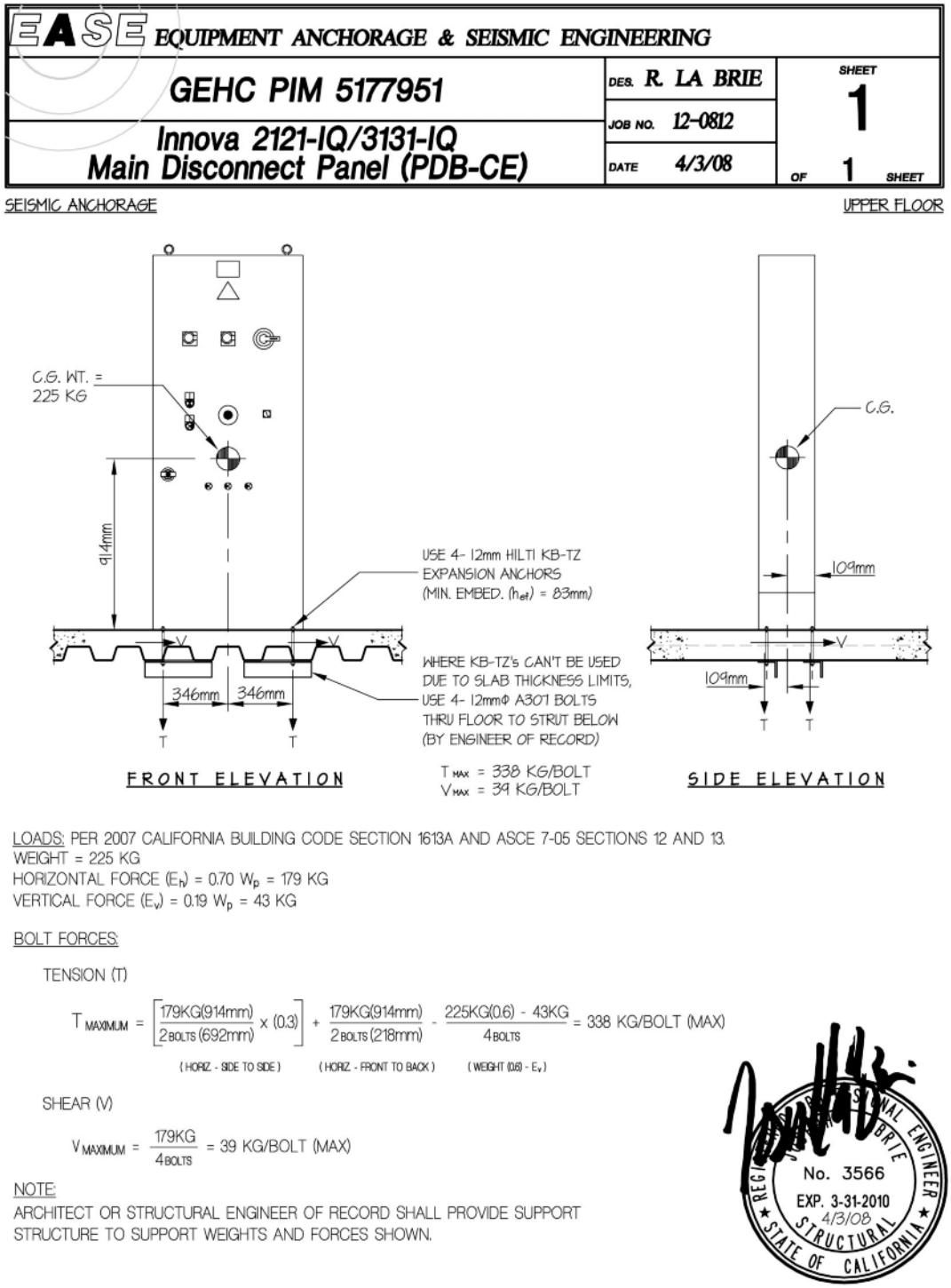

LOADS: PER 2007 CALIFORNIA BUILDING CODE SECTION 1613A AND ASCE 7-05 SECTIONS 12 AND 13.
WEIGHT = 225 KG
HORIZONTAL FORCE (E_h) = 0.70 W_p = 179 KG
VERTICAL FORCE (E_v) = 0.19 W_p = 43 KG

BOLT FORCES:

TENSION (T)

$$T_{MAXIMUM} = \left[\frac{179KG(914mm)}{2_{BOLTS}(692mm)} \times (0.3)\right] + \frac{179KG(914mm)}{2_{BOLTS}(218mm)} - \frac{225KG(0.6) - 43KG}{4_{BOLTS}} = 338\ KG/BOLT\ (MAX)$$

(HORIZ - SIDE TO SIDE) (HORIZ - FRONT TO BACK) (WEIGHT (0.6) - E_v)

SHEAR (V)

$$V_{MAXIMUM} = \frac{179KG}{4_{BOLTS}} = 39\ KG/BOLT\ (MAX)$$

NOTE:
ARCHITECT OR STRUCTURAL ENGINEER OF RECORD SHALL PROVIDE SUPPORT STRUCTURE TO SUPPORT WEIGHTS AND FORCES SHOWN.

REGISTERED PROFESSIONAL ENGINEER
R. LA BRIE
No. 3566
EXP. 3-31-2010
4/3/08
STRUCTURAL
STATE OF CALIFORNIA

2.13 Main Disconnect Panel (PDB - UL)

Illustration 9-24: Main Disconnect Panel (PDB - UL) - Slab on grade

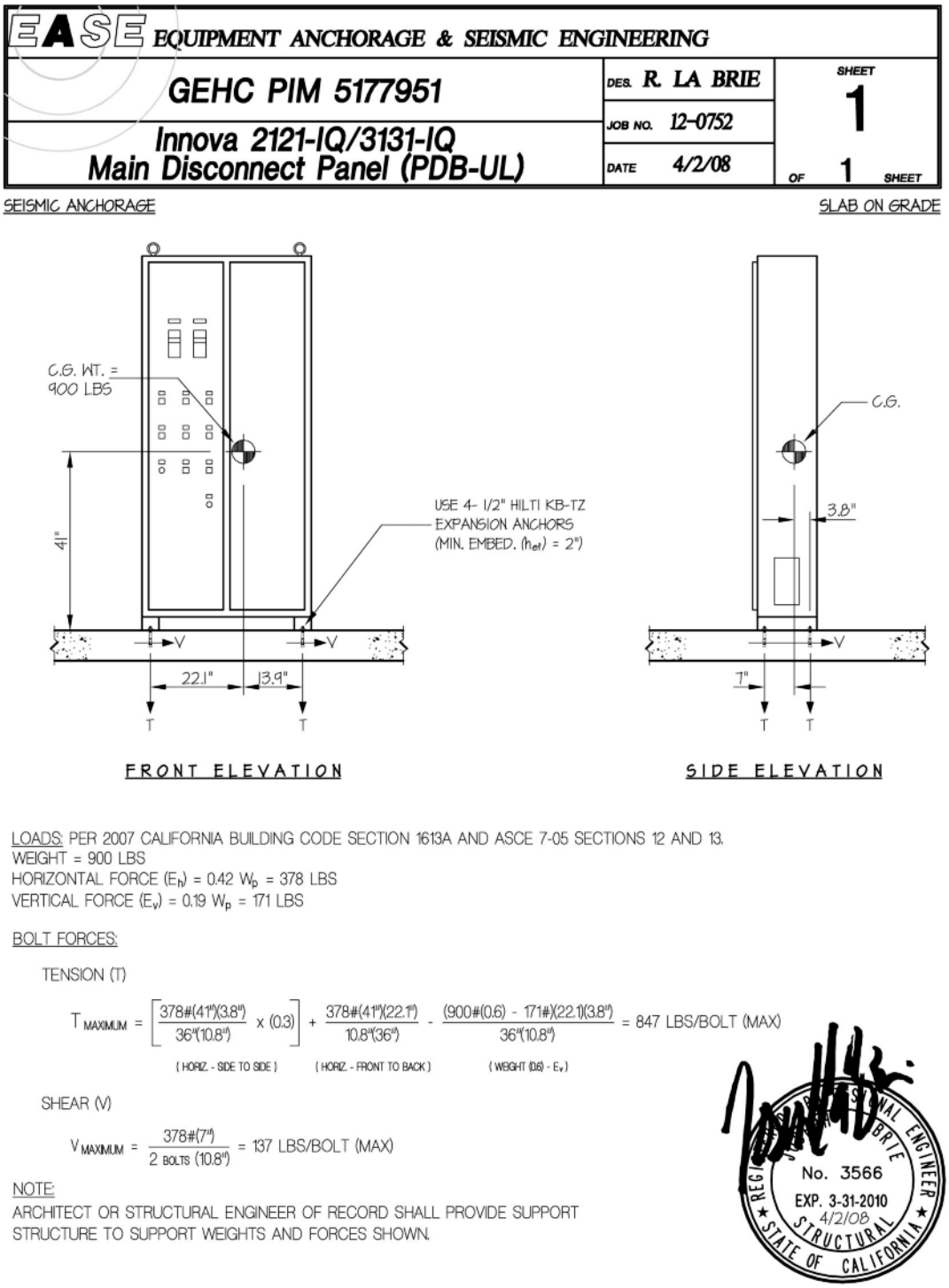

Illustration 9-25: Main Disconnect Panel (PDB - UL) - Upper floor

EASE EQUIPMENT ANCHORAGE & SEISMIC ENGINEERING

GEHC PIM 5177951	DES. R. LA BRIE	SHEET 1
Innova 2121-IQ/3131-IQ Main Disconnect Panel (PDB-UL)	JOB NO. 12-0752	
	DATE 4/2/08	OF 1 SHEET

SEISMIC ANCHORAGE — UPPER FLOOR

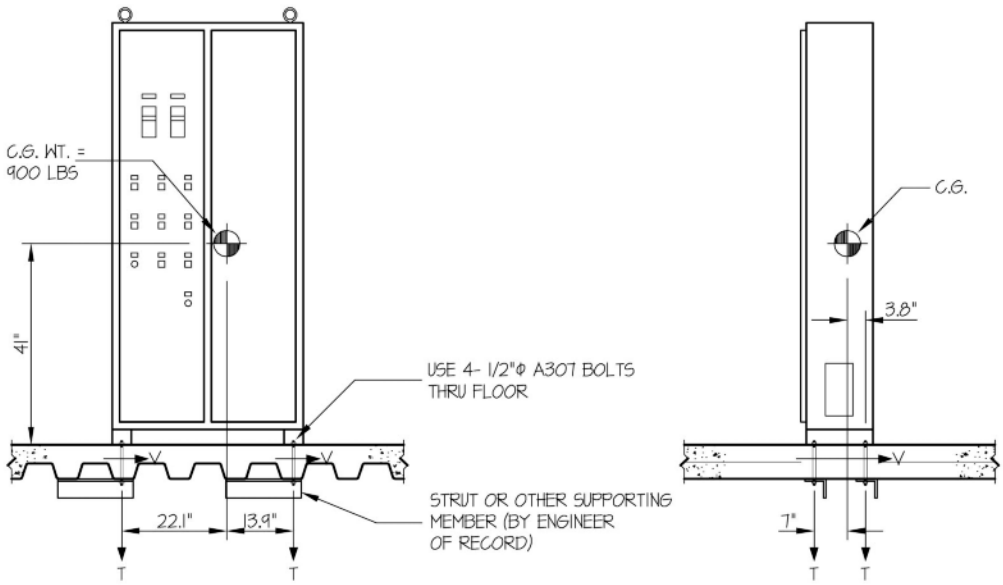

FRONT ELEVATION — SIDE ELEVATION

LOADS: PER 2007 CALIFORNIA BUILDING CODE SECTION 1613A AND ASCE 7-05 SECTIONS 12 AND 13.
WEIGHT = 900 LBS
HORIZONTAL FORCE (E_h) = 0.70 W_p = 630 LBS
VERTICAL FORCE (E_v) = 0.19 W_p = 171 LBS

BOLT FORCES:

TENSION (T)

$$T_{MAXIMUM} = \left[\frac{630\#(41'')(3.8'')}{36''(10.8'')} \times (0.3)\right] + \frac{630\#(41'')(22.1'')}{10.8''(36'')} - \frac{(900\#(0.6) - 171\#)(22.1)(3.8'')}{36''(10.8'')} = 1464 \text{ LBS/BOLT (MAX)}$$

(HORIZ. - SIDE TO SIDE) (HORIZ. - FRONT TO BACK) (WEIGHT (0.6) - E_v)

SHEAR (V)

$$V_{MAXIMUM} = \frac{630\#(7'')}{2 \text{ BOLTS } (10.8'')} = 204 \text{ LBS/BOLT (MAX)}$$

NOTE:
ARCHITECT OR STRUCTURAL ENGINEER OF RECORD SHALL PROVIDE SUPPORT STRUCTURE TO SUPPORT WEIGHTS AND FORCES SHOWN.

REGISTERED PROFESSIONAL ENGINEER — R. LA BRIE — No. 3566 — EXP. 3-31-2010 — 4/2/08 — STRUCTURAL — STATE OF CALIFORNIA

2.14 Omega IV Table

Illustration 9-26: Omega IV Table - Slab on grade 1/2

EASE EQUIPMENT ANCHORAGE & SEISMIC ENGINEERING		
GEHC PIM 5177951	DES. R. LA BRIE	SHEET 1
	JOB NO. 12-0722	
Innova 2121-IQ/3131-IQ Omega IV Table	DATE 2/26/07	OF 2 SHEETS

SEISMIC ANCHORAGE CALCULATION SLAB ON GRADE

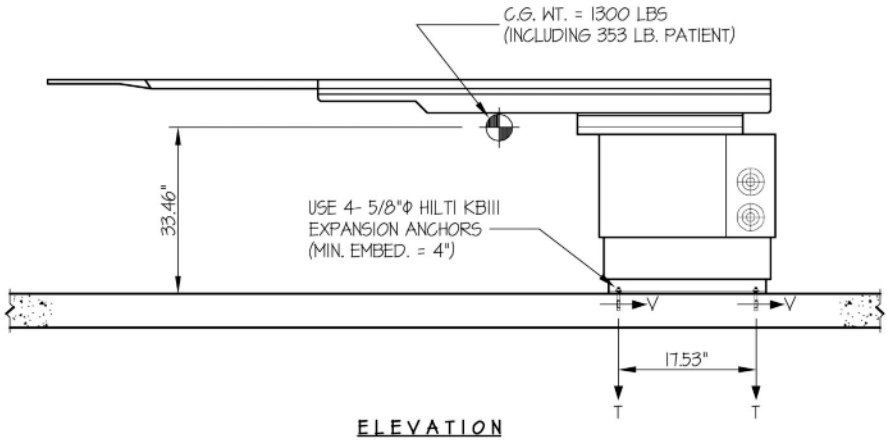

T_{MAX} = 2694 LBS/BOLT
V_{MAX} = 664 LBS/BOLT

NOTES:

1. FORCES ARE DETERMINED PER 2001 CALIFORNIA BUILDING CODE - SECTION 1632A AND HAVE BEEN FACTORED TO REPRESENT WORKING DESIGN LOADS, NOT ULTIMATE.
   HORIZONTAL FORCE (V_H) = 0.50W (C_a = .66, a_p = 1.0, I_p = 1.5, R_p = 1.5)
   VERTICAL FORCE (V_V) = 0.33(V_H)
2. CENTER OF GRAVITY (C.G.) WEIGHT IS A MAXIMUM. THIS CALCULATION ENCOMPASSES ALL WEIGHTS UP TO THE MAXIMUM WEIGHT SHOWN.
3. ARCHITECT OR STRUCTURAL ENGINEER OF RECORD SHALL PROVIDE SUPPORT STRUCTURE TO SUPPORT WEIGHTS AND FORCES SHOWN.

Illustration 9-27: Omega IV Table - Slab on grade 2/2

EASE EQUIPMENT ANCHORAGE & SEISMIC ENGINEERING		
GEHC PIM 5177951	DES. R. LA BRIE	SHEET 2
	JOB NO. 12-0722	
Innova 2121-IQ/3131-IQ Omega IV Table	DATE 2/26/07	OF 2 SHEETS

SEISMIC ANCHORAGE CALCULATION SLAB ON GRADE

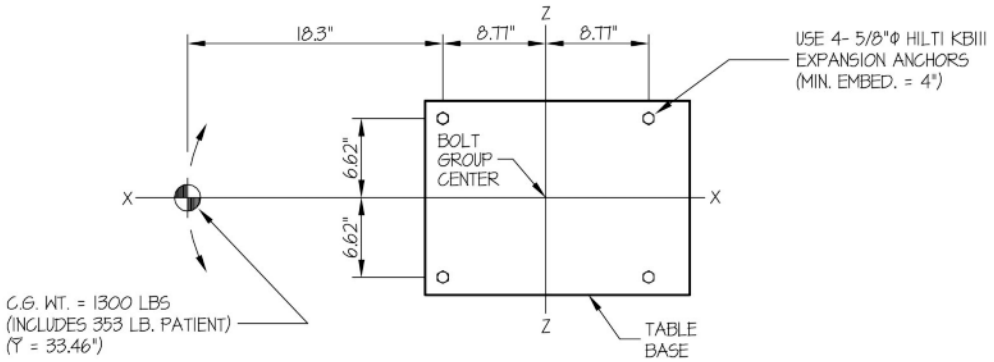

PLAN AT BASE

LOADS:
WEIGHT = 1300 LBS (INCLUDING 353 LB. PATIENT)
HORIZONTAL FORCE (V_H) = 650 LBS
VERTICAL FORCE (V_V) = 217 LBS

BOLT FORCES:

TENSION (T)

$$T_{MAXIMUM} = \left[\frac{650\#(33.46'')}{2\ \text{BOLTS}\ (17.53'')} \times (0.3)\right] + \frac{650\#(33.46'')(18.3'')}{13.23''(17.53'')} + \frac{(1300\# + 217\#)(18.3'')}{2\ \text{BOLTS}\ (17.53'')} = 2694\ \text{LBS/BOLT (MAX)}$$

(HORIZ. - SIDE TO SIDE) (HORIZ. - FRONT TO BACK) (WEIGHT - V_V)

SHEAR (V)

$$V = \frac{650\#(35.84'')}{2\ \text{BOLTS}\ (17.53'')} = 664\ \text{LBS/BOLT (MAX)}$$

Illustration 9-28: Omega IV Table - Upper floor 1/2

EASE EQUIPMENT ANCHORAGE & SEISMIC ENGINEERING

GEHC PIM 5177951	DES. R. LA BRIE	SHEET 1
	JOB NO. 12-0722	
Innova 2121-IQ/3131-IQ Omega IV Table	DATE 2/26/07	OF 2 SHEETS

SEISMIC ANCHORAGE CALCULATION

UPPER FLOOR

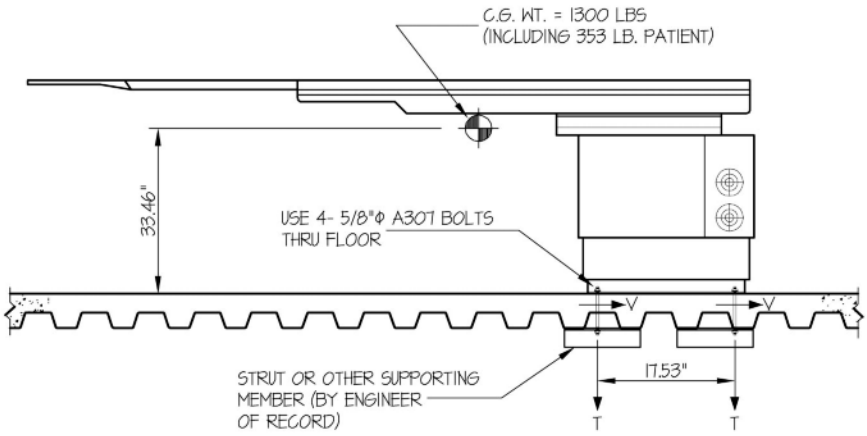

ELEVATION

T_{MAX} = 4467 LBS/BOLT
V_{MAX} = 1249 LBS/BOLT

NOTES:

1. FORCES ARE DETERMINED PER 2001 CALIFORNIA BUILDING CODE - SECTION 1632A AND HAVE BEEN FACTORED TO REPRESENT WORKING DESIGN LOADS, NOT ULTIMATE.
   HORIZONTAL FORCE (V_H) = 0.94W (C_a = .66, a_p = 1.0, I_p = 1.5, R_p = 3.0)
   VERTICAL FORCE (V_V) = 0.33(V_H)
2. CENTER OF GRAVITY (C.G.) WEIGHT IS A MAXIMUM. THIS CALCULATION ENCOMPASSES ALL WEIGHTS UP TO THE MAXIMUM WEIGHT SHOWN.
3. ARCHITECT OR STRUCTURAL ENGINEER OF RECORD SHALL PROVIDE SUPPORT STRUCTURE TO SUPPORT WEIGHTS AND FORCES SHOWN.

Illustration 9-29: Omega IV Table - Upper floor 2/2

EASE EQUIPMENT ANCHORAGE & SEISMIC ENGINEERING		
GEHC PIM 5177951	DES. R. LA BRIE	SHEET 2
	JOB NO. 12-0722	
Innova 2121-IQ/3131-IQ Omega IV Table	DATE 2/26/07	OF 2 SHEETS

SEISMIC ANCHORAGE CALCULATION

UPPER FLOOR

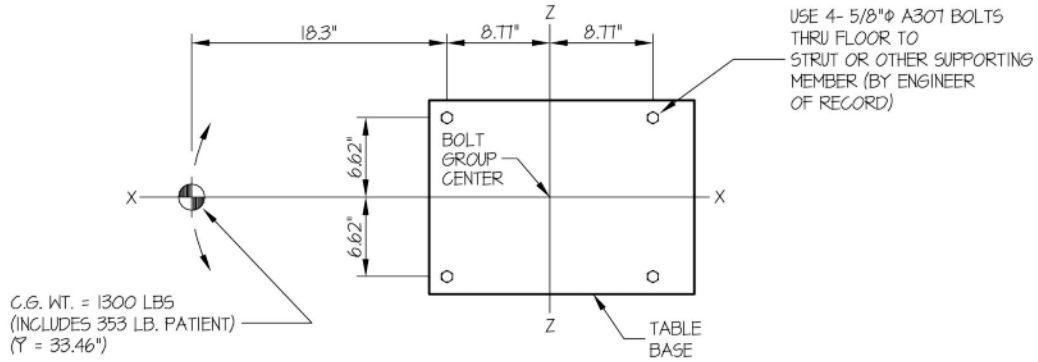

PLAN AT BASE

LOADS:

WEIGHT = 1300 LBS (INCLUDING 353 LB. PATIENT)

HORIZONTAL FORCE (V_H) = 1222 LBS

VERTICAL FORCE (V_V) = 407 LBS

BOLT FORCES:

TENSION (T)

$$T_{MAXIMUM} = \left[\frac{1222\#(33.46'')}{2\ \text{BOLTS}\ (17.53'')} \times (0.3)\right] + \frac{1222\#(33.46'')(18.3'')}{13.23''(17.53'')} + \frac{(1300\# + 407\#)(18.3'')}{2\ \text{BOLTS}\ (17.53'')} = 4467\ \text{LBS/BOLT (MAX)}$$

(HORIZ. - SIDE TO SIDE) (HORIZ. - FRONT TO BACK) (WEIGHT - V_V)

SHEAR (V)

$$V = \frac{1222\#(35.84'')}{2\ \text{BOLTS}\ (17.53'')} = 1249\ \text{LBS/BOLT (MAX)}$$

2.15 Omega V Long Table with Baseplate

Illustration 9-30: Omega V Long table w/baseplate - Slab on grade 1/2

EASE EQUIPMENT ANCHORAGE & SEISMIC ENGINEERING		
GEHC PIM 5177951	DES. R. LA BRIE	SHEET 1
Innova 2121-IQ/3131-IQ Omega V Long Table w/baseplate	JOB NO. 12-0722 DATE 3/5/07	OF 2 SHEETS

SEISMIC ANCHORAGE CALCULATION

SLAB ON GRADE

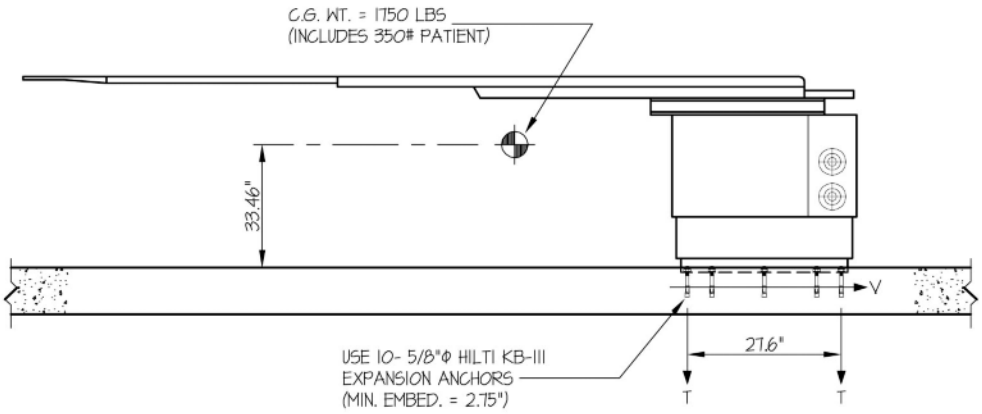

T_{MAX} = 1478 LBS/BOLT
V_{MAX} = 452 LBS/BOLT

ELEVATION

NOTES:

1. FORCES ARE DETERMINED PER 2001 CALIFORNIA BUILDING CODE - SECTION 1632A AND HAVE BEEN FACTORED TO REPRESENT WORKING DESIGN LOADS, NOT ULTIMATE.
   HORIZONTAL FORCE (V_H) = 0.50W (C_a = .66, a_p = 1.0, I_p = 1.5, R_p = 1.5)
   VERTICAL FORCE (V_V) = 0.33(V_H)
2. CENTER OF GRAVITY (C.G.) WEIGHT IS A MAXIMUM. THIS CALCULATION ENCOMPASSES ALL WEIGHTS UP TO THE MAXIMUM WEIGHT SHOWN.
3. ARCHITECT OR STRUCTURAL ENGINEER OF RECORD SHALL PROVIDE SUPPORT STRUCTURE TO SUPPORT WEIGHTS AND FORCES SHOWN.

REGISTERED PROFESSIONAL ENGINEER
JOSEPH L. LaBRIE
No. 3566
EXP. 3-31-2008
3/5/07
STRUCTURAL
STATE OF CALIFORNIA

Illustration 9-31: Omega V Long table w/baseplate - Slab on grade 2/2

EASE EQUIPMENT ANCHORAGE & SEISMIC ENGINEERING		
GEHC PIM 5177951	DES. R. LA BRIE	SHEET 2
Innova 2121-IQ/3131-IQ Omega V Long Table w/baseplate	JOB NO. 12-0722 DATE 3/5/07	OF 2 SHEETS

SEISMIC ANCHORAGE CALCULATION

SLAB ON GRADE

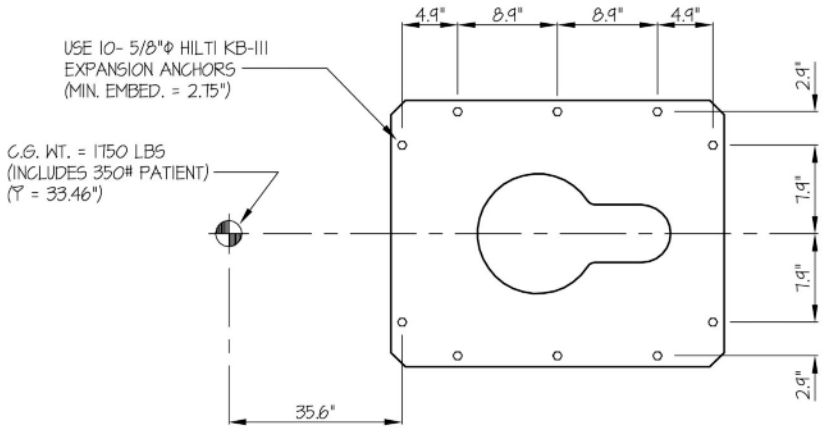

PLAN AT BASE

LOADS:

WEIGHT = 1750 LBS (INCLUDES 350# PATIENT)
HORIZONTAL FORCE (V_H) = 875 LBS
VERTICAL FORCE (V_V) = 292 LBS

BOLT FORCES:

TENSION (T)

$$T_{MAXIMUM} = \underbrace{\left[\frac{875\#(33.46'')}{4\,BOLTS(22.7'')} \times (0.3)\right]}_{T \leftrightarrow} + \underbrace{\frac{875\#(33.46'')(24.25'')}{2\,BOLTS(22.7'')(18.7'')}}_{T \updownarrow} + \underbrace{\frac{(1750\# + 292\#)24.25''}{4\,BOLTS(22.7'')}}_{T\,(W + V_V)} = 1478 \text{ LBS/BOLT (MAX)}$$

SHEAR (V)

$$V = \frac{875\#(46.95'')}{4\,BOLTS(22.7'')} = 452 \text{ LBS/BOLT (MAX)}$$

UNITY CHECK: $\frac{T_{ACTUAL}}{T_{ALLOW.}} + \frac{V_{ACTUAL}}{V_{ALLOW.}} = \left(\frac{1478}{1766}\right)^{\frac{5}{3}} + \left(\frac{452}{2578}\right)^{\frac{5}{3}} = .80 < 1.0 \therefore$ O.K.

Illustration 9-32: Omega V Long table w/baseplate - Upper floor 1/2

EASE EQUIPMENT ANCHORAGE & SEISMIC ENGINEERING

GEHC PIM 5177951	DES. R. LA BRIE	SHEET 1
Innova 2121-IQ/3131-IQ Omega V Long Table w/baseplate	JOB NO. 12-0722	
	DATE 3/5/07	OF 2 SHEETS

SEISMIC ANCHORAGE CALCULATION

UPPER FLOOR

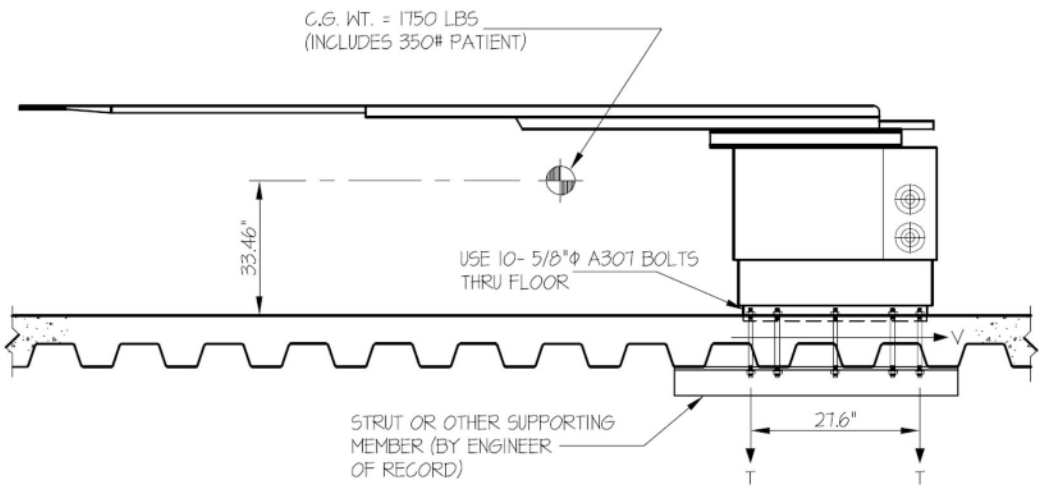

T_{MAX} = 2368 LBS/BOLT
V_{MAX} = 851 LBS/BOLT

ELEVATION

NOTES:

1. FORCES ARE DETERMINED PER 2001 CALIFORNIA BUILDING CODE - SECTION 1632A AND HAVE BEEN FACTORED TO REPRESENT WORKING DESIGN LOADS, NOT ULTIMATE.
   HORIZONTAL FORCE (V_H) = 0.94W (C_a = .66, a_p = 1.0, I_p = 1.5, R_p = 3.0)
   VERTICAL FORCE (V_V) = 0.33(V_H)
2. CENTER OF GRAVITY (C.G.) WEIGHT IS A MAXIMUM. THIS CALCULATION ENCOMPASSES ALL WEIGHTS UP TO THE MAXIMUM WEIGHT SHOWN.
3. ARCHITECT OR STRUCTURAL ENGINEER OF RECORD SHALL PROVIDE SUPPORT STRUCTURE TO SUPPORT WEIGHTS AND FORCES SHOWN.

REGISTERED PROFESSIONAL ENGINEER
JOSEPH L. LaBRIE
No. 3566
EXP. 3-31-2008
3/5/07
STRUCTURAL
STATE OF CALIFORNIA

Illustration 9-33: Omega V Long table w/baseplate - Upper floor 2/2

EASE EQUIPMENT ANCHORAGE & SEISMIC ENGINEERING		
GEHC PIM 5177951	DES. R. LA BRIE	SHEET 2
Innova 2121-IQ/3131-IQ Omega V Long Table w/baseplate	JOB NO. 12-0722 DATE 3/5/07	OF 2 SHEETS

SEISMIC ANCHORAGE CALCULATION

UPPER FLOOR

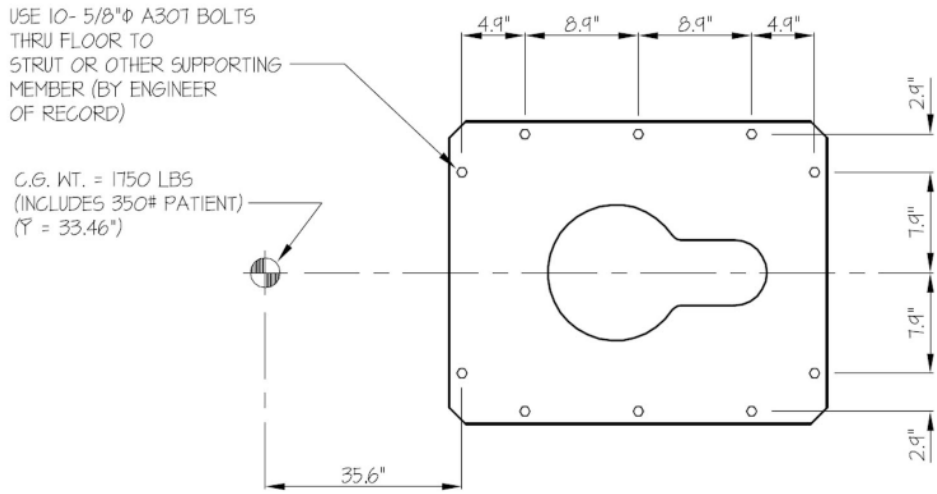

PLAN AT BASE

LOADS:

WEIGHT = 1750 LBS (INCLUDES 350# PATIENT)

HORIZONTAL FORCE (V_H) = 1645 LBS

VERTICAL FORCE (V_V) = 548 LBS

BOLT FORCES:

TENSION (T)

$$T_{MAXIMUM} = \underbrace{\left[\frac{1645\#(33.46'')}{4\ BOLTS(22.7'')} \times (0.3)\right]}_{T \leftrightarrow} + \underbrace{\frac{1645\#(33.46'')(24.25'')}{2\ BOLTS(22.7'')(18.7'')}}_{T \updownarrow} + \underbrace{\frac{(1750\# + 548\#)24.25''}{4\ BOLTS(22.7'')}}_{T\ (W + V_V)} = 2368\ LBS/BOLT\ (MAX)$$

SHEAR (V)

$$V = \frac{1645\#(46.95'')}{4\ BOLTS(22.7'')} = 851\ LBS/BOLT\ (MAX)$$

UNITY CHECK: $\frac{T_{ACTUAL}}{T_{ALLOW.}} + \frac{V_{ACTUAL}}{V_{ALLOW.}} = \left(\frac{2368}{6100}\right)^{\frac{5}{3}} + \left(\frac{851}{3050}\right)^{\frac{5}{3}} = .33 < 1.0 \therefore$ O.K.

2.16 Omega V Long Table

Illustration 9-34: Omega V long table - Slab on grade 1/2

EASE EQUIPMENT ANCHORAGE & SEISMIC ENGINEERING

GEHC PIM 5177951	DES. R. LA BRIE	SHEET 1
	JOB NO. 12-0722	
Innova 2121-IQ/3131-IQ Omega V Long Table	DATE 2/26/07	OF 2 SHEETS

SEISMIC ANCHORAGE CALCULATION

SLAB ON GRADE

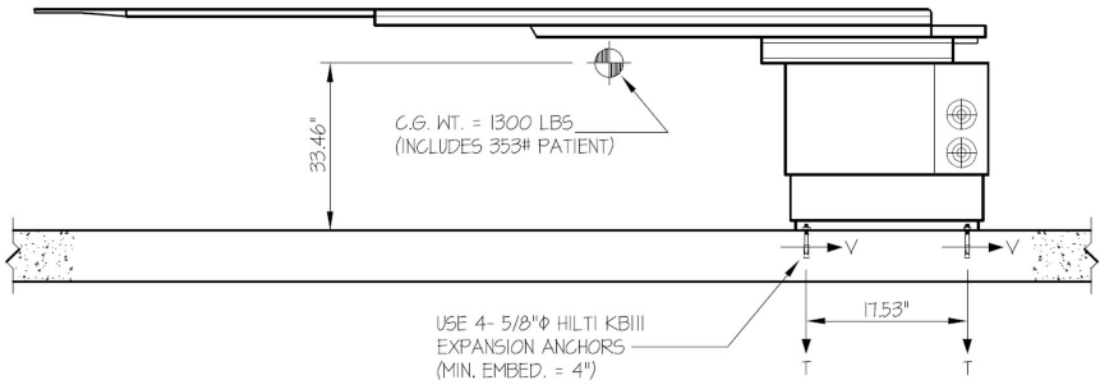

T_{MAX} = 4010 LBS/BOLT
V_{MAX} = 842 LBS/BOLT

ELEVATION

NOTES:

1. FORCES ARE DETERMINED PER 2001 CALIFORNIA BUILDING CODE - SECTION 1632A AND HAVE BEEN FACTORED TO REPRESENT WORKING DESIGN LOADS, NOT ULTIMATE.
   HORIZONTAL FORCE (V_H) = 0.50W (C_a = .66, a_p = 1.0, I_p = 1.5, R_p = 1.5)
   VERTICAL FORCE (V_V) = 0.33(V_H)
2. CENTER OF GRAVITY (C.G.) WEIGHT IS A MAXIMUM. THIS CALCULATION ENCOMPASSES ALL WEIGHTS UP TO THE MAXIMUM WEIGHT SHOWN.
3. ARCHITECT OR STRUCTURAL ENGINEER OF RECORD SHALL PROVIDE SUPPORT STRUCTURE TO SUPPORT WEIGHTS AND FORCES SHOWN.

Illustration 9-35: Omega V Long table - Slab on grade 2/2

EASE EQUIPMENT ANCHORAGE & SEISMIC ENGINEERING		
GEHC PIM 5177951	DES. R. LA BRIE	SHEET 2
	JOB NO. 12-0722	
Innova 2121-IQ/3131-IQ Omega V Long Table	DATE 2/26/07	OF 2 SHEETS

SEISMIC ANCHORAGE CALCULATION

SLAB ON GRADE

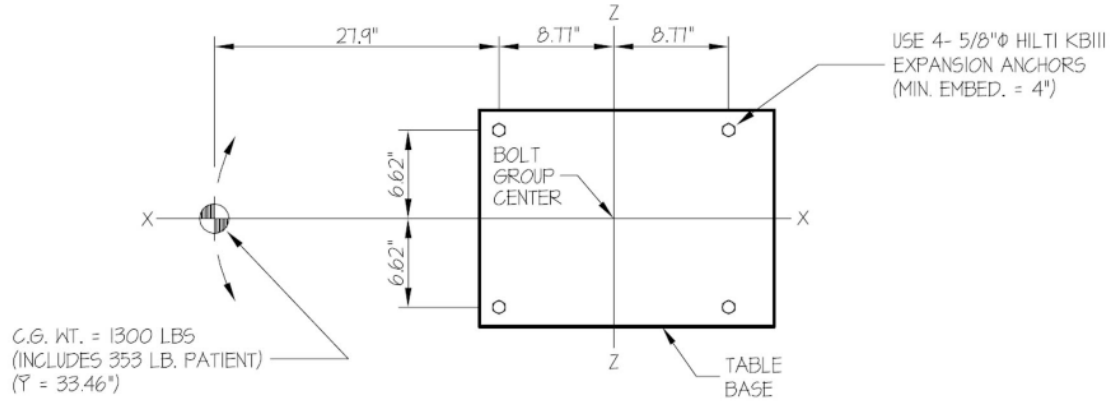

PLAN AT BASE

LOADS:

WEIGHT = 1300 LBS (INCLUDING 353 LB. PATIENT)

HORIZONTAL FORCE (V_H) = 650 LBS

VERTICAL FORCE (V_V) = 217 LBS

BOLT FORCES:

TENSION (T)

$$T_{MAXIMUM} = \left[\frac{650\#(33.46'')}{2\ \text{BOLTS}\ (17.53'')} \times (0.3)\right] + \frac{650\#(33.46'')(27.9'')}{13.23''(17.53'')} + \frac{(1300\# + 217\#)(27.9'')}{2\ \text{BOLTS}\ (17.53'')} = 4010\ \text{LBS/BOLT (MAX)}$$

(HORIZ. - SIDE TO SIDE) (HORIZ. - FRONT TO BACK) (WEIGHT - V_V)

SHEAR (V)

$$V = \frac{650\#(45.44'')}{2\ \text{BOLTS}\ (17.53'')} = 842\ \text{LBS/BOLT (MAX)}$$

Illustration 9-36: Omega V Long table - Upper floor 1/2

EASE EQUIPMENT ANCHORAGE & SEISMIC ENGINEERING

GEHC PIM 5177951	DES. R. LA BRIE	SHEET 1
	JOB NO. 12-0722	
Innova 2121-IQ/3131-IQ Omega V Long Table	DATE 2/26/07	OF 2 SHEETS

SEISMIC ANCHORAGE CALCULATION

UPPER FLOOR

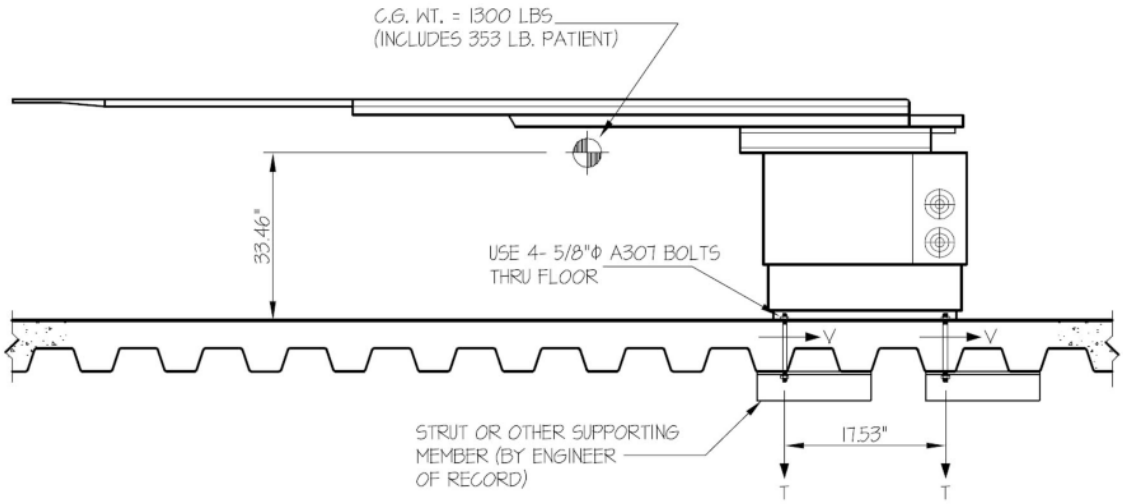

T_{MAX} = 6628 LBS/BOLT
V_{MAX} = 1584 LBS/BOLT

ELEVATION

NOTES:

1. FORCES ARE DETERMINED PER 2001 CALIFORNIA BUILDING CODE - SECTION 1632A AND HAVE BEEN FACTORED TO REPRESENT WORKING DESIGN LOADS, NOT ULTIMATE.
   HORIZONTAL FORCE (V_H) = 0.94W (C_a = .66, a_p = 1.0, I_p = 1.5, R_p = 3.0)
   VERTICAL FORCE (V_V) = 0.33(V_H)
2. CENTER OF GRAVITY (C.G.) WEIGHT IS A MAXIMUM. THIS CALCULATION ENCOMPASSES ALL WEIGHTS UP TO THE MAXIMUM WEIGHT SHOWN.
3. ARCHITECT OR STRUCTURAL ENGINEER OF RECORD SHALL PROVIDE SUPPORT STRUCTURE TO SUPPORT WEIGHTS AND FORCES SHOWN.

REGISTERED PROFESSIONAL ENGINEER
JOSEPH L. LaBRIE
No. 3566
EXP. 3-31-2008
2/26/07
STRUCTURAL
STATE OF CALIFORNIA

Illustration 9-37: Omega V Long table - Upper floor 2/2

EASE EQUIPMENT ANCHORAGE & SEISMIC ENGINEERING

GEHC PIM 5177951	DES. R. LA BRIE	SHEET 2
	JOB NO. 12-0722	
Innova 2121-IQ/3131-IQ Omega V Long Table	DATE 2/26/07	OF 2 SHEETS

SEISMIC ANCHORAGE CALCULATION

UPPER FLOOR

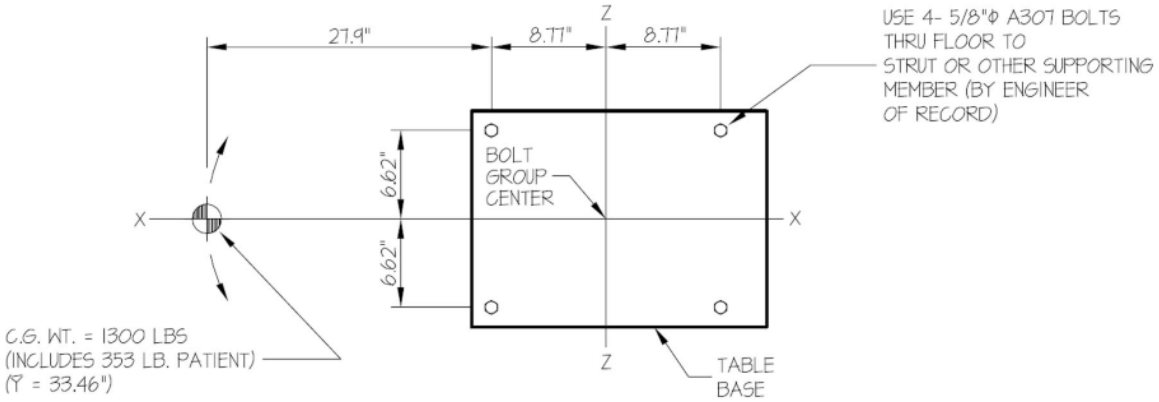

PLAN AT BASE

LOADS:

WEIGHT = 1300 LBS (INCLUDING 353 LB. PATIENT)
HORIZONTAL FORCE (V_H) = 1222 LBS
VERTICAL FORCE (V_V) = 407 LBS

BOLT FORCES:

TENSION (T)

$$T_{MAXIMUM} = \left[\frac{1222\#(33.46'')}{2\ \text{BOLTS}\ (17.53'')} \times (0.3)\right] + \frac{1222\#(33.46'')(27.9'')}{13.23''(17.53'')} + \frac{(1300\# + 407\#)(27.9'')}{2\ \text{BOLTS}\ (17.53'')} = 6628\ \text{LBS/BOLT (MAX)}$$

(HORIZ. - SIDE TO SIDE) (HORIZ. - FRONT TO BACK) (WEIGHT - V_V)

SHEAR (V)

$$V = \frac{1222\#(45.44'')}{2\ \text{BOLTS}\ (17.53'')} = 1584\ \text{LBS/BOLT (MAX)}$$

2.17 Overhead Flat Panel Suspension – Ceiling mounted

Illustration 9-38: Overhead Flat Panel Suspension 1/2

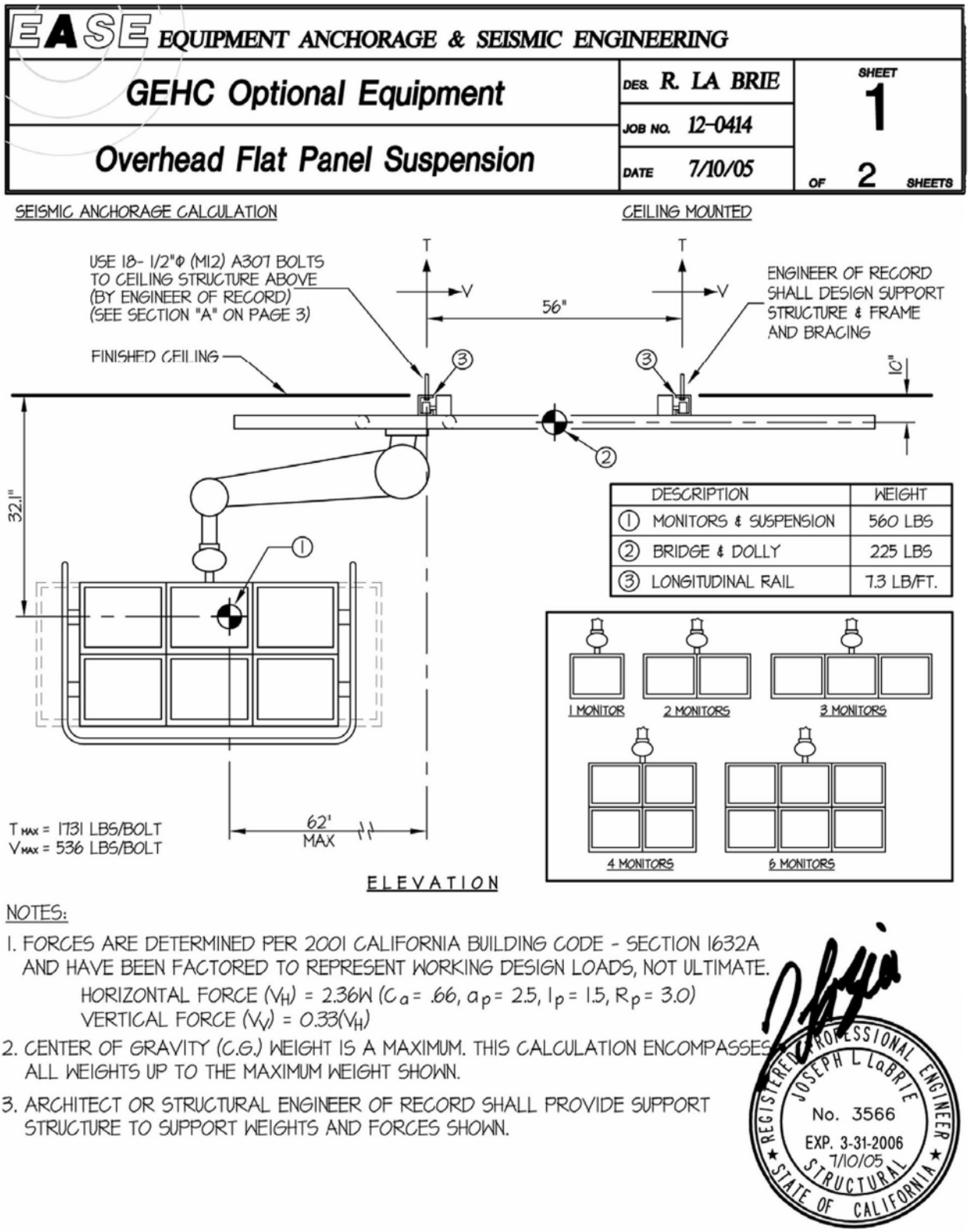

DESCRIPTION	WEIGHT
① MONITORS & SUSPENSION	560 LBS
② BRIDGE & DOLLY	225 LBS
③ LONGITUDINAL RAIL	7.3 LB/FT.

Illustration 9-39: Overhead Flat panel suspension - 2/2

EASE EQUIPMENT ANCHORAGE & SEISMIC ENGINEERING

GEHC Optional Equipment	DES. R. LA BRIE	SHEET 2
	JOB NO. 12-0414	
Overhead Flat Panel Suspension	DATE 7/10/05	OF 2 SHEETS

SEISMIC ANCHORAGE CALCULATION

CEILING MOUNTED

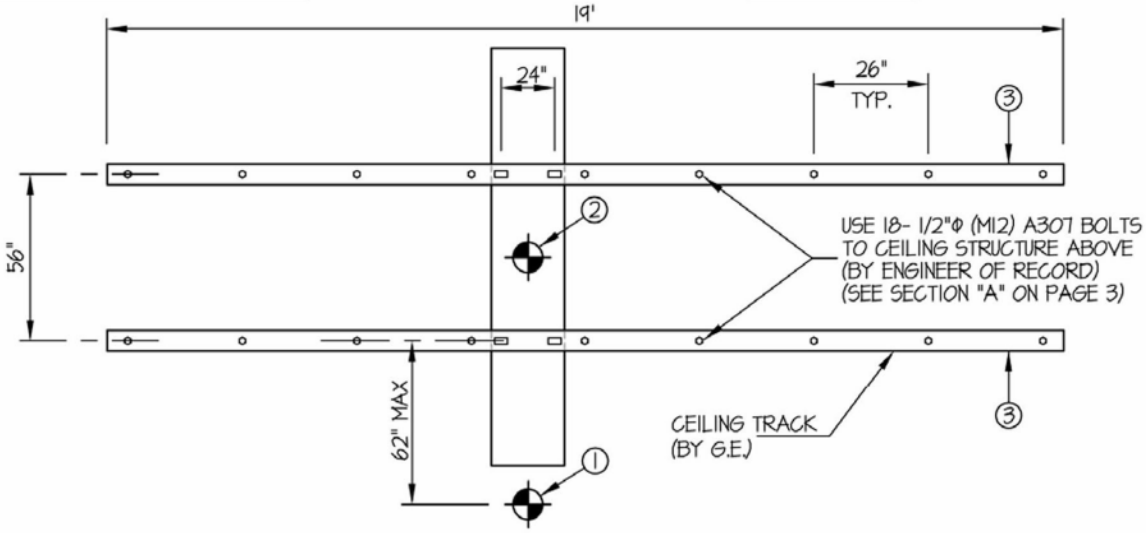

PLAN AT CEILING

LOADS:

① MONITORS & SUSPENSION
WEIGHT = 560 LBS
HORIZ. FORCE (V_H) = 1322 LBS
VERT. FORCE (V_V) = 441 LBS

② BRIDGE & DOLLY
WEIGHT = 225 LBS
HORIZ. FORCE (V_H) = 531 LBS
VERT. FORCE (V_V) = 177 LBS

③ RAILS
WEIGHT = 7.3 LB/FT.
HORIZ. FORCE (V_H) = 17.2 LB/FT.
VERT. FORCE (V_V) = 5.7 LB/FT.

BOLT FORCES:

TENSION (T)

$$T_1 = \left(\frac{[(560\# + 441\#)118"] + 1322\#(32.1")}{(56")}\right)\left(\frac{14"}{26"}\right) = 1544 \text{ LBS/BOLT}$$

$$T_2 = \left(\frac{[(225\# + 177\#)28"] + 531\#(10")}{(56")}\right)\left(\frac{14"}{26"}\right) = 159 \text{ LBS/BOLT}$$

$$T_3 = \frac{(7.3\#/FT. + 5.7\#/FT.)26"}{12"/_{\prime}} = 28 \text{ LBS/BOLT}$$

$$T = 1544\# + 159\# + 28\# = 1731 \text{ LBS/BOLT (MAX)}$$

SHEAR (V)

$$V = \frac{(1322\# + 531\#)14"}{2 \text{ BOLTS } (26")} + \frac{17.2\#/FT.(26")}{12"/FT.} = 536 \text{ LBS/BOLT (MAX)}$$

UNITY CHECK:

$$\frac{T_{ACTUAL}}{T_{ALLOW.}} + \frac{V_{ACTUAL}}{V_{ALLOW.}} = \frac{1731}{3900} + \frac{536}{1950} = .719 < 1.0 \therefore \underline{O.K.}$$

2.18 8 Monitor Flat panel Suspension - Ceiling Mounted

Illustration 9-40: 8 Monitor Flat panel Suspension - ceiling mounted 1/2

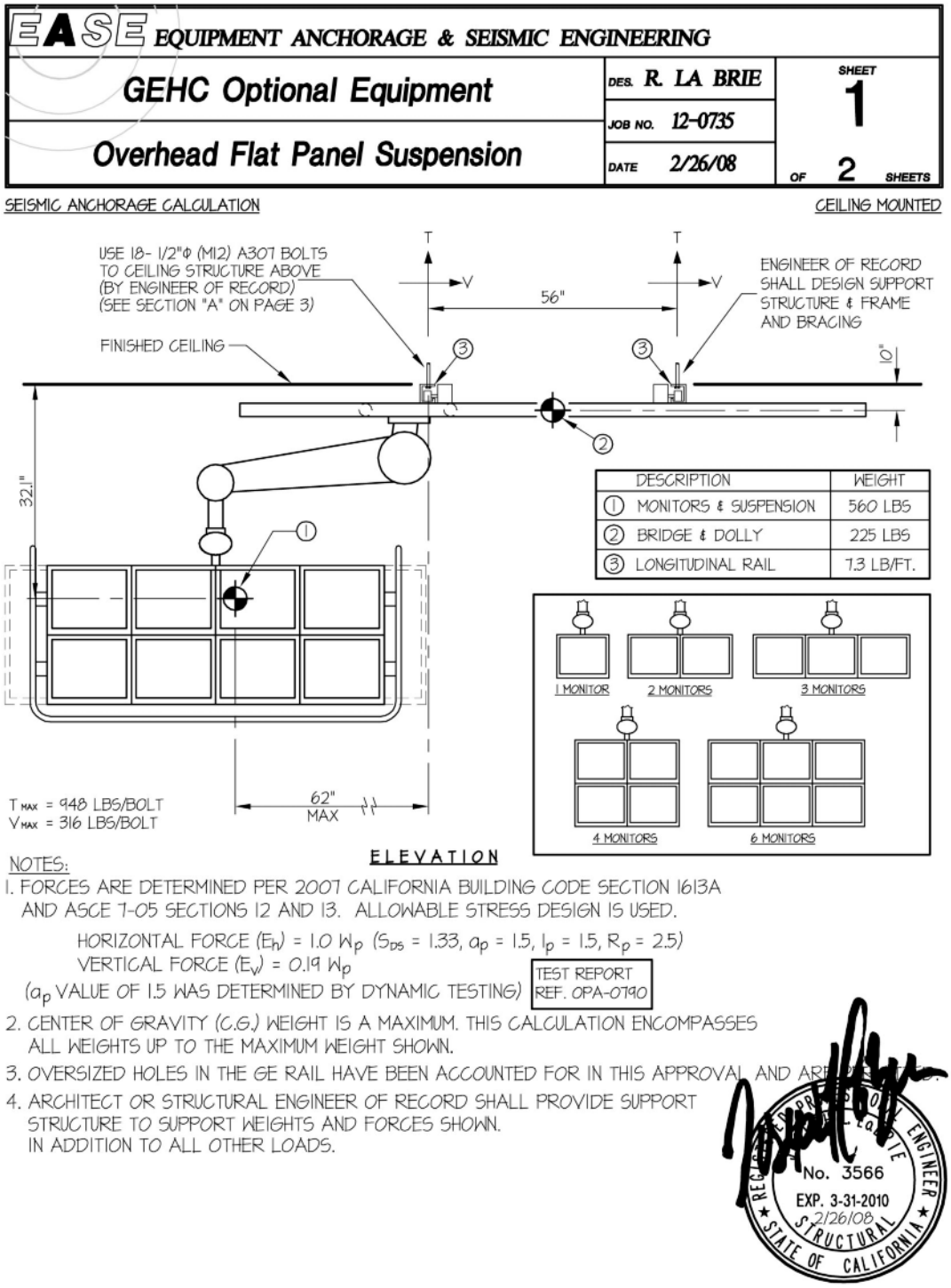

Illustration 9-41: 8 Monitor Flat panel Suspension - ceiling mounted 2/2

EASE EQUIPMENT ANCHORAGE & SEISMIC ENGINEERING

GEHC Optional Equipment	DES. R. LA BRIE	SHEET 2
	JOB NO. 12-0735	
Overhead Flat Panel Suspension	DATE 2/26/08	OF 2 SHEETS

SEISMIC ANCHORAGE CALCULATION — CEILING MOUNTED

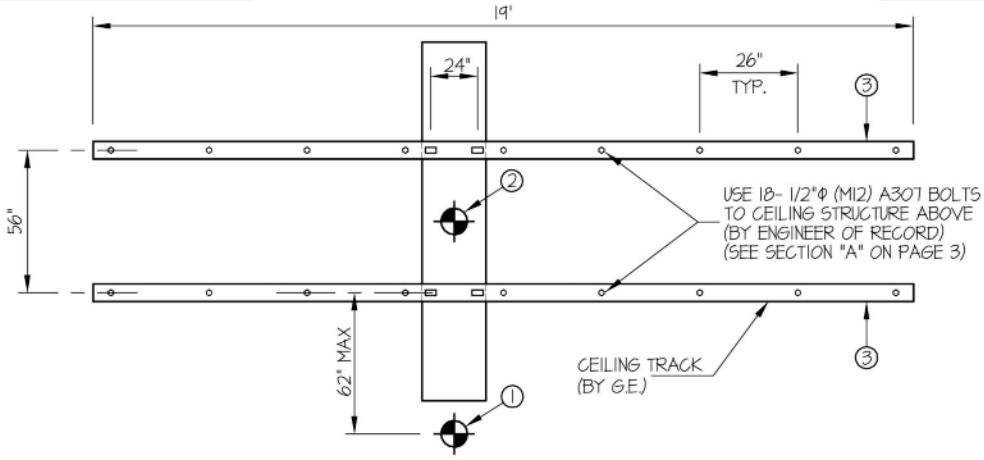

PLAN AT CEILING

LOADS:

1 MONITORS & SUSPENSION
WEIGHT = 560 LBS
HORIZONTAL FORCE (E_h) = 560 LBS
VERTICAL FORCE (E_v) = 106 LBS

2 BRIDGE & DOLLY
WEIGHT = 225 LBS
HORIZONTAL FORCE (E_h) = 225 LBS
VERTICAL FORCE (E_v) = 43 LBS

3 RAILS
WEIGHT = 7.3 LB/FT.
HORIZONTAL FORCE (E_h) = 7.3 LBS
VERTICAL FORCE (E_v) = 1.4 LBS

BOLT FORCES:

TENSION (T)

$$T_1 = \frac{560\# + 106\#}{2 \text{ BOLTS}} + \frac{560\#(32.1")}{24"} = 815 \text{ LBS/BOLT}$$

$$T_2 = \frac{225\# + 43\#}{4 \text{ BOLTS}} + \frac{225\#(10")}{2 \text{ BOLTS } (24")} = 114 \text{ LBS/BOLT}$$

$$T_3 = \frac{(7.3\#/FT. + 1.4\#/FT.)26"}{12"/FT.} = 19 \text{ LBS/BOLT}$$

$$T = 815\# + 114\# + 19\# = 948 \text{ LBS/BOLT (MAX)}$$

SHEAR (V)

$$V = \frac{560\#}{2 \text{ BOLTS}} + \frac{114\#}{4 \text{ BOLTS}} + \frac{7.3\#/FT.}{1 \text{ BOLT}}$$

$$V = 316 \text{ LBS/BOLT (MAX)}$$

UNITY CHECK:

$$\frac{T_{ACTUAL}}{T_{ALLOW.}} + \frac{V_{ACTUAL}}{V_{ALLOW.}} = \frac{948}{3900} + \frac{316}{1950} = .434 < 1.0 \therefore \text{O.K.}$$

This page left intentionally blank.

© 2010 General Electric Company.
GE Medical Systems, a General Electric Company, going to market as GE Healthcare.
283, rue de la Minière
78530, Buc
FRANCE

www.gehealthcare.com