REV	DATE	MODIFICATIONS

SITE NAME
CITY
COUNTRY

A mandatory component of this drawing set is the GE Healthcare Pre Installation manual. Failure to reference the Pre Installation manual will result in incomplete documentation required for site design and preparation.
Pre Installation documents for GE Healthcare products can be accessed on the web at: www.gehealthcare.com/siteplanning

GE Healthcare

GE Contact Name
Phone
Email

XR 6000 STARLIGHT
FINAL STUDY

Drawn by	Verified by	Concession	S.O. (GON)	PIM Manual	Rev
-	-	-	-	5549138-2EN	2

Format	Scale	File Name	Date	Sheet
A3	1:50	EN-RAD-TYP-XR6000_STARLIGHT.DWG	03/OCT/2022	01/07

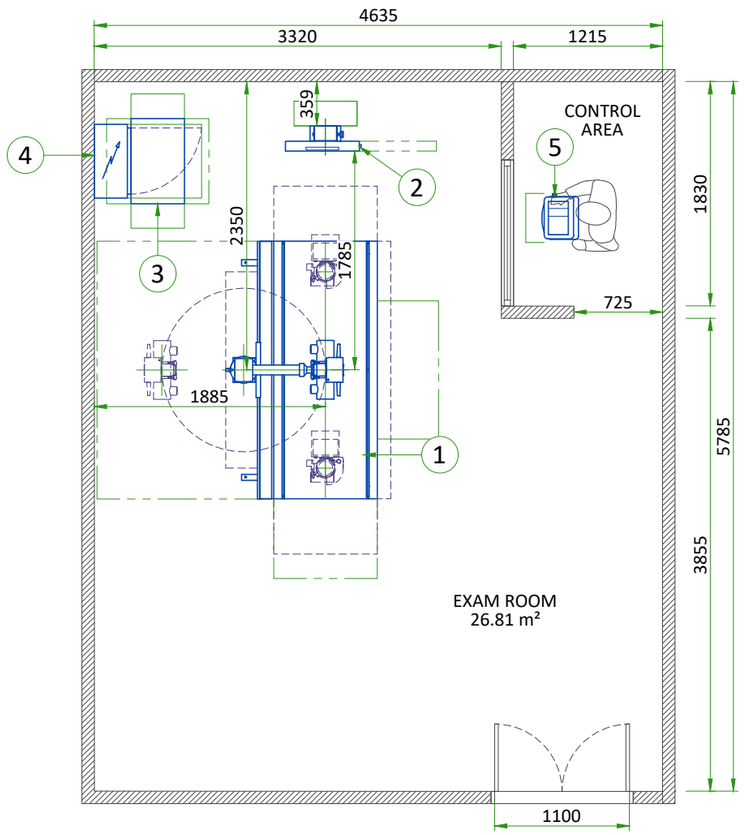

EQUIPMENT LAYOUT

ITEM	DESCRIPTION	DIMENSIONS LxWxH (mm)	WEIGHT (kg)
1	STANDARD INTEGRATED TABLE	2100x1350x2260	355
2	STANDARD WALL STAND	655x200x1900	75
3	POWER DISTRIBUTION UNIT (PDU)	716x457x589	122
4	POWER DISTRIBUTION BOX (PDB)	800x600x300	42
5	OPERATOR CONSOLE ON PEDESTAL	330x380x980	10.1

WALL - ACCORDING TO RECEIVED DRAWING

EXAM ROOM HEIGHT	
FINISHED FLOOR TO SLAB HEIGHT	-
FALSE CEILING HEIGHT	min. 2.50 m

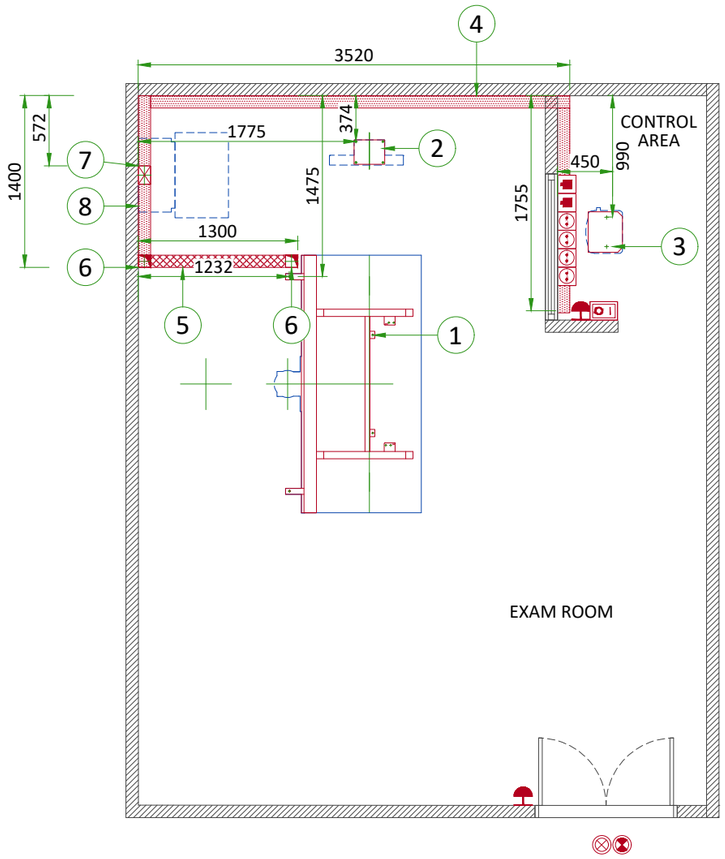

FLOOR - ELECTRICAL LAYOUT

ITEM	QTY	DESCRIPTION
1		Table anchoring (see Floor Structural Details)
2		Wall Stand anchoring (see Floor Structural Details)
3		Operator console on pedestal anchoring (see Floor Structural Details)
4		150x100 horizontal wall duct
5		100x70 flush floor duct
6		100x100 cable inlet on the floor
7		150x100 vertical duct for PDB cabling
8		Power Distribution Box (PDB)

Basic system		
	4	Additional electrical outlets: 230V 10/16A +G
	2	RJ45 network socket for the main system console
	2	System emergency off (SEO), Emergency OFF, 1.50m above floor near access doors
	1	XR ON lamp (L1) - 24V, located near access doors

	Flush floor duct
	Wall duct

FLOOR MOUNTING

TABLE AND WALLSTAND

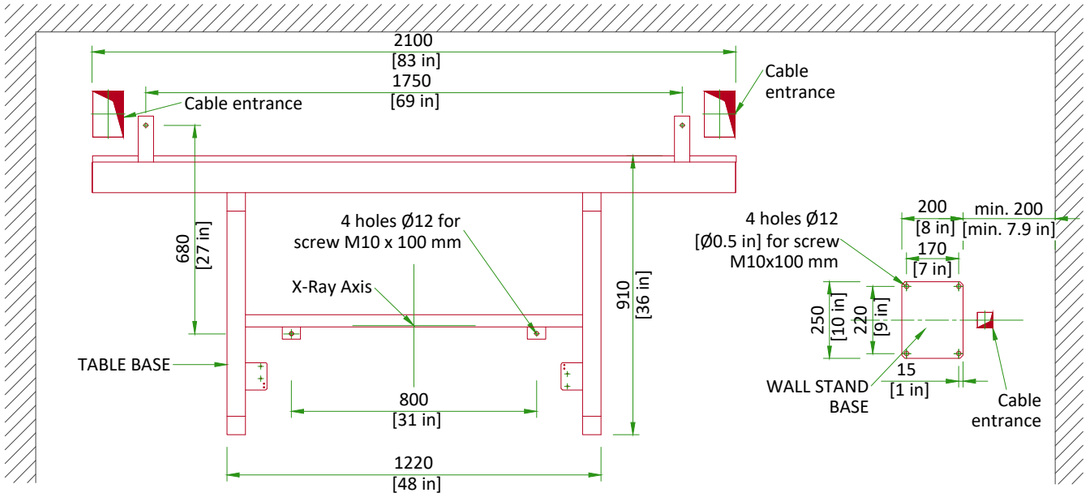

- The supplied anchors require a minimum embedment of 55 mm [2.2 in] into the concrete. If the floor thickness is less than 75 mm [3 in], it is recommended that the unit be secured using a through-bolt method with a reinforcement plate on the back side. The ground surface must be flat and leveled.
- Anchors supplied by GE.

SCALE 1:20

FLOOR MOUNTING

OPERATOR CONSOLE ON PEDESTAL

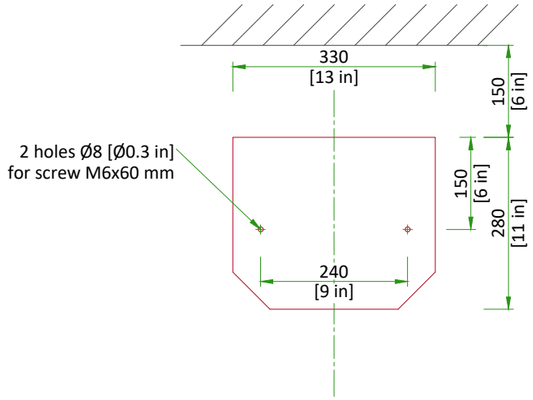

- The supplied anchors require a minimum embedment of 35 mm [1.4 in] into the concrete. If the floor thickness is less than 55 mm [2.2 in], it is recommended that the unit be secured using a through-bolt method with a reinforcement plate on the back side. The ground surface must be flat and leveled.
- Anchors supplied by GE.

SCALE 1:10

TYPICAL CABLE MANAGEMENT

FLUSH FLOOR DUCT

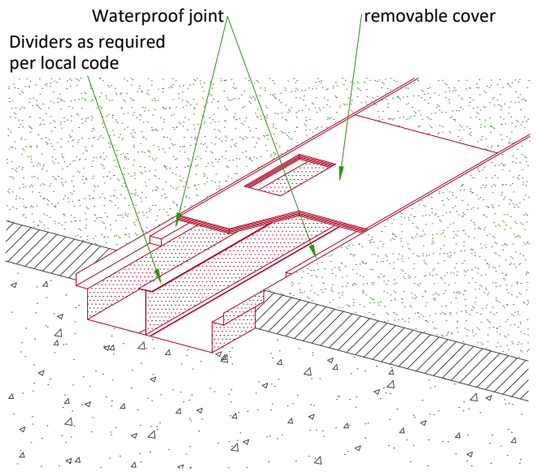

WALL DUCT

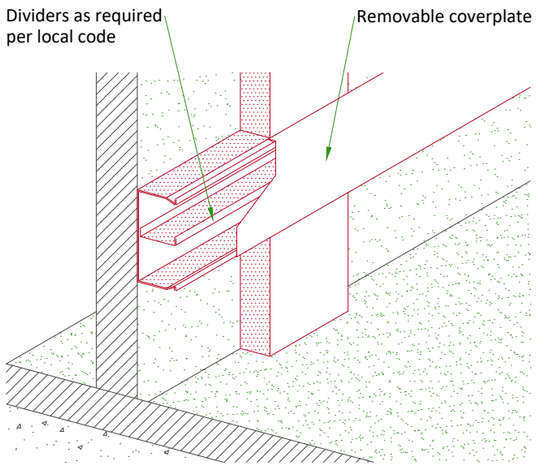

NOT TO SCALE

POWER AND NETWORK REQUIREMENTS

POWER SUPPLY	**380/400/420/440/460/480 VAC Wye 3 PHASES+G ±10%**
FREQUENCIES	**50/60 Hz ± 3 Hz**
POWER DEMAND	**70 kVA**
LINE IMPEDANCE	**380V : 0.15 Ohm / 400V : 0.16 Ohm / 420V : 0.18 Ohm**
	440V : 0.20 Ohm / 460V : 0.22 Ohm / 480V : 0.24 Ohm

- TNC neutral point connection must not be used.
- Line supply should come into a Main Disconnect Panel (MDP/PDB) containing the protective units and controls.
- The section of the supply cable should be calculated in accordance with its length and the maximum permissible voltage drops.
- There must be discrimination between supply cable protective device at the beginning of the installation (main low-voltage transformer side) and the protective devices in the MDP/PDB.

SUPPLY CHARACTERISTICS

- Power input must be separated from any others which may generate transients (elevators, air conditioning, radiology rooms equipped with high speed film changers...)
- All equipment (lighting, power outlets, etc...) installed with GE system components must be powered separately.

GROUND SYSTEM

- Equipotential: the equipotential link will be by means of an equipotential bar. This equipotential bar should be connected to the protective earth conductors in the ducts of the non GE cableways and to additional equipotential connections linking up all the conducting units in the rooms where GE units are located.

CABLES

- Power and cable installation must comply with the distribution diagram below.
- All cables must be isolated and flexible, cable color codes must comply with standards for electrical installation.
- Case PDB furnished by GE: The cables for signals and remote control (Y, SEO, L...) will go to MDP/PDB with a pigtail length of 1.5 m [4.9 ft], and will be connected during installation. Each conductor will be identified and isolated (screw connector).

CABLEWAYS

The general rules for laying cableways should meet the conditions laid down in current standards and regulations, with regard to:

- Protecting cables against water (cableways should be waterproof)
- Protecting cables against abnormal temperatures (proximity to heating pipes or ducts)
- Protecting cables against temperature shocks
- Replacing cables (cableways should be large enough for cables to be replaced)
- Metal cableways should be grounded.

NETWORK REQUIREMENTS

1 RJ 45 socket is required. The network connection is made at the Operator Console. 100BaseT network connection is preferred. 10BaseT network connection is acceptable.

POWER DISTRIBUTION

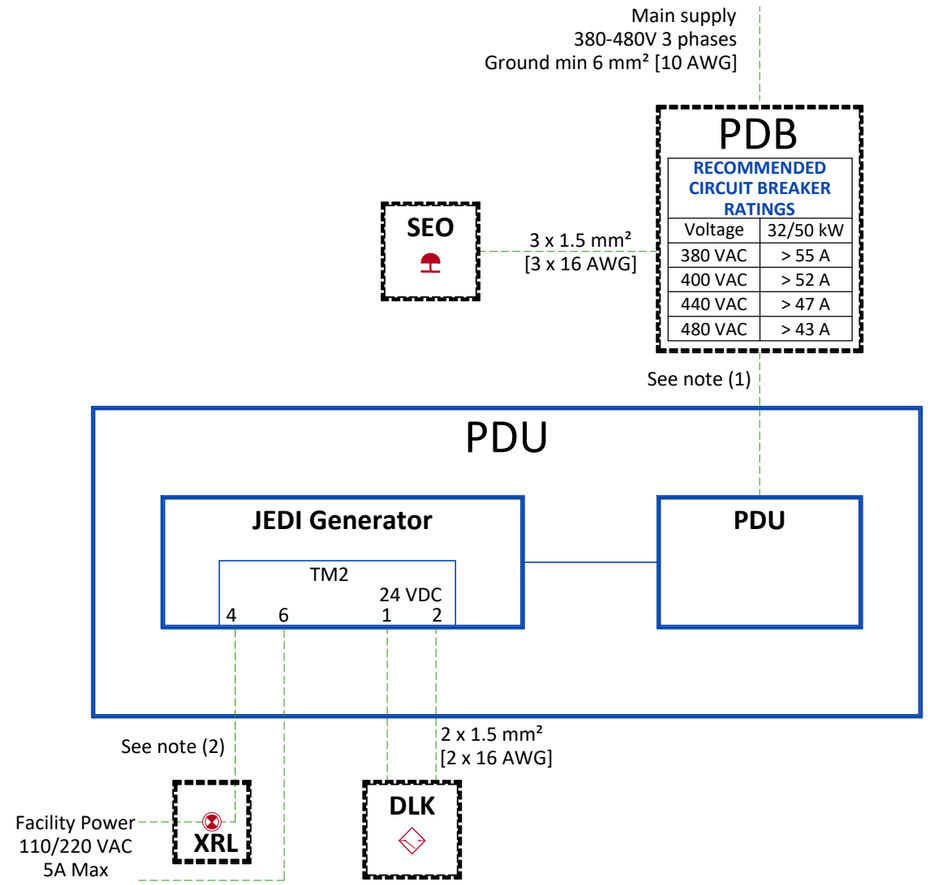

DLK	Door interlock switch (only if needed per local codes)
PDB	Power Distribution Box
PDU	Power Distribution Unit
SEO	Emergency OFF, near access doors
XRL	System ON light - 24V - Located near access doors

- Cable SUPPLIED BY CUSTOMER
- Cable SUPPLIED BY GE
- Equipment SUPPLIED BY CUSTOMER
- Equipment SUPPLIED BY GE

Notes

(1) Use only a multi conductor, shielded, PVC/PVC, UL TYPE CM cable. Alpha Wire. CQA10210637. This wire is found in GE Catalog Item A8091JH as a "bulk" roll of wire (60 Meters). Material consists of two AWG (19/0.0117 strand) conductors. Shields must be grounded at both ends. CHINA ONLY: available via from GE via part number S39222KP.

(2) Warning light grounding not shown, must comply with local codes.

INCOMING FACILITY POWER FEEDER TABLE

MIN. FEEDER WIRE SIZE, AWG OR MCM (sq. mm)/VAC	MINIMUM FEEDER WIRE LENGTH - ft (m)							
	50 (15)	100 (30)	150 (46)	200 (60)				
32 kW 380 VAC	8 (10)	6 (16)	6 (16)	5 (22)				
50 kW 380-480 VAC	8 (10)	6 (16)	4 (22)	3 (30)				

GENERAL NOTES

In all cases qualified personnel must verify that the feeder (at the point of take-off) and the run to the GE system meet all the requirements stated in the PIM. If the wire size does not match the above lists, please select the nearest wire size as per to local standards.

Grounding conductor will be of the same size as the feeder. This ground will run from the equipment back to the power source/main grounding point and always travel in the same conduit with the feeders

TEMPERATURE AND HUMIDITY SPECIFICATIONS

IN-USE CONDITIONS

	EXAM ROOM		CONTROL ROOM	
Temperature	Min	Max	Min	Max
	10 °C [50 °F]	40 °C [104 °F]	10 °C [50 °F]	40 °C [104 °F]
Temperature gradient	**< 10 °C/h [< 50 °F/h]**		**< 10 °C/h [< 50 °F/h]**	
Relative humidity (1)	30% to 80%		30% to 80%	
Humidity gradient	**< 30%/h**		**< 30%/h**	
System heat dissipation	Idle	Max	Idle	Max
	0.725 kW	2.480 kW	0.006 kW	0.020 kW
	2474 BTU/hr	8462 BTU/hr	20 BTU/hr	68 BTU/hr

STORAGE CONDITIONS

Temperature	-20 °C [-4 °F] to 70 °C [158 °F]
Relative humidity (1)	20% to 90%
Temperature gradient	**< 20 °C/h [< 68 °F/h]**
Humidity gradient	**< 30%/h**

STORAGE values only refer to equipment that is still in shipping containers. If the equipment is partially or completely installed, refer to IN-USE values.

Material should not be stored for more than 90 days.
(1) non-condensing

AIR RENEWAL

According to local standards.

NOTE
In case of using air conditioning systems that have a risk of water leakage it is recommended not to install it above electric equipment or to take measures to protect the equipment from dropping water.

INTERCONNECTIONS

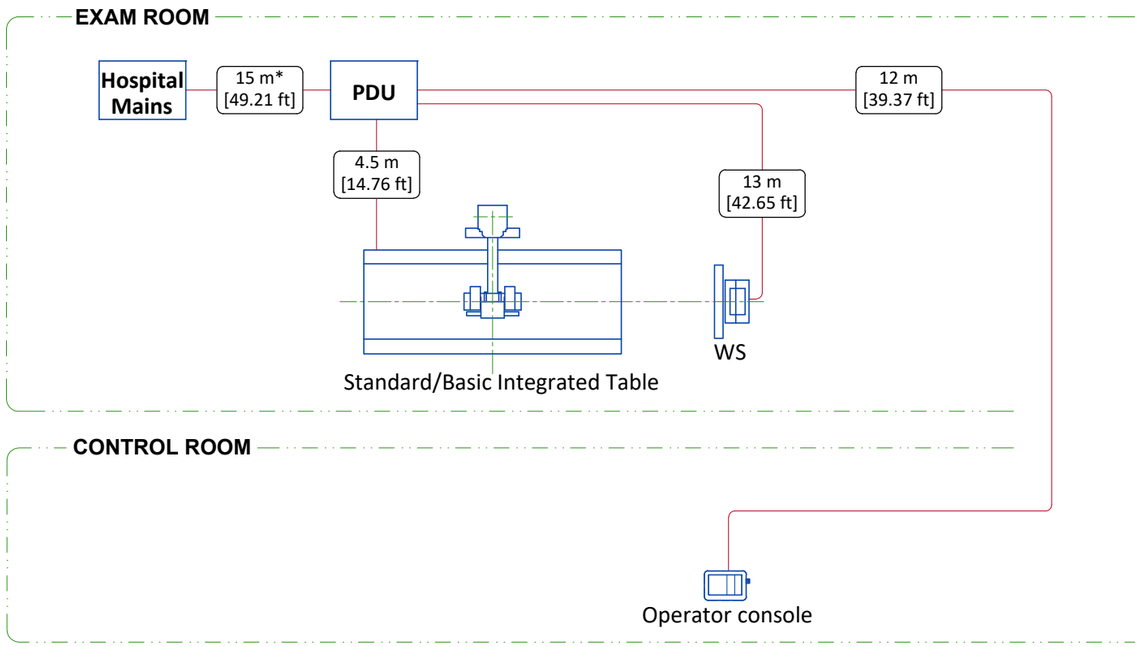

* - optional cable S39222KP

ENVIRONMENTAL SPECIFICATIONS

MAGNETIC INTERFERENCE

To guarantee specified imaging performance:
X-ray tubes and control console equipment must be located in ambient static field of less than 10 Gauss.

ACOUSTIC OUTPUT

Measured 1 m [3.28 ft] from any point in system.
In-use: less than 65 dBA
Stand-by: less than 55 dBA

DELIVERY

THE CUSTOMER/CONTRACTOR SHOULD:

- Provide an area adjacent to the installation site for delivery and unloading of the GE equipment.
- Ensure that the dimensions of all doors, corridors, ceiling heights are sufficient to accommodate the movement of GE equipment from the delivery area into the definitive installation room.
- Ensure that access routes for equipment will accommodate the weights of the equipment and any transportation, lifting and rigging equipment.
- Ensure that all necessary arrangements for stopping and unloading on public or private property not belonging to the customer have been made.

DIMENSIONS			
	SYSTEM	STANDARD WALL STAND	BASIC WALL STAND
LENGTH (mm)	2500	2000	2000
WIDTH (mm)	1250	700	700
HEIGHT (mm)	1000	400	400
GROSS WEIGHT (kg)	682	117	109
LENGTH (in)	98.4	78.7	78.7
WIDTH (in)	49.2	27.6	27.6
HEIGHT (in)	39.4	15.7	15.7
GROSS WEIGHT (lb)	1504	258	240

Shipping boxes are included.

DISCLAIMER

GENERAL SPECIFICATIONS

- GE is not responsible for the installation of developers and associated equipment, lighting, cassette trays and protective screens or derivatives not mentioned in the order.
- The final study contains recommendations for the location of GE equipment and associated devices, electrical wiring and room arrangements. When preparing the study, every effort has been made to consider every aspect of the actual equipment expected to be installed.
- The layout of the equipment offered by GE, the dimensions given for the premises, the details provided for the pre-installation work and electrical power supply are given according to the information noted during on-site study and the wishes expressed by the customer.
- The room dimensions used to create the equipment layout may originate from a previous layout and may not be accurate as they may not have been verified on site. GE cannot take any responsibility for errors due to lack of information.
- Dimensions apply to finished surfaces of the room.
- Actual configuration may differ from options presented in some typical views or tables.
- If this set of final drawings has been approved by the customer, any subsequent modification of the site must be subject to further investigation by GE about the feasibility of installing the equipment. Any reservations must be noted.
- The equipment layout indicates the placement and interconnection of the indicated equipment components. There may be local requirements that could impact the placement of these components. It remains the customer's responsibility to ensure that the site and final equipment placement complies with all applicable local requirements.
- All work required to install GE equipment must be carried out in compliance with the building regulations and the safety standards of legal force in the country concerned.
- These drawings are not to be used for actual construction purposes. The company cannot take responsibility for any damage resulting therefrom.

CUSTOMER RESPONSIBILITIES

- It is the responsibility of the customer to prepare the site in accordance with the specifications stated in the final study. A detailed site readiness checklist is provided by GE. It is the responsibility of the customer to ensure all requirements are fulfilled and that the site conforms to all specifications defined in the checklist and final study. The GE Project Manager of Installation (PMI) will work in cooperation with the customer to follow up and ensure that actions in the checklist are complete, and if necessary, will aid in the rescheduling of the delivery and installation date.
- Prior to installation, a structrual engineer of record must ensure that the floor and ceiling is designed in such a way that the loads of the installed system can be securely borne and transferred. The layout of additional structural elements, dimensioning and the selection of appropriate installation methods are the sole responsibility of the structural engineer. Execution of load bearing structures supporting equipment on the ceiling, floor or walls are the customer's responsibility.

RADIO-PROTECTION

- Suitable radiological protection must be determined by a qualified radiological physicist in conformation with local regulations. GE does not take responsibility for the specification or provision of radio-protection.

THE UNDERSIGNED, HEREBY CERTIFIES THAT I HAVE READ AND APPROVED THE PLANS IN THIS DOCUMENT.		
DATE	NAME	SIGNATURE

CUSTOMER SITE READINESS REQUIREMENTS

REQUIRED MANUALS FOR SYSTEM PRE-INSTALLATION	
Description	Document Number*
Product specific Pre-installation Manual	Refer to cover page
*documents can be accessed in multiple languages at *https://customer-doc.cloud.gehealthcare.com/#/cdp/dashboard*	

- A mandatory component of this drawing set is the GE Healthcare Pre-installation manual. Failure to reference the Pre-installation manual will result in incomplete documentation required for site design and preparation.
- The items on the GE Healthcare Site Readiness Checklist **DOC1809666** are REQUIRED to facilitate equipment delivery to the site. Equipment will not be delivered if these requirements are not satisfied.
  - Any deviation from these drawings must be communicated in writing to and reviewed by your local GE Healthcare installation project manager prior to making changes.
  - Make arrangements for any rigging, special handling, or facility modifications that must be made to deliver the equipment to the installation site. If desired, your local GE Healthcare installation project manager can supply a reference list of rigging contractors.
  - New construction requires the following;
    1. Secure area for equipment,
    2. Power for drills and other test equipment,
    3. Restrooms.
  - Provide for refuse removal and disposal (e.g. crates, cartons, packing)
  - For CT systems it is required to minimize vibrations within the scan room. It is the customer's responsibility to contract a vibration consultant/engineer to implement site design modifications to meet the GE vibration specification. Refer to the system Pre-installation manual for vibration specifications.