suinsa
medical systems s.a.

*Technical Publication*

*PIM-S0015067*

*Revision 4*

# *PRE INSTALLATION MANUAL*

# FLEXI-DT

# DIGITAL TABLE

This product bears a CE marking in accordance with the provisions of Directives 93/42/ECC

SUINSA Medical Systems S.A.

C/ Primavera, 39. Polígono Industrial “Las Monjas”

Torrejón de Ardoz 28850 MADRID—ESPAÑA

Tel: + 34 91 655 95 00

Fax: + 34 91 675 52 53

e-mail address: suinsa@suinsa.com

Website: www.suinsa.com

# TABLE OF CONTENTS

**REVISION HISTORY 5**

**PRELIMINARY IMPORTANT PRECAUTIONS 7**

ADVISORY SYMBOLS 7

LANGUAGE 9

WARNING X-RAY EQUIPMENT 10

EMC PRECAUTIONS 11

RADIO FREQUENCY INTERFERENCES 11

CERTIFIED ELECTRICAL CONTRACTOR STATEMENT 12

STANDARDS 12

HEAD QUARTERS 13

DAMAGE IN TRANSPORTATION 13

RECYCLING 14

**CHAPTER 1. INTRODUCTION 15**

1.1. PURPOSE AND SCOPE OF THIS MANUAL 15

1.2. PURCHASER RESPONSIBILITY 15

1.3. GENERAL SECURITY PRECAUTIONS 17

1.4. PRE-INSTALLATION TOOLS AND TEST EQUIPMENT 18

**CHAPTER 2. EQUIPMENT DESCRIPTION 19**

2.1. PRODUCT IDENTIFICATION 19

2.2. EQUIPMENT DESCRIPTION 19

2.3. PARTS OF THE EQUIPMENT 20

2.4. TABLE CONVENTIONS 21

**CHAPTER 3. EQUIPMENT SPECIFICATIONS 23**

3.1. ENVIRONMENTAL REQUIREMENTS 23

3.2. DIMENSIONS AND PRODUCT WEIGHT 23
3.3. CRATE DIMENSIONS 24
3.4. ELECTRICAL REQUIREMENTS 24
3.5. EQUIPMENT CLASSIFICATION 25
3.6. LABELLING 26
3.7. DRAWINGS 27
**CHAPTER 4. ROOM SPECIFICATIONS 29**
4.1. CONSIDERATIONS 29
4.1.1. RADIATION PROTECTION 29
4.1.2. SERVICE ACCESS 29
4.1.3. CLINICAL ACCESS 29
4.1.4. PERIPHERAL EQUIPMENT 30
4.2. ENVIRONMENTAL REQUIREMENTS 30
4.3. ELECTRO MAGNETIC COMPATIBILITY 30
4.4. STRUCTURAL REQUIREMENTS 31
4.4.1. MINIMUM DOOR SIZE 31
4.4.2. CEILING REQUIREMENTS 31
4.4.3. WALL REQUIREMENTS 31
4.4.4. FLOOR REQUIREMENTS 31
4.5. ELECTRICAL REQUIREMENTS 32
4.6. ROOM DIMENSIONS 32
4.7. TYPICAL ROOM LAYOUTS 32
4.8. DRAWINGS 33

# REVISION HISTORY

| *REVISION* | *DATE* | *REASON FOR CHANGE* |
|---|---|---|
| 0 | 30/06/2005 | FIRST EDITION |
| 1 | 07/09/2005 | CSA Standard Updated.<br>Current value updated |
| 2 | 17/02/2006 | Updates |
| 3 b | 15/03/2006 | Updates |
| 4 | 01/12/2006 | Updates |
| | | |
| | | |
| | | |
| | | |

BLANK PAGE

# PRELIMINARY IMPORTANT PRECAUTIONS

## ADVISORY SYMBOLS

Please pay attention messages containing a DANGER, WARNING, CAUTION or NOTE symbol. This are symbols used in SUINSA manuals with next meanings:

***DANGERS ADVISE OF CONDITIONS OR SITUATIONS THAT IF NOT HEEDED OR AVOIDED WILL CAUSE SERIOUS PERSONAL INJURY OR DEATH***

***WARNINGS ADVISE OF CONDITIONS OR SITUATIONS THAT IF NOT HEEDED OR AVOIDED COULD CAUSE SERIOUS PERSONAL INJURY OR CATASTROPHIC DAMAGE OF EQUIPMENT OR DATA***

***Cautions advise of conditions or situations that if not needed or avoided could cause personal injury or damage to equipment or data.***

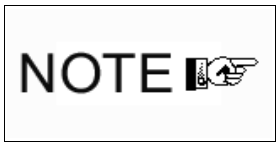


*Notes alert to pertinent facts and condition. Notes represent information that is important to know but which do not necessarily relate to possible injury or damage to equipment.*

The following are examples of some of the warning labels that may be found on Suinsa products:

Warning label. Indicates a specific warning if displayed in conjunction with warning text.

High voltage warning label. Indicates the presence of high voltage

ESD warning label. Indicates the presence of Electrostatic Discharge Sensitive Devices.

RF interference. Indicates that RF interference may occur in the vicinity of equipment marked with this symbol.

Pitch Point Area. Indicates where operator should never position any portion of his/her body in the pinch point area; the possibility of severe injury or death that could occur if these warnings are ignored

Red Emergency Stop. Turn following the arrows to unlock the system stop.

Radiation. Danger

According to the type of protection against electric shock TYPE B

This symbol indicates that the waste of electrical and electronic equipment must not be disposed as unsorted municipal waste and must be collected separately. Please contact an authorized representative of the manufacturer for information concerning the decommissioning of your equipment

# LANGUAGE

| | |
|---|---|
| WARNING | ***THIS MANUAL IS AVAILABLE IN ENGLISH ONLY.***<br>***IF A CUSTOMER'S SERVICE PROVIDER REQUIRES OTHER LANGUAGE THAN ENGLISH, IT IS THE CUSTOMER'S RESPONSIBILITY TO PROVIDE TRANSLATION SERVICES.***<br>***DO NOT ATTEMPT TO MAKE THE EQUIPMENT PRE-INSTALLATION WORK UNLESS THIS MANUAL HAS BEEN CONSULTED AND IS UNDERSTOOD.***<br>***FAILURE TO HEED THIS WARNING MAY RESULT IN INJURY TO THE SERVICE PROVIDER, OPERATOR OR PATIENT FROM ELECTRIC SHOCK, MECHANICAL OR OTHER HAZARDS.*** |
| WARNING<br>***AVERTISSEMENT*** | ***CE MANUEL N'EST DISPONIBLE QUIEN ANGLAIS.***<br>***SI LE TECHNICIEN DU CLIENT A BESOIN DE CE MANUEL DANS UNE AUTRE LANGUE QUE L'ANGLAIS, C'EST AU CLIENT QU'IL INCOMBE DE LE FAIRE TRADUIRE.***<br>***NE PAS TENTER DU FAIRE LE PRE-INSTALLATION TRAVAIL SUR LES ÉQUIPMENTS TANT QUE LE O MANUEL N'A PAS ÉTÉ CONSULTÉ ET COMPRIS.***<br>***LE NON-RESPECT DE CET AVERTISSEMENT PEUT ENTRAÍNER CHEZ LE TECHNICIEN, L'OPÉRATEUR OU LE PATIENT DES BLESSURES DUES Á DES DANGERS ÉLECTRIQUES, MÉCANIQUES OU AUTRES.*** |
| WARNING<br>***WARNUNG*** | ***DIESES-HANDBUCH EXISTIERT NUR IN ENGLISCHER SPRACHE.***<br>***FALLS EIN FREMDER KUNDENDIENST EINE ANDERE SPRACHE BENÖTIGT, IST ES AUFGABE DES KUNDEN FÜR EINE ENTSPRECHENDE ÜBERSETZUNG ZU SORGEN.***<br>***VERSUCHEN SIE NICHT, DAS GERÁT ZU VORINSTALLATION ARBEIT BILDEN, BEVOR DIESES-HANDBUCH NICHT ZU RATE GEZOGEN UND VERSTANDEN WURDE.***<br>***WIRD DIESE WARNUNG NICHT BEACHTET, SO KANN ES ZU VERLETZUNGEN DES KUNDENDIENSTTECHNIKERS, DES BEDIENERS ODER DES PATIENTEN DURCH ELEKTRISCHE.*** |
| WARNING<br>***AVISO*** | ***ESTE MANUAL SÓLO EXISTE EN INGLÉS.***<br>***SI ALGÚN PROVEEDOR DE SERVICIOS AJENO SOLICITA UN IDIOMA QUE NO SEA EL INGLÉS, ES RESPONSABILIDAD DEL CLIENTE OFRECER UN SERVICIO DE TRADUCCIÓN.***<br>***NO SE DEBERÁN HACER LOS TRABAJOS DE PREINSTALACION, SIN HABER CONSULTADO Y COMPRENDIDO ESTE MANUAL.***<br>***LA NO OBSERVANCIA DEL PRESENTE AVISO PUEDE DAR LUGAR A QUE EL PROVEEDOR DE SERVICIOS, EL OPERADOR O EL PACIENTE SUFRAN LESIONES PROVOCADAS POR CAUSAS ELÉCTRICAS, MECÁNICAS Ó DE OTRA NATURALEZA.*** |

# WARNING X-RAY EQUIPMENT

*X-RAY EQUIPMENT IS DANGEROUS TO BOTH PATIENT AND OPERATOR UNLESS MEASURES OF PROTECTION ARE STRICTLY OBSERVED*

Though this equipment is built to the highest standards of electrical and mechanical safety, the useful x-ray beam becomes a source of danger in the hands of the unauthorized or unqualified operator. Excessive exposure to x-radiation causes damage to human tissue.

Therefore, adequate precautions must be taken to prevent unauthorized or unqualified persons from operating this equipment or exposing themselves or others to its radiation.

Before operation, persons qualified and authorized to operate this equipment should be familiar with the Recommendations of the International Commission on Radiological Protection, contained in Annals Number 26 of the IRCP, and with applicable national standards.

# EMC PRECAUTIONS

## RADIO FREQUENCY INTERFERENCES

This equipment generates, uses, and can radiate radio frequency energy. The equipment may cause radio frequency interference to other medical or non medical devices and radio communications. To provide reasonable protection against such interference, this product complies with emissions limits for a Group 1, class A Medical Devices Directive as stated in EN 60601-1-2. However, there is no guarantee that interference will not occur in a particular installation.

If this equipment is found to cause interference (which may be determined by turning the equipment on and off), the user (or qualified service personnel) should attempt to correct the problem by one or more of the following measure (s):

- reorient or relocate the affected device (s),
- increase the separation between the equipment and the affected device,
- power the equipment from a source different from that of the affected device,
- consult the point of purchase or service representative for further suggestions.

To comply with the regulations on electromagnetic interference for a Class A FCC Device, this equipment must be used in shielded areas and all interconnect cables to peripheral devices must be shielded and properly grounded. Use of cables not properly shielded and grounded may result in the equipment causing radio frequency interference in violation of the FCC regulations.

NOTE

*It is customer's responsibility to assure that this equipment and vicinity equipment complies the value of radio frequency interferences shown in General Regulation for safety acc. IEC 60601-1-2 tables. See service manual or user manual.*

# CERTIFIED ELECTRICAL CONTRACTOR STATEMENT

All electrical installations that are preliminary to positioning of the equipment at the site prepared for the equipment will be performed by licensed electrical contractors. In addition, electrical feeds into the Power Distribution Unit will be performed by licensed electrical contractors. Other connections between pieces of electrical equipment, calibrations, and testing will be performed by qualified SUINSA personnel. The products involved (and the accompanying electrical installations) are highly sophisticated, and special engineering competence is required. In performing all electrical work on these products, SUINSA will use its own specially trained field engineers. All of SUINSA electrical work on these products will comply with the requirements of the applicable electrical codes.

The purchaser of SUINSA equipment will only utilize qualified personnel (i.e., SUINSA field engineers, personnel of third-party service companies with equivalent training or licensed electricians) to perform electrical servicing on the equipment.

# STANDARDS

This product complies with the safety regulatory requirements of the following standards:

- Council Directive 93/42/EEC concerning medical devices.

The CE marking label affixed to the product testifies compliance to the Directive.

This product complies with the safety regulatory requirements of the following regulations:

- UNE-EN 60601-1
- UNE-EN-ISO 14971
- CAN/CSA-C22.2 60601-1
- UL Std No 2601.1

The manufacturer SUINSA Medical Systems is ISO 9001-2000 and EN 13485 certified.

# HEAD QUARTERS


- SUINSA Medical Systems S.A.
- C/ Primavera, 39. Polígono Industrial “Las Monjas”
- Torrejón de Ardoz 28850 MADRID—ESPAÑA
- Tel: + 34 91 655 95 00
- Fax: + 34 91 675 52 53
- e-mail address: suinsa@suinsa.com
- Website: www.suinsa.com


# DAMAGE IN TRANSPORTATION

All packages should be closely examined at time of delivery. If damage is apparent, have notation "damage in shipment" written on all copies of the freight or express bill before delivery is accepted or "signed for" by a SUINSA or an Hospital receiving agent. whether notes or concealed, damage MUST be reported to the carrier immediately upon discovery, or in any event, within 14 days after receipt, and the contents and containers held for inspection by the carrier.

# RECYCLING

*MACHINES OR ACCESSORIES AT END-OF-LIFE:*

The elimination of machines and accessories must be in accordance with national regulations for waste processing. All materials and components that could pose a risk to the environment must be removed from the end-of-life machines and accessories (example: dry and wet cell batteries, transformer oil, etc…).

*PACKING MATERIALS:*

The materials used to pack our equipment are recyclable. They must be collected and processed in accordance with the regulations in force for the country where the machines or accessories are unpacked.

# CHAPTER 1. INTRODUCTION

## 1.1. PURPOSE AND SCOPE OF THIS MANUAL

This manual provides a sequential listing of tasks and procedures for the PRE-INSTALLATION of the digital table FLEXI-DT.

## 1.2. PURCHASER RESPONSIBILITY

The purchaser is responsible of the use, pre-installation and service work, and of costs of alterations and modifications when not specifically provided in the sales contract.

Delay, confusion and waste of manpower can be avoided by adequate Service and Pre-installation.

Service refers to work necessary to check installation site of X-ray equipment, either a complete system or a part to be added to an existing X-Ray room.

User refers to utilization of machine.

Pre-installation work, includes:

- Provision of suitable support structure in the floor, walls or ceiling as necessary for the mounting of the product and components and procurement of required materials
- Installation of required materials before the delivery of system components
- Room lighting.
- Power supply of the required voltage including an emergency-off safety switch in the room.
- Installation of junction boxes of proper size including covers and fittings and locations required by the installation plan.
- Installation of non- electric services.
- Installation of room environment control equipment

- Provision in the room of doors of adequate size for the entry of product and components.

NOTE

*Electrical schematics, bill of materials, descriptions, calibration instructions and other information will be provide on demand.*

NOTE

*The provider will give the information necessary to help the qualified staff of the user repair the equipment parts designated by the manufacturer as repairable.*

NOTE

*Electrical connections, calibrations and test will be performed by qualified personnel.*

# 1.3. GENERAL SECURITY PRECAUTIONS

Take note of the next advices and security symbols

***CAUTION. This equipment may cause radio frequency interference.***

***THE PROPER USE AND THE SECURE OPERATION PRACTICES WITH X-RAY GENERATOR ARE UNDER THE RESPONSIBILITY OF THE USERS OF SUCH GENERATORS. SUINSA MEDICAL SYSTEMS PROVIDES INFORMATION ABOUT THEIR PRODUCTS AND ASSOCIATED RISKS, BUT DOES NOT ACCEPT ANY RESPONSIBILITY RELATED TO OPERATION AND SECURE PRACTICES AFTER SALE.***

***SUINSA MEDICAL SYSTEMS DOES NOT ACCEPT ANY RESPONSIBILITY ABOUT ANY EQUIPMENT THAT HAS NOT BEEN PRE-INSTALLED, USED, MAINTAINED OR REPAIRED ACCORDING TO THE PRE-INSTALLATION, SERVICE OR USER MANUAL, NEITHER ABOUT EQUIPMENTS THAT HAVE BEEN MODIFIED IN ANY WAY.***

***NEVER OPERATE THIS EQUIPMENT IN ZONES WHERE A RISK OF EXPLOSION CAN TAKE PLACE. SOAPS AND DISINFECTANTS, INCLUDED THOSE USED IN PATIENTS, CAN CREATE EXPLOSIVE GAS MIXTURES. PLEASE, OBSERVE THE CORRESPONDENT NORMATIVE.***

***DO NOT PLACE LIQUIDS ON THE EQUIPMENT.***

***DO NOT MAKE THE EQUIPMENT TO WORK UNDER DIRECT SOLAR LIGHT OR NEXT TO HEAT SOURCES.***

***DO NOT MAKE THE EQUIPMENT TO WORK UNDER HIGH MAGNETIC FIELDS (MICROWAVES, AMPLIFIERS, ETC) AND ALSO AVOID TO PASS THE WIRES NEXT TO THIS DEVICES.***

***THE EQUIPMENT CAN ONLY BE OPENED BY MAINTENANCE OPERATORS WITH THE SPECIFIC FORMATION.***

## 1.4. PRE-INSTALLATION TOOLS AND TEST EQUIPMENT

The following list summarizes the tools and test equipment needed to install and adjust the equipment.

In addition to the standard serviceman's tools the following items may be required.

- Wrench set.
- Digital multimeter.
- 4 ft level. (or two standard levels.)

# CHAPTER 2. EQUIPMENT DESCRIPTION

## 2.1. PRODUCT IDENTIFICATION

| ***BASIC PRODUCT*** | | |
|---|---|---|
| PRODUCT NAME | PART NUMBER | DESCRIPTION |
| FLEXI-DT | **S0014115** | DIGITAL TABLE |
| ***OPTIONS*** | | |
| HANDGRIPS | **S0013417** | HANDGRIPS.<br>All x-ray exposures must be taken with patient hold on to this handgrips. |
| COMPRESSION BANDS | **S0013418** | COMPRESSION BANDS |
| DOUBLE PEDALS | **S0015080** | ADDITIONAL ROW OF PEDALS |
| LATERAL CASSETTE HOLDER | **S0001768** | OPTIONAL LATERAL CASSETTE HOLDER |
| REMOTE RF CONTROL | **S0015379** | OPTIONAL RF REMOTE CONTROL |
| SWAP KIT | **S0015311** | OPTIONAL FLOOR EXTENSION<br>(for fitting with old digital table floor preparation) |

## 2.2. EQUIPMENT DESCRIPTION

FLEXI-DT is a mobile elevating table for medical diagnostic, allowing an easy and quick positioning for all type of patients.

FLEXI-DT can be used for tomography applications with the appropriate choice of X Ray tube, generator and tube support.

## 2.3. PARTS OF THE EQUIPMENT

As shown, the FLEXI-DT is composed by:

1. ELEVATING BASE
2. TABLETOP
3. CONTROL PANEL
4. EMERGENCY STOP
5. WHEELS
6. WHEEL BRAKES
7. PINS
8. PIN LODGING
9. SAFETY LOCKS
10. PEDALS
11. IR DEVICE

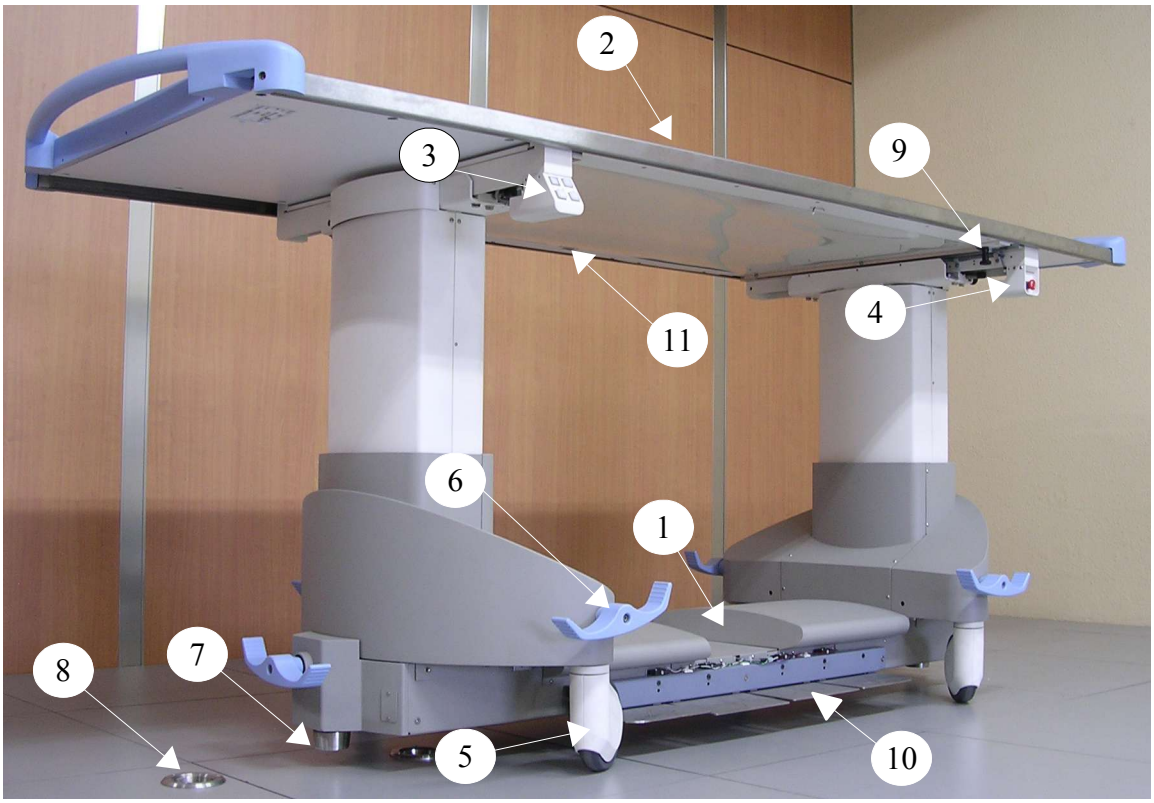


*Figure 1*

## 2.4. TABLE CONVENTIONS

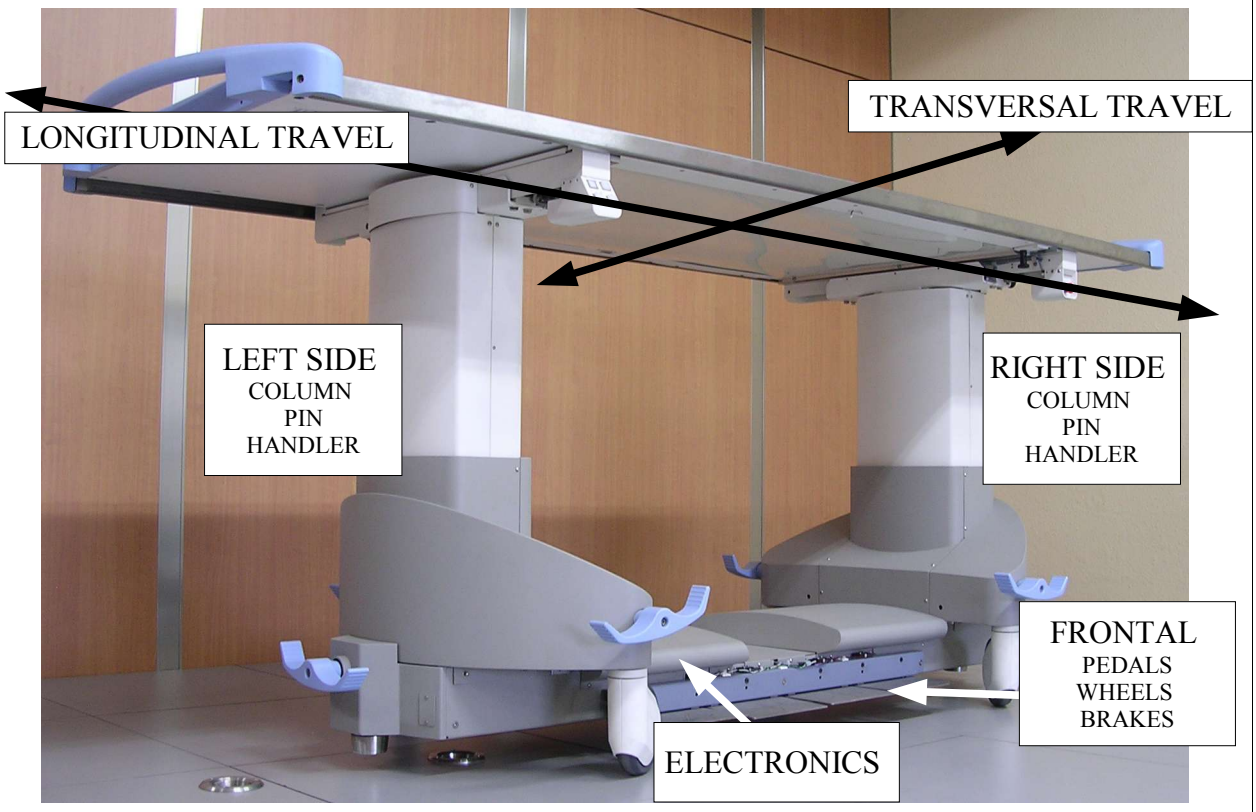


*Figure 2*

BLANK PAGE

# CHAPTER 3. EQUIPMENT SPECIFICATIONS

## 3.1. ENVIRONMENTAL REQUIREMENTS

| ***Atmospheric pressure (mm. Hg)*** | | ***Altitude (m)*** | | ***Relative humidity (%)*** | | ***Ambient temperature (ºC)*** | |
|---|---|---|---|---|---|---|---|
| ***MIN*** | ***MAX*** | ***MIN*** | ***MAX*** | ***MIN*** | ***MAX*** | ***MIN*** | ***MAX*** |
| **OPERATING** | | | | | | | |
| 525 (700 mbar) | 975 (1300 mbar) | -10 | 3000 | 20 | 85 | 10 | 40 |
| **TRANSPORT AND STORAGE** | | | | | | | |
| 525 (700 mbar) | 975 (1300 mbar) | -10 | 3000 | 10 | 95 | -20 | 70 |

## 3.2. DIMENSIONS AND PRODUCT WEIGHT

| ***TABLETOP DIMENSIONS & TRAVEL*** | | | |
|---|---|---|---|
| TRANSVERSAL | wide | transversal travel | total transversal travel |
| mm. | 895 | Adjustable between 80 and 91 | Variable between 160 and 182 |
| inches | 35,24 | Adjustable between 3,14 and 3,58 | Variable between 6,29 and 7,16 |
| LONGITUDINAL | long | longitudinal travel | total longitudinal travel |
| mm. | 2436 | +/- 790 | 1580 |
| inches | 95,91 | +/-31,10 | 62,2 |
| ***FLEXI-DT DISTANCES*** | | | |
| DISTANCES | PIN DISTANCE | WHEELS DISTANCE LONGITUDINAL | |
| mm. | 1735 | 1086 | |
| inches | 68,31 | 42,76 | |
| ***FLEXI-DT WEIGHT*** | | | |
| WEIGHT | TOTAL | | MAX PATIENT |
| kg | 290 | | 200 |
| Lb | 639,33 | | 440,92 |

## 3.3. CRATE DIMENSIONS

| LENGTH | WIDTH | HEIGHT | WEIGHT |
|---|---|---|---|
| 1600 mm. | 960 mm. | 1100 mm. | 350 kg |
| 62,99 inches | 37,80 inches | 43,31 inches | 771,61 lbs |

## 3.4. ELECTRICAL REQUIREMENTS

| FREQUENCY (HZ) | | VOLTAGE (V ~) | | MAX CURRENT (A) | |
|---|---|---|---|---|---|
| MIN | MAX | MIN | MAX | Moment | Continuous |
| 50 | 60 | 115 | 240 | 4 | 2 |

## 3.5. EQUIPMENT CLASSIFICATION

According to the actual Directives and regulations, this equipment is

- TIPE B

According to the type of protection against electric shock TIPE B

- CLASS 1

According to the degree of protection against electric shock.

- IPX0

According to the degree of protection against ingress of water. (Enclosed equipment without protection against ingress of liquids)

## 3.6. LABELLING

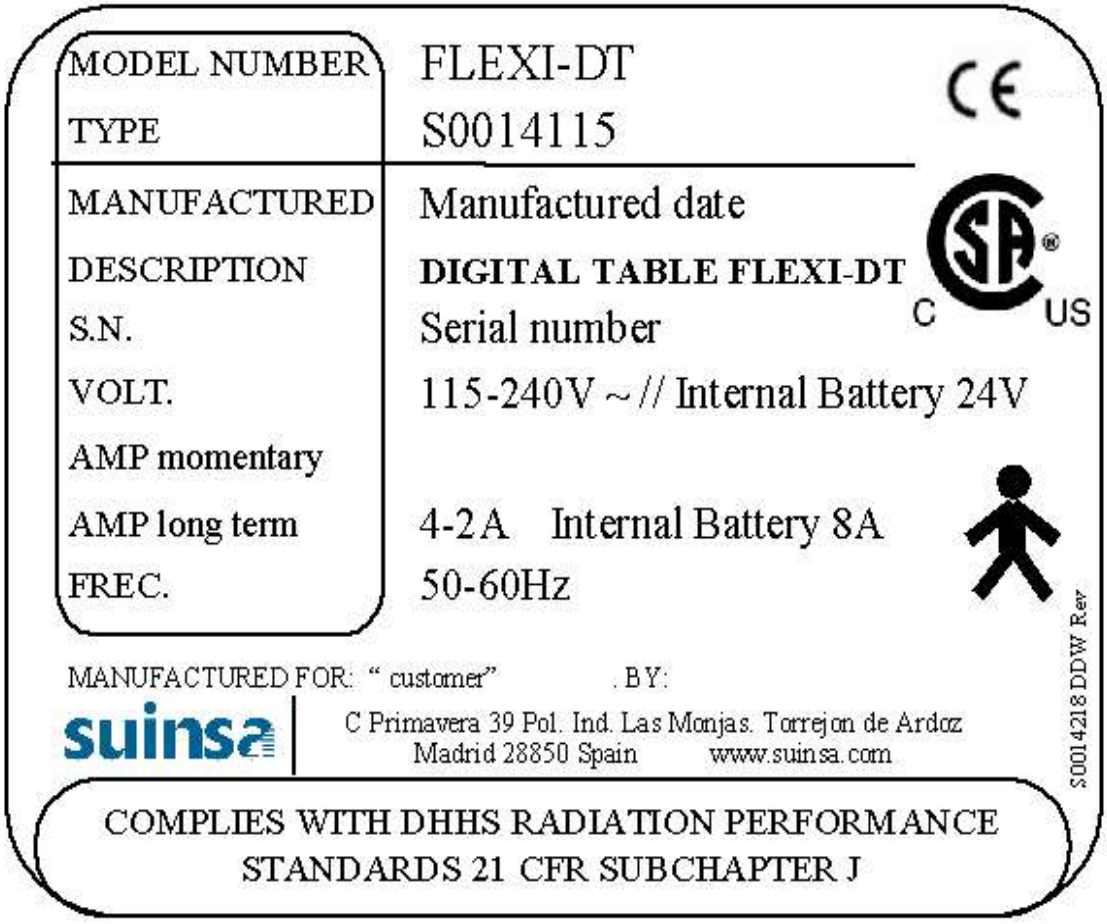

## 3.7. DRAWINGS

All measurements are in millimeters (mm.)

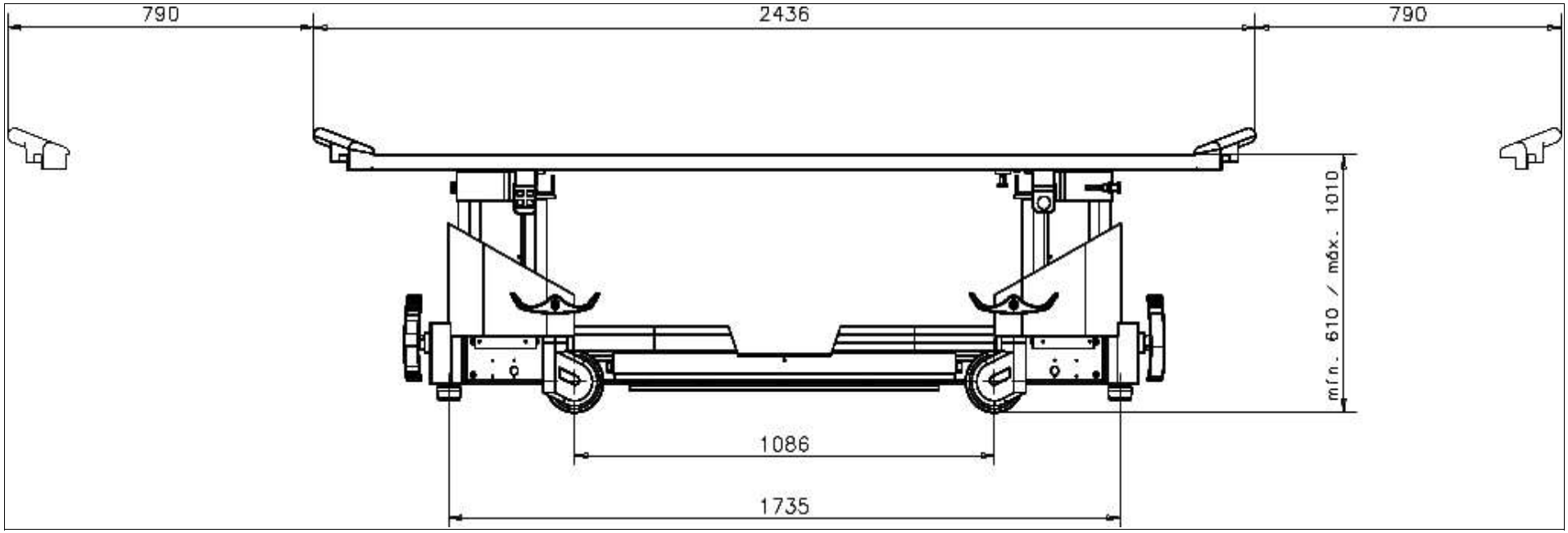


*Figure 3*

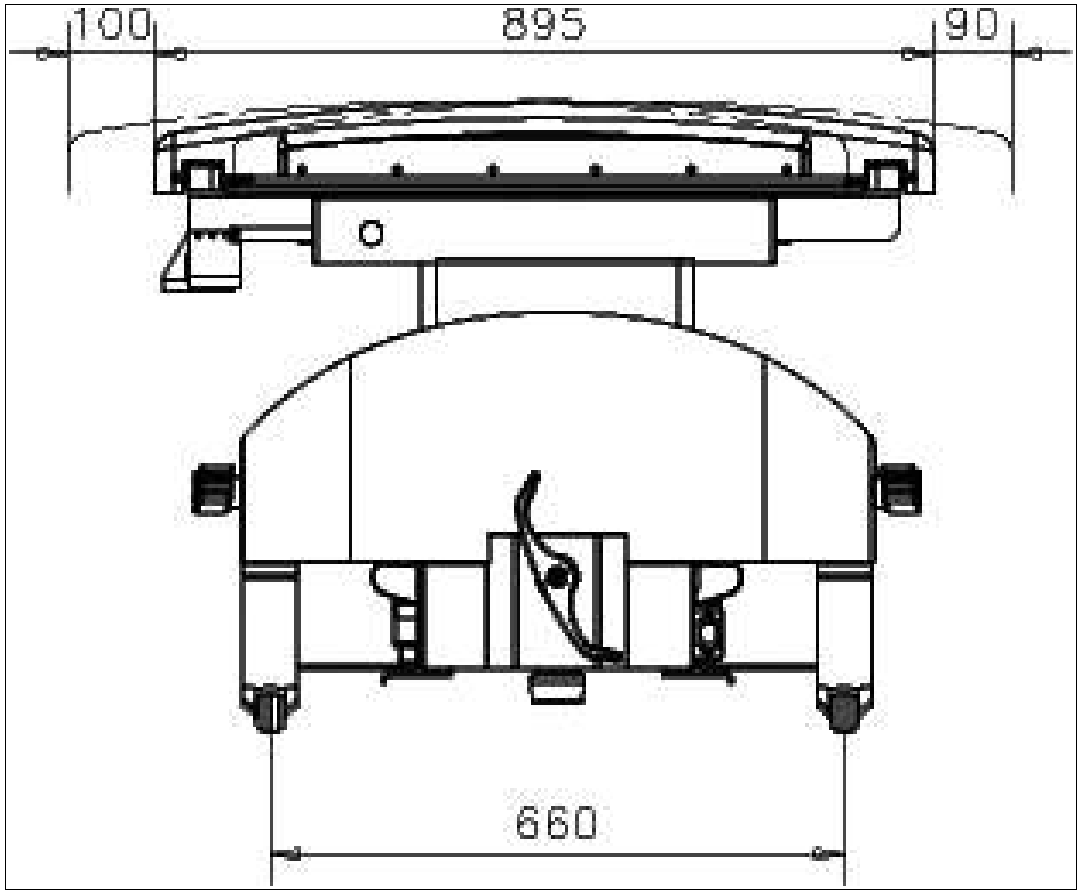


*Figure 4*

# CHAPTER 4. ROOM SPECIFICATIONS

## 4.1. CONSIDERATIONS

### 4.1.1. RADIATION PROTECTION

Because X-Ray equipment produces radiation, you may need to take special precautions or make special site modifications. SUINSA Medical Systems does not make recommendations regarding radiation protection. It is the purchasers' responsibility to consult a radiation physicist for advisement on radiation protection in X-Ray rooms.

### 4.1.2. SERVICE ACCESS

Allow appropriate space for service access of equipment. Consult equipment and crate dimensions at specifications chapter.

### 4.1.3. CLINICAL ACCESS

Make sure that you plan the room with the following clinical access requirements:

- Operators in the control area must have easy access to the control console. However, position the controls (including hand switches) so the operator cannot take exposures while looking around or standing outside the control booth's lead glass window.

- Consult customer on the number and location of non electrical lines (air, oxygen, vacuum, water, etc.) in the room.

NOTE

*The generally accepted practice is to load the patient laterally. In case of room layout designed for longitudinal patient loading, some modifications must be brought to the table.*

### 4.1.4. PERIPHERAL EQUIPMENT

Consult hospital personnel regarding additional space requirements for the following types of hospital equipment:

- Storage cabinets

- Sinks

- Oxygen stations

- Injectors

- Heart monitoring equipment

- Crash cart

## 4.2. ENVIRONMENTAL REQUIREMENTS

Must comply the equipment specifications. See specific chapter.

## 4.3. ELECTRO MAGNETIC COMPATIBILITY

EMC compliance with 93/42/EEC concerning medical devices.

See EMC precautions at the PRELIMINARY PRECAUTIONS CHAPTER.

# 4.4. STRUCTURAL REQUIREMENTS

## 4.4.1. MINIMUM DOOR SIZE

Assure that the clinical door dimensions are enough to let the equipment access to the room. See Specifications chapter.

## 4.4.2. CEILING REQUIREMENTS

Not applicable

## 4.4.3. WALL REQUIREMENTS

Wall plug location:

NOTE ☞

*The FLEXI-DT has a 6 meter cable for recharging batteries.*

*The plug is located on the table right side. Also, there is a cover protected plug on the left side. See service manual for table plug change procedure.*

*It is customer responsibility:*

- *the table plug position planing.*
- *providing wall plug at the adequate distance.*

## 4.4.4. FLOOR REQUIREMENTS

The Digital Table Flexi-DT is a mobile table but it can be fixed to the floor by its mechanism of PINS. The pins have to be attached and fixed to the floor according to *the cazoletas_template.dwg* t (lodgings see Figure 5 Pin Lodging Dimensions.). See service manual for lodgings installation.

The floor where the table is going to be used or displaced along must be hard and rigid enough to support table weight (see specifications chapter). The recommended floor material is wood or ceramic, avoid carpet floor.

The ground surface under the table must be flat and horizontal (±0.5 cm/m) and have a minimum thickness of 150 mm. to enable lodgings installation.

## 4.5. ELECTRICAL REQUIREMENTS

Must comply the equipment specifications. See equipment specification chapter.

NOTE

*The FLEXI-DT has a 6 meter cable for recharging batteries.*

*The plug is located on the table right side. Also, there is a cover protected plug on the left side. See service manual for table plug change procedure.*

*It is customer's responsibility:*

- *the table plug position planing.*
- *providing wall plug at the adequate distance.*

## 4.6. ROOM DIMENSIONS

The minimum room dimensions to allow rotation of the FLEXI-DT around a pin lodging is 4920 mm. Long and 3525 mm. wide. See drawings section.

## 4.7. TYPICAL ROOM LAYOUTS

At drawing section are shown next layouts:

- The table turning around its right pin.
- The table turning around its left pin.
- The table in sagital configuration (in front of the WS @0 degrees).
-
-
-
-

## 4.8. DRAWINGS

NOTE

*All measures are in mm.*

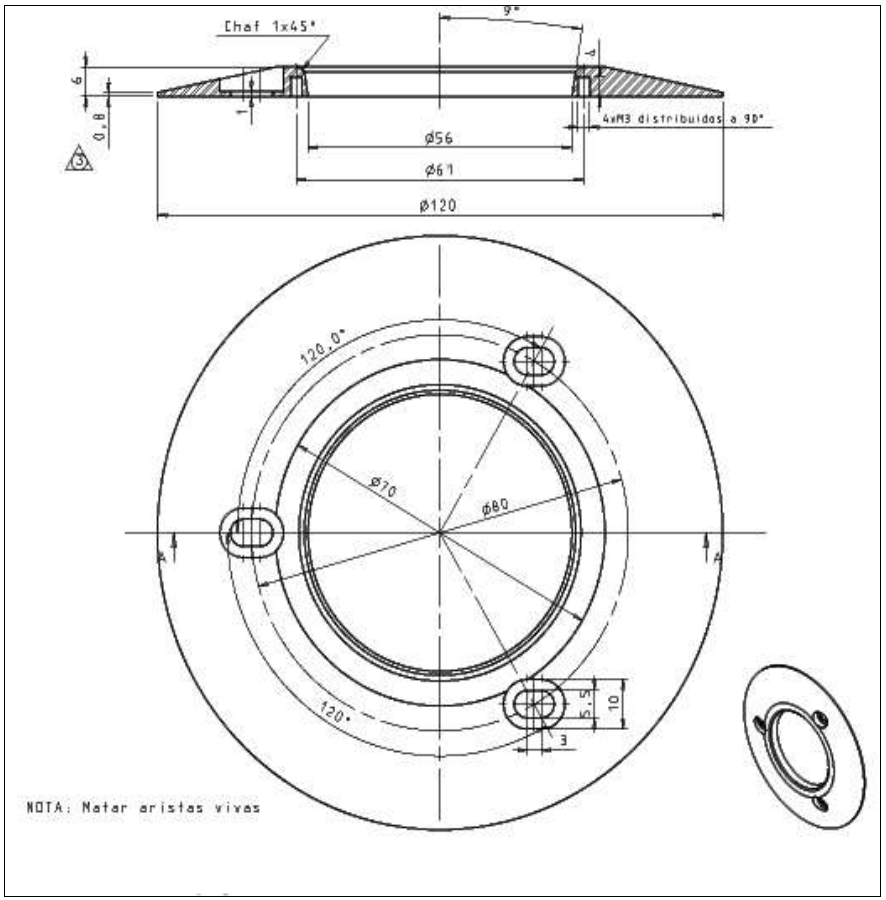


*Figure 5. Pin Lodging Dimensions.*

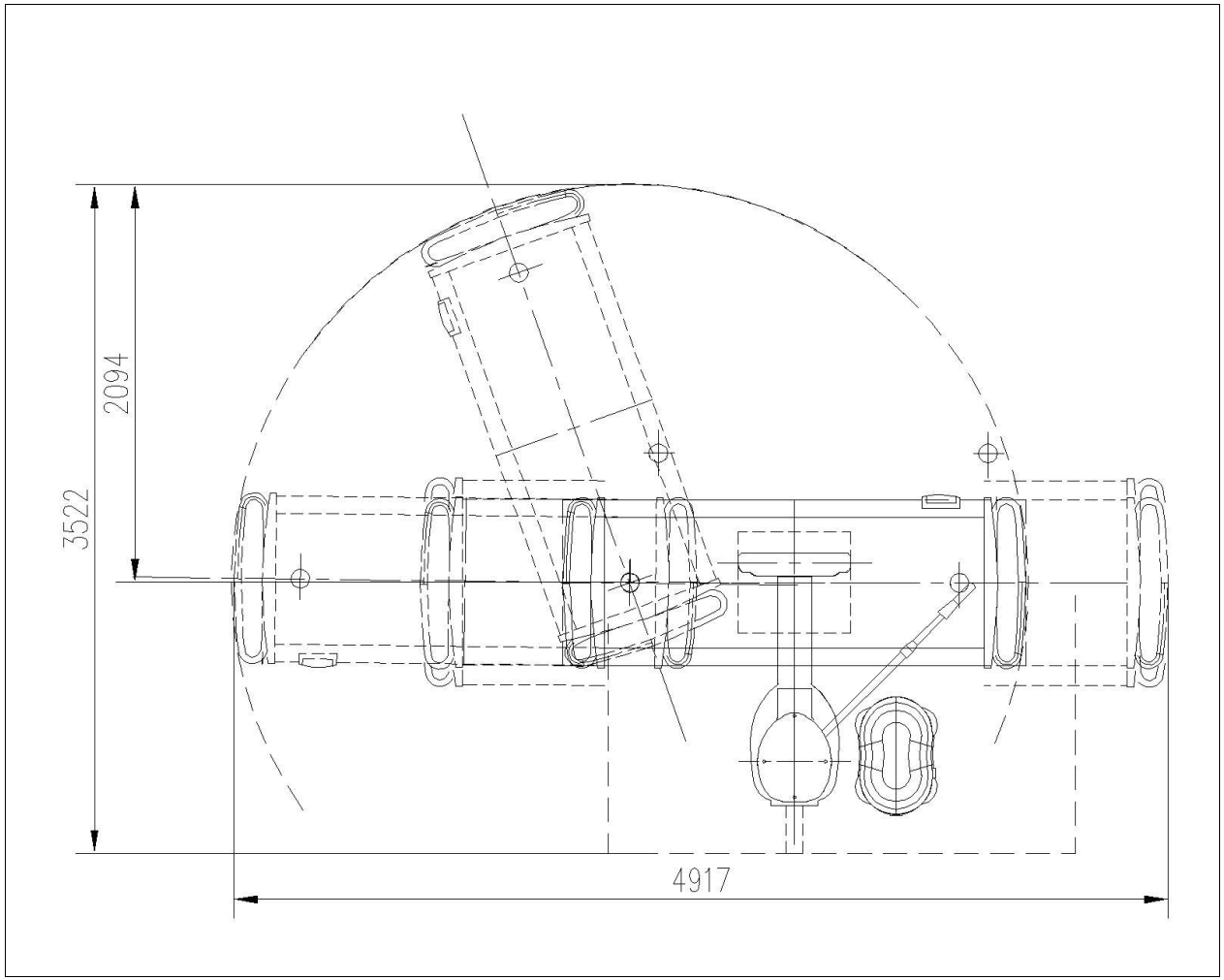


*Figure 6.Table turning around its right pin.*

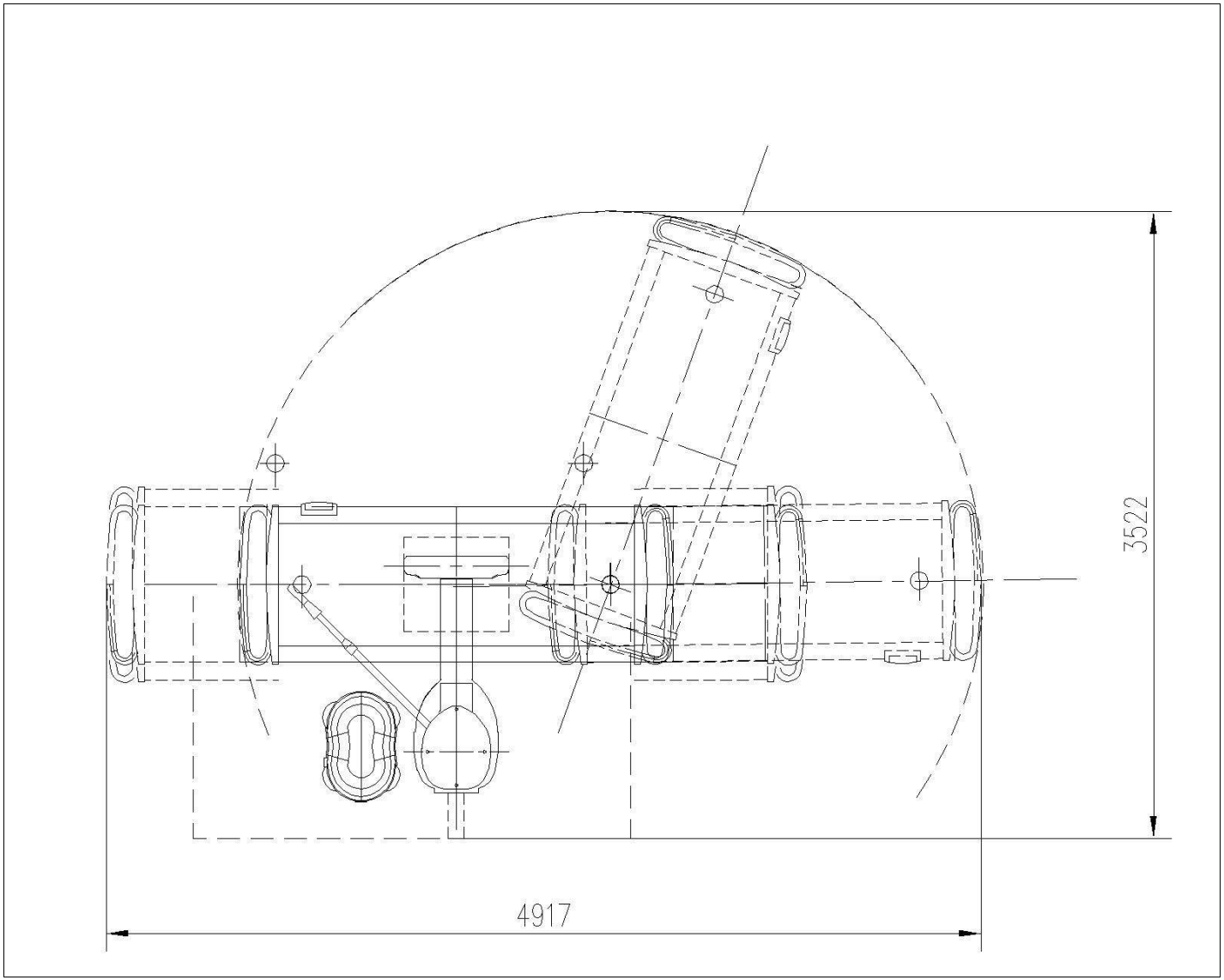


*Figure 7.Table turning around its left pin*

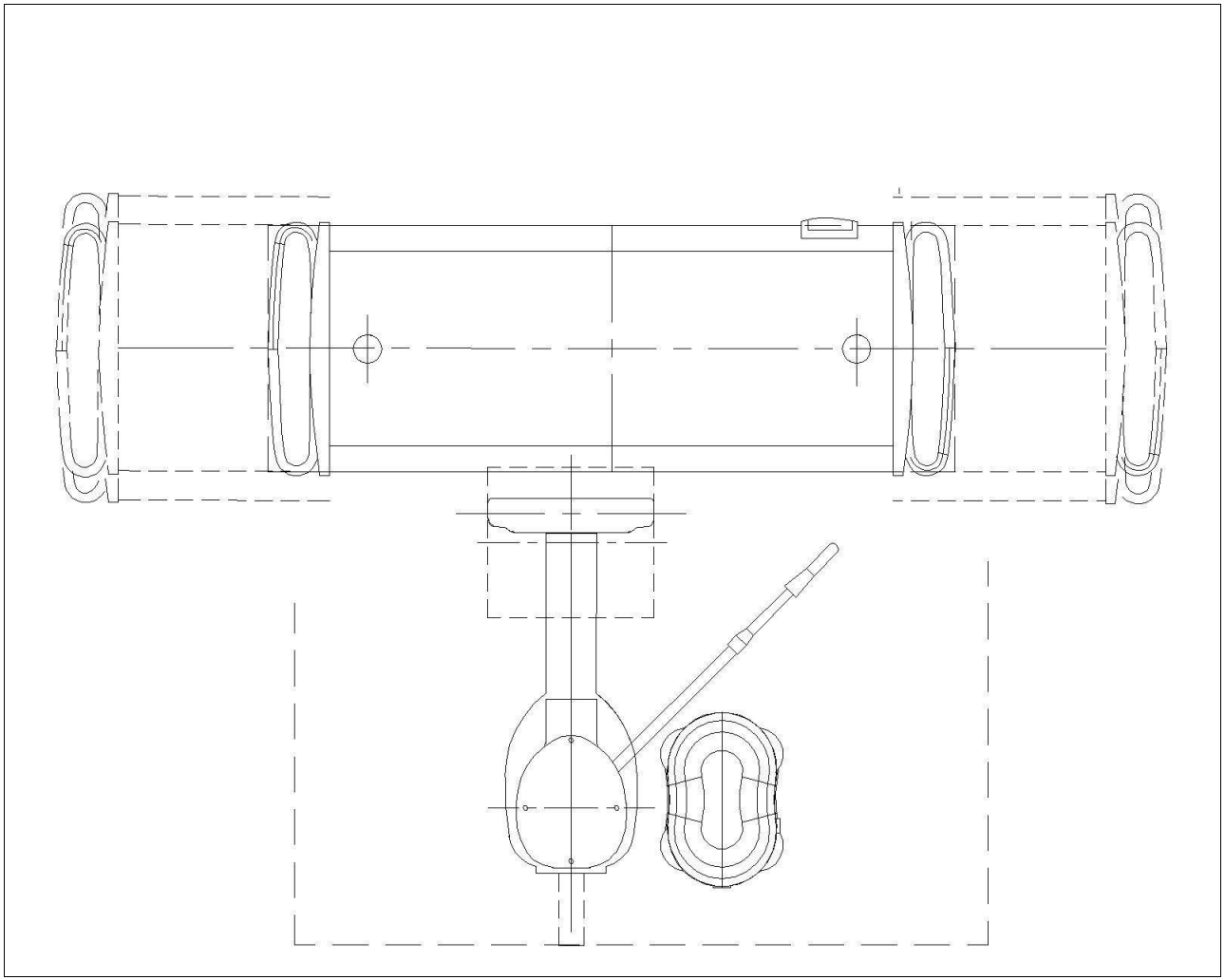

*Figure 8. Table in sagital configuration.*