REV	DATE	MODIFICATIONS

SITE NAME

CITY

COUNTRY

01 - Cover Sheet
02 - Equipment Layout
03 - Floor - Electrical Layout
04 - Structural Details
05 - Power Requirements - Power Distribution
06 - Detailed Schematics of PDB
07 - HVAC - Environment - Equipment dimensions
08 - Interconnection - Delivery
09 - Disclaimer - Site Readiness

A mandatory component of this drawing set is the GE Healthcare Pre Installation manual. Failure to reference the Pre Installation manual will result in incomplete documentation required for site design and preparation.
Pre Installation documents for GE Healthcare products can be accessed on the web at: www.gehealthcare.com/siteplanning

GE does not take responsibility for any damages resulting from changes on drawings made by others. Errors may occur by not referring to the complete set of final issue drawing. GE cannot accept responsibility for any damage due to the partial use of GE final issue drawings, however caused. All dimensions are in millimeters unless otherwise specified. Do not scale from printed pdf files. GE accepts no responsibility or liability for defective work due to scaling from these drawings.

GE Healthcare

GE CONTACT NAME
PHONE NUMBER
EMAIL ADDRESS

SENOGRAPHE CRYSTAL NOVA FINAL STUDY

Drawn by	Verified by	Concession	S.O. (GON)	PIM Manual	Rev
-	-	-	-	6673206-8EN	3

Format	Scale	File Name	Date	Sheet
A3	1:50	EN-MAM-TYP-SENO_CRYSTAL_NOVA_C.DWG	08/OCT/2021	01/09

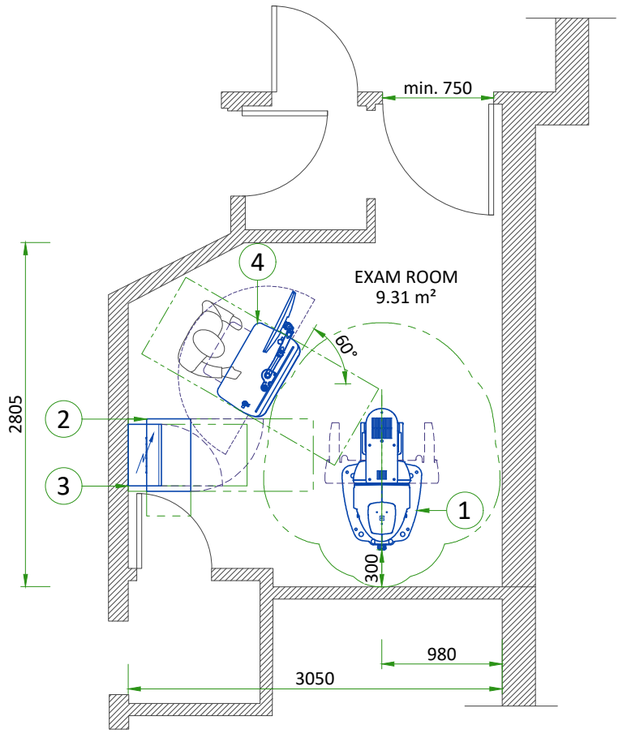

EQUIPMENT LAYOUT

ITEM	DESCRIPTION	DIMENSIONS LxWxH (mm)	WEIGHT (kg)
1	GANTRY	1104x650x2002	308.6
2	GENERATOR CABINET	360x592x690	91.8
3	POWER DISTRIBUTION BOX (PDB)	500x270x700	42
4	OPERATOR CONSOLE	616x1130x1853	97.2

WALL - ACCORDING TO RECEIVED DRAWING

EXAM ROOM HEIGHT	
FINISHED FLOOR TO SLAB HEIGHT	-
FALSE CEILING HEIGHT	min. 2.40 m

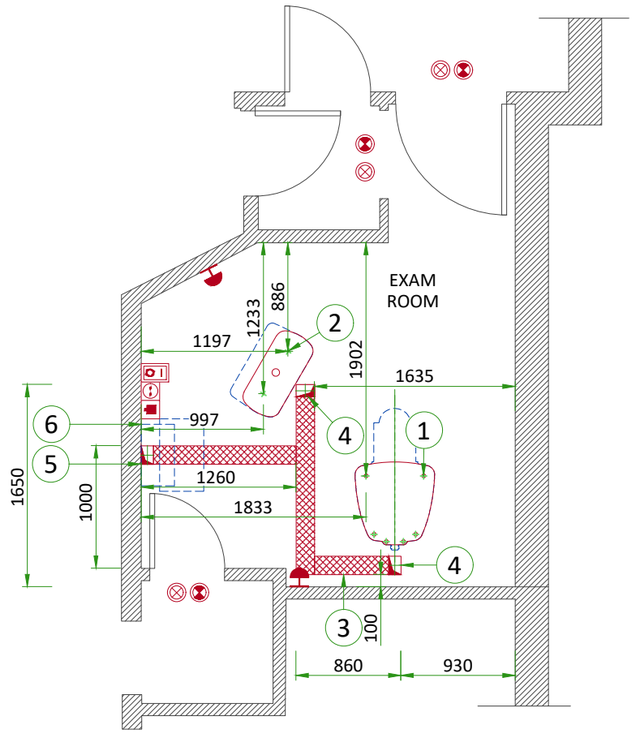

FLOOR AND ELECTRICAL LAYOUT

REP	QTE	DESIGNATION
1		Gantry anchoring (see Floor & Wall Struct Details)
2		Console anchoring (see Floor & Wall Struct Details)
3		150x80 flush floor duct
4		150x100 cable inlet on the floor
5		150x100 vertical duct from floor to PDB
6		Power Distribution Box (PDB)

Basic system		
	1	Electrical outlet 10/16A 230V + G
	1	RJ 45 network socket
	1	System remote control (Y), locked when power OFF "ON" and "OFF" impulse buttons with indicator lamps red=ON / green=OFF located at 1.50m above floor
	2	System emergency off (SEO), (recommended height 1.50m-1.85m above floor)
	3	System ON light (L) - 24V
	3	X-Ray ON lamp (L1) - 24V

Flush floor duct

ANCHORING TO THE FLOOR

GANTRY

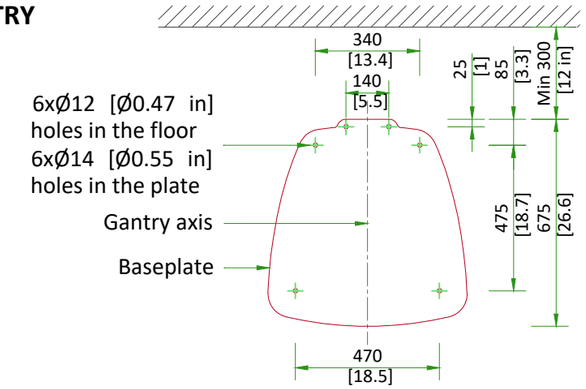

CONTROL STATION

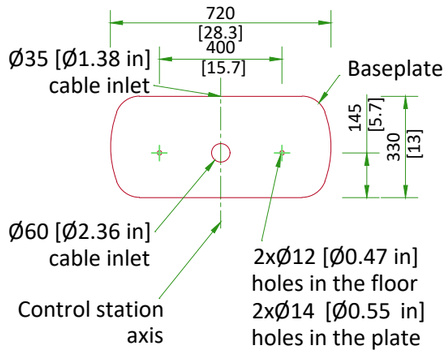

- Anchors are supplied by GE
- Inserts to be used: Hilti HSL-3 M8/20
- Minimum hole depth in the floor: 80 mm [3.2 in]
- Minimum floor thickness: 100 mm [3.9 in]
- Recommended tightening torque: 25 Nm
- The floor must be stable and flat, and sufficiently strong to accept masses as defined below without distortion beyond the tolerance given:
  - The worst case mass of the complete Gantry / Control station is 308.6 kg [680.3 lb]±10% / 97.2 kg [214.3 lb]±10%
  - The bearing surface of the Gantry / Control Station base plate is 0.35 m² [3.78 ft²] / 0.22 m² [2.37 ft²]

NOT TO SCALE

TYPICAL CABLE MANAGEMENT

FLUSH FLOOR DUCT

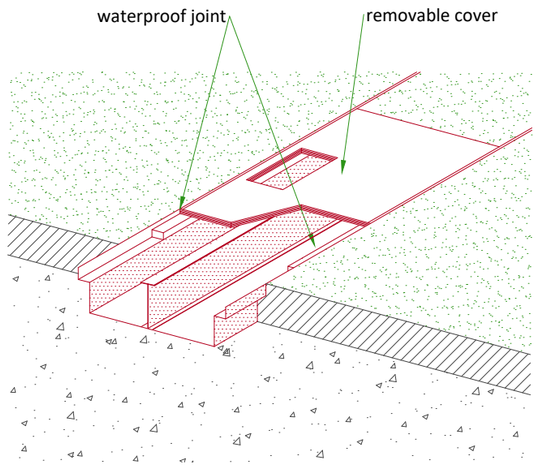

WALL DUCT

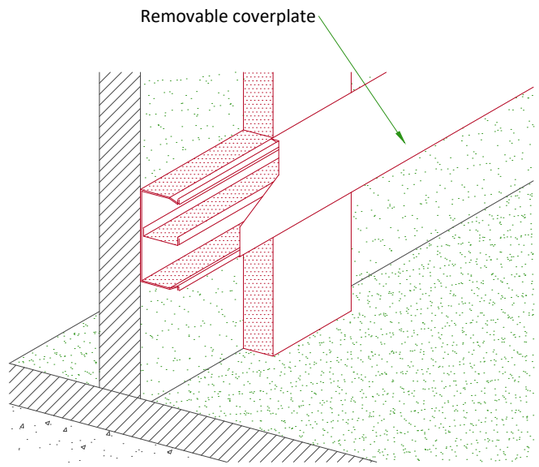

NOT TO SCALE

ROOM HEIGHT REQUIREMENTS

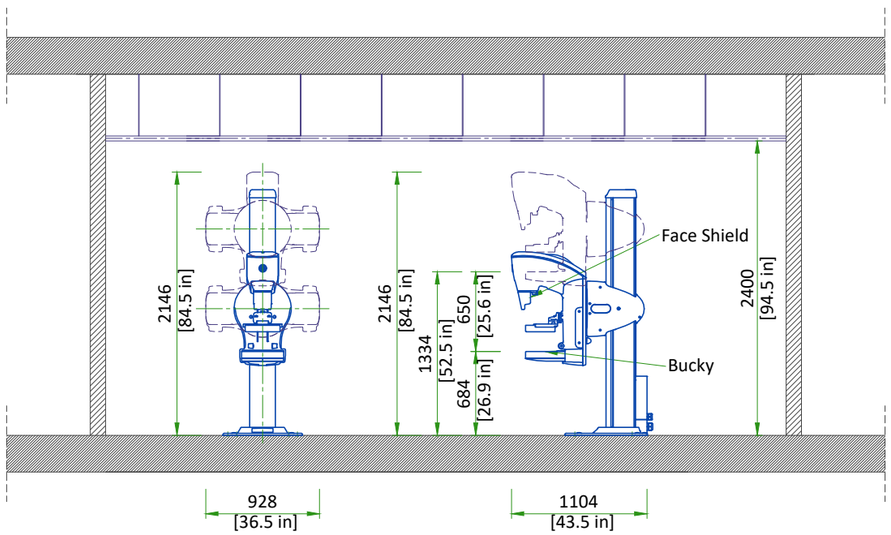

TUBE HEAD MAXIMUM HEIGHT	ROTATED C-ARM MAXIMUM HEIGHT	MAXIMUM HEIGHT FOR SERVICE ABILITY	MINIMUM CEILING HEIGHT
2146 mm [84.5 in]	2146 mm [84.5 in]	2262 mm [89.1 in]	2400 mm [94.5 in]

POWER AND NETWORK REQUIREMENTS

POWER SUPPLY

POWER SUPPLY		**SINGLE PHASE + GROUND**
VOLTAGES		**220/230 V ± 10%**
MAXIMUM INSTANTANEOUS POWER (DURING EXPOSURES)		**6.9 kVA**
MAXIMUM POWER IN STANDBY		**0.5 kVA**
FREQUENCIES		**50/60 Hz ± 1 Hz**
LINE IMPEDANCE	Distribution transformer	**0.339 Ohm**
	Each feeder cable	**0.095 Ohm**
	Generator input terminal	**0.625 Ohm**

- TNS neutral point connection recommended (TNC neutral point connection must not be used)
- Power supply should come into a Power Distribution Box (PDB) containing the protective units and controls.
- The section of the supply cable should be calculated in accordance with its length and the maximum permissible voltage drops.
- There must be discrimination between supply cable protective device at the beginning of the installation (Main low-voltage transformer side) and the protective devices in the PDB.

SUPPLY CHARACTERISTICS

- Power input must be separated from any others which may generate transients (elevators, air conditioning, radiology rooms equipped with high speed film changers...)
- All equipment (lighting, power outlets, etc...) installed with GE system components must be powered separately.

GROUND SYSTEM

- Equipotential : the equipotential link will be by means of an equipotential bar.
  This equipotential bar should be connected to the protective earth conductors in the ducts of the non GE cableways and to additional equipotential connections linking up all the conducting units in the rooms where GE units are located.

CABLES

- Power and cable installation must comply with the distribution diagram below.
- All cables must be isolated and flexible.
- Cable color codes must comply with standards for electrical installation.
- Case PDB furnished by GE : the cables for signals and remote control (Y, SEO, L...) will go to PDB with a pigtail length of 1.5m, and will be connected during installation. Each conductor will be identified and isolated (screw connector).
- The ligne supply cable from the generator must be internally and permanently connected to the hospital power distribution box and cannot be externally connected to the Power Distribution Box via a plug. The internal and permanent connection must be made in a way such the line supply cable can only be disconnected by use of a tool.

CABLEWAYS

The general rules for laying cableways should meet the conditions laid down in current standards and regulations, with regard to :

- Protecting cables against water (cableways should be waterproof)
- Protecting cables against abnormal temperatures (proximity to heating pipes or ducts)
- Protecting cables against temperature shocks
- Replacing cables (cableways should be large enough for cables to be replaced). Metal cableways should be grounded.

POWER DISTRIBUTION

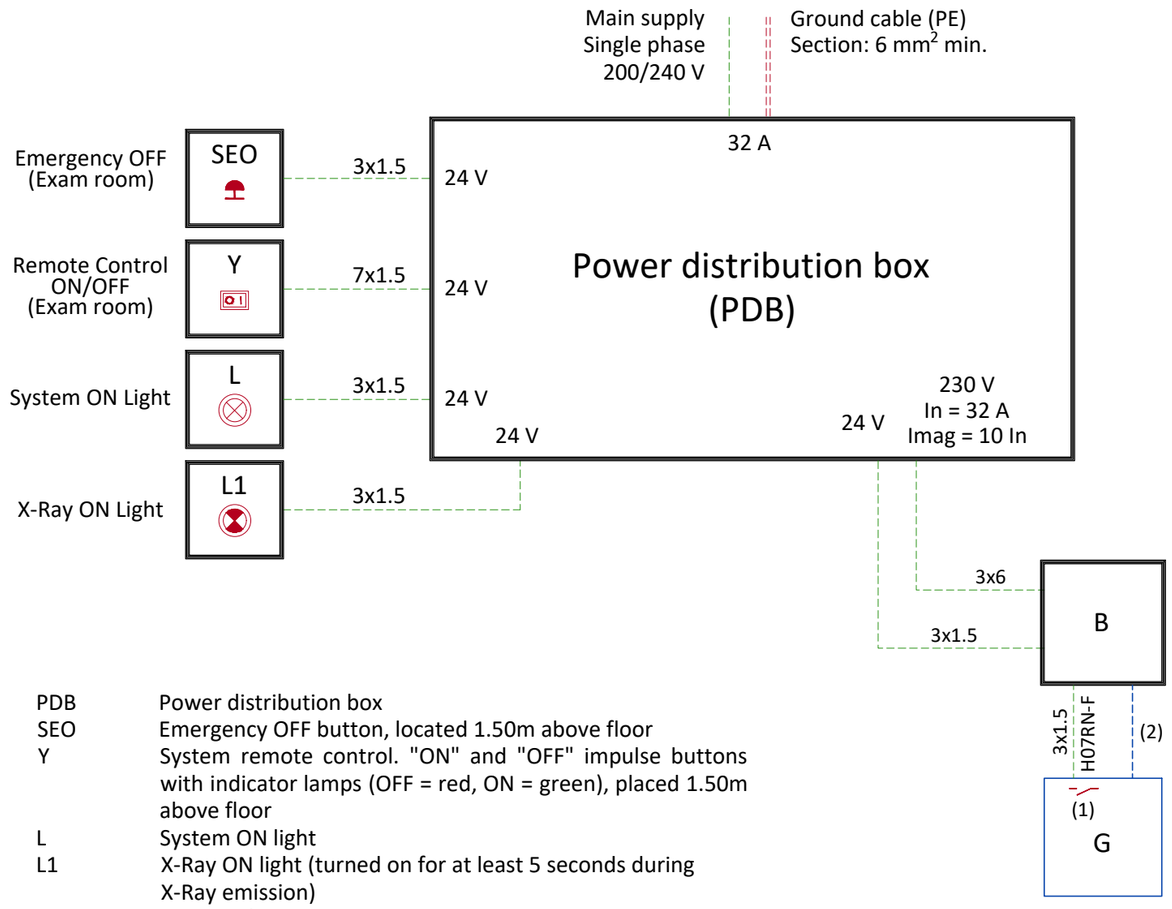

PDB	Power distribution box
SEO	Emergency OFF button, located 1.50m above floor
Y	System remote control. "ON" and "OFF" impulse buttons with indicator lamps (OFF = red, ON = green), placed 1.50m above floor
L	System ON light
L1	X-Ray ON light (turned on for at least 5 seconds during X-Ray emission)
B	Junction box Wall duct guided cables are housed in a junction box
G	Generator cabinet

Notes :

(1)	Two dry contacts: "System ON" and "X-Ray ON", both released by the generator cabinet. Max. voltage = 30 V
(2)	2 x AWG12 (3.3 mm² / Ph + N) + 1 x AWG10 (5.3mm² / Earth) cable with 9.5 m usable length, supplied with the system

- Cable SUPPLIED BY CUSTOMER
- Cable SUPPLIED BY GE
- Equipment SUPPLIED BY CUSTOMER
- Equipment SUPPLIED BY GE

PDB SCHEMATICS AND DETAILS THAT APPEAR ON THIS PAGE
ARE THE PROPERTY OF "GE MEDICAL SYSTEMS FRANCE"

DETAILED SCHEMATICS OF POWER DISTRIBUTION BOX

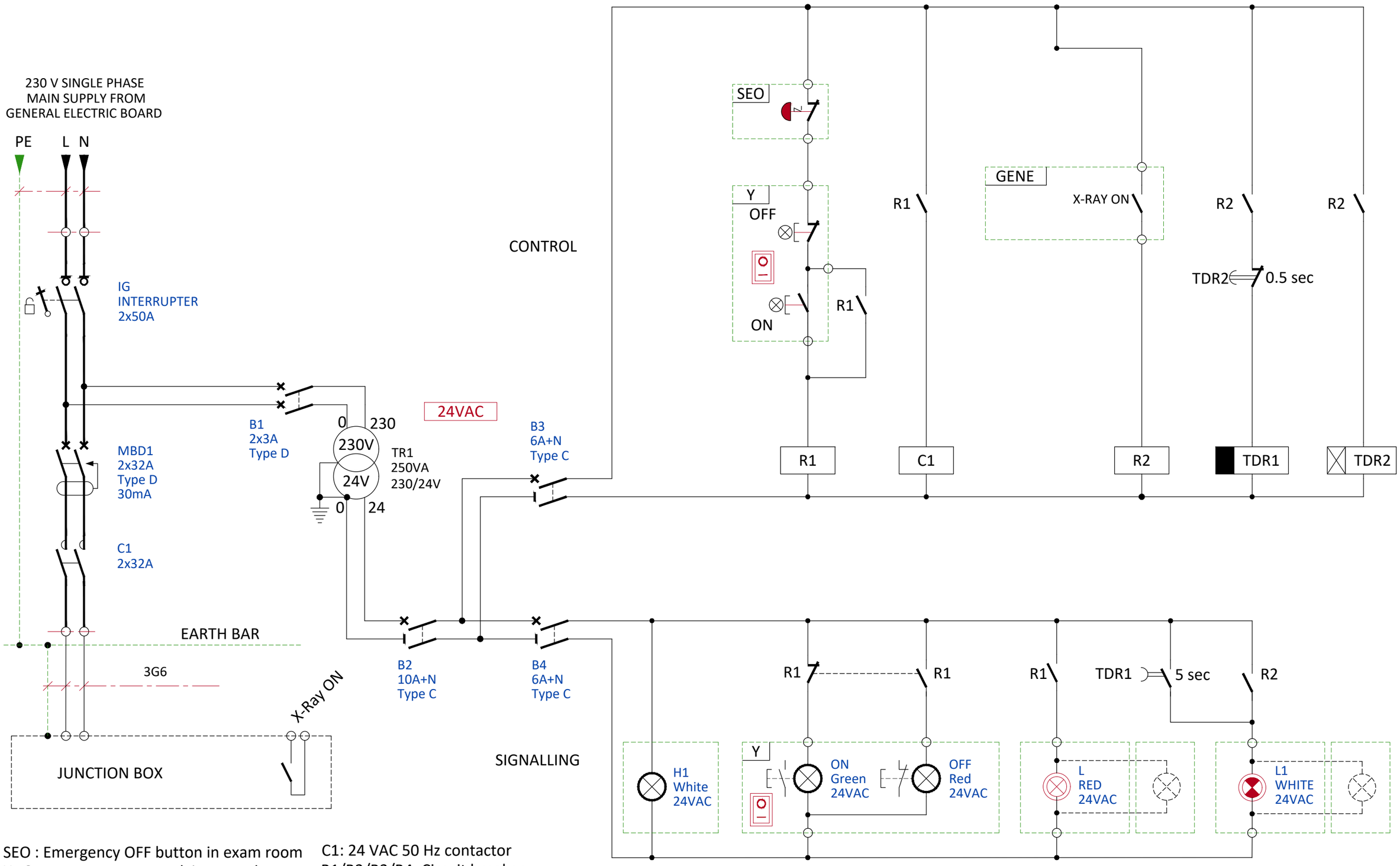

SEO : Emergency OFF button in exam room
Y : System remote control in control room
H1 : On the door of PDB unit
MBD1: D type magnetic breaker

C1: 24 VAC 50 Hz contactor
B1/B2/B3/B4: Circuit breaker
R1/R2/R3: 24 VAC 50 Hz relay
TDR1/TDR2: 24 V 50 Hz time delay relay with switch-off/switch-on delay

PDB SCHEMATICS AND DETAILS THAT APPEAR ON THIS PAGE
ARE THE PROPERTY OF "GE MEDICAL SYSTEMS FRANCE"

TEMPERATURE AND HUMIDITY SPECIFICATIONS

IN-USE CONDITIONS

Environmental conditions must ensure patient and operator comfort and must be maintained within the range below:

	Min	Recommended	Max
Temperature	15°C [59°F]	23°C ± 3°C [73°F ± 5°F]	30°C [86°F]
Relative humidity (1)	10% to 80%		
Atmospheric pressure	700 hPa to 1060 hPa		
System heat dissipation	Average		
	0.44 kW [1507 BTU/h]		

STORAGE CONDITIONS

Temperature	-5°C to +40°C [23°F to 104°F]
Atmospheric pressure	500 hPa to 1060 hPa
Relative humidity (1)	10% to 95%

Storage for less than 5 days.
(1) Non-condensing

AIR RENEWAL

According to local standards.

NOTE
In case of using air conditioning systems that have a risk of water leakage it is recommended not to install it above electric equipment or to take measures to protect the equipment from dropping water.

ENVIRONMENTAL SPECIFICATIONS

MAGNETIC INTERFERENCE

In order to avoid interference on the Senographe system, static field limits from the surrounding environment are specified.

- Static field is specified as less than 1 Gauss in the Examination room (Gantry room), and the Control Area (for all Subsystems).
- Static field is specified as less than 3 Gauss in the Technical Room.

LIGHT REQUIREMENTS

In order to obtain a room brightness value of 160 lux or less for correct viewing of monitor images, the room lights must be equipped with a dimmer switch. Shades and/or drapes must be fitted to windows.

ALTITUDE

Operating altitude: from 0 m [0 ft] to 3000 m [9,843 ft].

EQUIPMENT DIMENSIONS

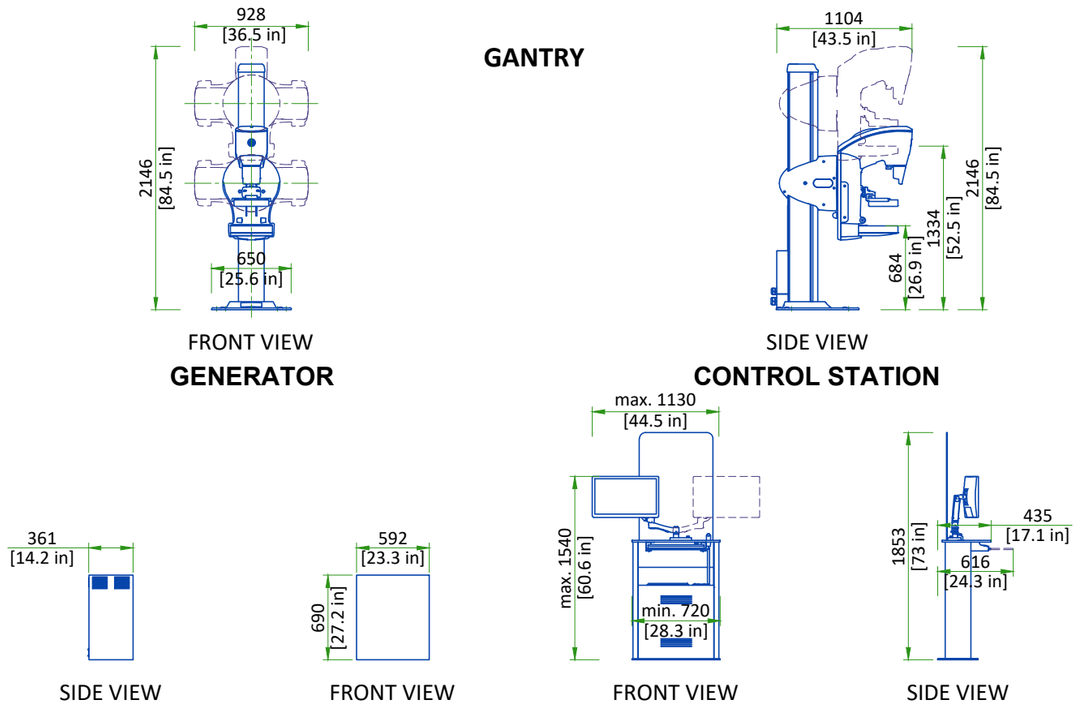

NOT TO SCALE

CONNECTIVITY REQUIREMENTS

Broadband Connections are necessary during the installation process and going forward to ensure full support from the Engineering Teams for the customers system. Maximum performance and availability for the customers system is maintained and closely monitored during the lifetime of the system. Proactive and reactive maintenance is available utilising the wide range of digital tools using the connectivity solutions listed below:

- Site-to-Site VPN/GE Solution
- Site-to-Site VPN/Customer Solution
- Connection through Dedicated Service Network

The requirements for these connectivity solutions are explained in the broadband solutions catalogue (separate document).

INTERCONNECTION

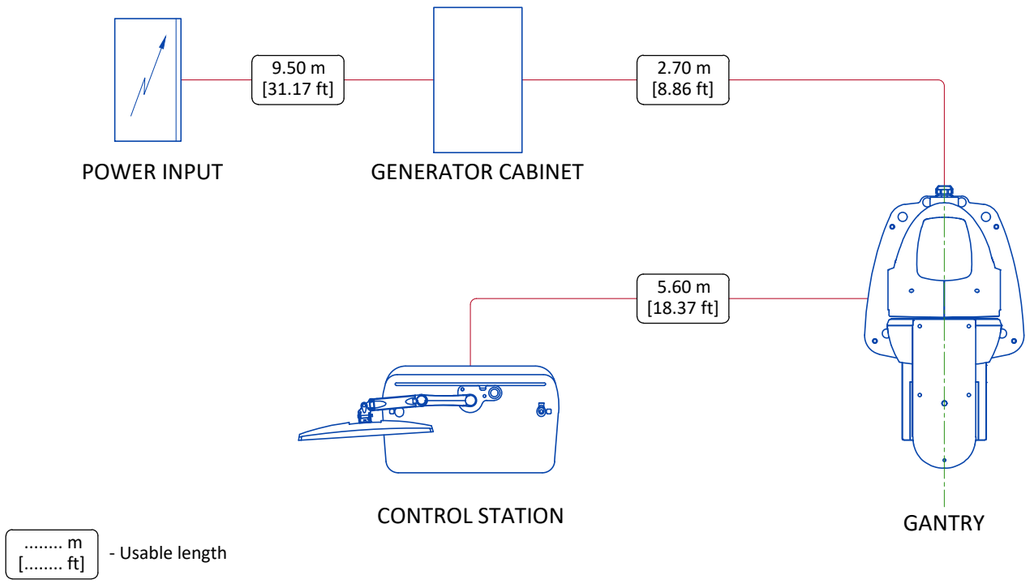

NOT TO SCALE

DELIVERY

THE CUSTOMER MUST :

- Provide an area, adjacent to the GE suite, for delivery and unloading of the GE equipment.
- Ensure that the dimensions of all doors, corridors, ceiling heights, are sufficient to accommodate the movement of GE equipment from the delivery area to the specific rooms of the GE site.
- Ensure that the access route will accommodate the weights of the equipment and any transportation, lifting and rigging equipment,
- If the parking and dock facilities are on property which does not belong to the customer, ensure that all necessary steps have been taken to ensure their temporary use by GE.

DIMENSIONS		
	CRATE 1	CRATE 2
DEPTH (mm [in])	2280 [89.76]	698.5 [27.50]
WIDTH (mm [in])	1400 [55.12]	622.3 [24.50]
HEIGHT (mm [in])	1550 [61.02]	428.6 [16.87]
WEIGHT (kg [lb])	765 [1686.5] ± 10%	19.575 [43.2] ± 10%

DELIVERY WITH DOLLIES

Minimum dimensions for door :
Width 750 mm [29.52 in]
Height 2136 mm [84.09 in] (2002 mm [78.81 in] with gantry's top cover, without dolly)

DISCLAIMER

GENERAL SPECIFICATIONS

- GE is not responsible for the installation of developers and associated equipment, lighting, cassette trays and protective screens or derivatives not mentioned in the order.
- The final study contains recommendations for the location of GE equipment and associated devices, electrical wiring and room arrangements. When preparing the study, every effort has been made to consider every aspect of the actual equipment expected to be installed.
- The layout of the equipment offered by GE, the dimensions given for the premises, the details provided for the pre-installation work and electrical power supply are given according to the information noted during on-site study and the wishes expressed by the customer.
- The room dimensions used to create the equipment layout may originate from a previous layout and may not be accurate as they may not have been verified on site. GE cannot take any responsibility for errors due to lack of information.
- Dimensions apply to finished surfaces of the room.
- Actual configuration may differ from options presented in some typical views or tables.
- If this set of final drawings has been approved by the customer, any subsequent modification of the site must be subject to further investigation by GE about the feasibility of installing the equipment. Any reservations must be noted.
- The equipment layout indicates the placement and interconnection of the indicated equipment components. There may be local requirements that could impact the placement of these components. It remains the customer's responsibility to ensure that the site and final equipment placement complies with all applicable local requirements.
- All work required to install GE equipment must be carried out in compliance with the building regulations and the safety standards of legal force in the country concerned.
- These drawings are not to be used for actual construction purposes. The company cannot take responsibility for any damage resulting therefrom.

CUSTOMER RESPONSIBILITIES

- It is the responsibility of the customer to prepare the site in accordance with the specifications stated in the final study. A detailed site readiness checklist is provided by GE. It is the responsibility of the customer to ensure all requirements are fulfilled and that the site conforms to all specifications defined in the checklist and final study. The GE Project Manager of Installation (PMI) will work in cooperation with the customer to follow up and ensure that actions in the checklist are complete, and if necessary, will aid in the rescheduling of the delivery and installation date.
- Prior to installation, a structrual engineer of record must ensure that the floor and ceiling is designed in such a way that the loads of the installed system can be securely borne and transferred. The layout of additional structural elements, dimensioning and the selection of appropriate installation methods are the sole responsibility of the structural engineer. Execution of load bearing structures supporting equipment on the ceiling, floor or walls are the customer's responsibility.

RADIO-PROTECTION

- Suitable radiological protection must be determined by a qualified radiological physicist in conformation with local regulations. GE does not take responsibility for the specification or provision of radio-protection.

THE UNDERSIGNED, HEREBY CERTIFIES THAT I HAVE READ AND APPROVED THE PLANS IN THIS DOCUMENT.		
DATE	NAME	SIGNATURE

GLOBAL SITE READINESS CHECKLIST (DI)

DOC1809666 Rev. 7

Site Ready Checks at Installation
EHS Site Requirements
Overall access route to the scan room free from obstruction / high hazards.
Enough space to store tools, equipment, parts, install waste and the general area free from obstruction and trip hazards.
Enough necessary facilities for the GE employees available.
No 3rd parties working in the area that may affect the safety of the installation activity.
Area free from any chemical, gas, dust, welding fume exposure and has painting been completed and dry.
All emergency routes identified, signed and clear from obstruction.
Accessible single source lockable panel that LOTO can be applied to for GE equipment installation (MDP and/or PDU).
There are no other conditions or hazards that you have observed or have been made aware of by the customer or contractors on site.
Required for Mechanical Install start
Room dimensions, including ceiling height, for all Exam, Equipment/Technical & Control rooms meets GE specifications.
Ceiling support structure, if indicated on the GE drawing, is in the correct location and at the correct height according to the Original Equipment Manufacturer specifications.
Levelness and spacing has been measured, and is ready for the installation of any GE supplied components.
Overhead support Structure (unistrut) has been confirmed with customer/contractor to meet required GE provided criteria.
Finished ceiling is installed. If applicable ceiling tiles installed per PMI discretion.
Floor levelness/flatness is measured and within tolerance, and there are no visible defects per GEHC specifications.
Entry door threshold meets PIM requirement.
Rooms that will contain equipment, including staging areas if applicable, are construction debris free. Precautions must be taken to prevent debris from entering rooms containing equipment.
Cable ways (floor/wall/ceiling/Access Flooring) are available for installation of GE cables are of correct length and diameter.
Cable ways routes per GE Final drawings and cable access openings areas installed at a time determined by GEHC PM. Surface floor duct can be installed at time of system installation.
Adequate room illumination installed and working.
Customer supplied countertops where GE equipment will be installed are in place.
Required for Calibration Start
HVAC systems Installed, and the site meets minimum environmental operational system requirements.
System power & grounding (PDB/MDP) is available as per GE specifications.
System power & grounding (PDB/MDP) is installed at point of final connection and ready to use. Lock Out Tag Out is available.
PMI to confirm all feeder wires and breaker are size appropriately. EPO installed if needed.
PMI to confirm with electrician all power and signal cables are well terminated ensuring there are no loose connections.
Network outlets installed.
Computer network available and working.
Lead doors and windows complete or scheduled to be installed. If applicable, radiation protection (shielding) finished & radioprotection regulatory approval for installation obtained.

Note: The details shown here are only an extract from DOC1809666. For the complete document please contact your PMI.