ALL INFORMATION IN THIS DRAWING SET IS PRELIMINARY, SUBJECT TO CHANGE!

REV	DATE	MODIFICATIONS
B	07/Oct/2021	Initial release per PIM revision 3
A	10/Sep/21	Initial release per PIM revision 2

Typical

---

01 - C1 - Cover Sheet
02 - C2 - Disclaimer - Site Readiness
03 - A1 - General Notes
04 - A2 - Equipment Layout
05 - A3 - Section Views
06 - A4 - Equipment Details & Delivery
07 - M1 - HVAC
08 - S1 - Structural Notes
09 - S2 - Structural Layout
10 - S3 - Structural Details (1)
11 - S4 - Structural Details (2)
12 - E1 - Electrical Notes
13 - E2 - Electrical Layout
14 - E3 - Electrical Elevations
15 - E4 - Details-Interconnections
16 - E5 - Power Requirements

A mandatory component of this drawing set is the GE Healthcare Pre Installation manual. Failure to reference the Pre Installation manual will result in incomplete documentation required for site design and preparation.
Pre Installation documents for GE Healthcare products can be accessed on the web at: www.gehealthcare.com/siteplanning

GE does not take responsibility for any damages resulting from changes on drawings made by others. Errors may occur by not referring to the complete set of final issue drawing. GE cannot accept responsibility for any damage due to the partial use of GE final issue drawings, however caused. All dimensions are in millimeters unless otherwise specified. Do not scale from printed pdf files. GE accepts no responsibility or liability for defective work due to scaling from these drawings.

GE Healthcare

DEFINIUM TEMPO/TEMPO PRO FINAL STUDY

Drawn by	Verified by	Concession	S.O. (GON)	PIM Manual	Rev
RET	TST	-	----	5743002-1EN	3

Format	Scale	File Name	Date	Sheet
A3	1/4"=1'-0"	EN-RAD-TYP-DEFINIUM_TEMPO-WEB.DWG	07/Oct/2021	01/16

DISCLAIMER

GENERAL SPECIFICATIONS

- GE is not responsible for the installation of developers and associated equipment, lighting, cassette trays and protective screens or derivatives not mentioned in the order.
- The final study contains recommendations for the location of GE equipment and associated devices, electrical wiring and room arrangements. When preparing the study, every effort has been made to consider every aspect of the actual equipment expected to be installed.
- The layout of the equipment offered by GE, the dimensions given for the premises, the details provided for the pre-installation work and electrical power supply are given according to the information noted during on-site study and the wishes expressed by the customer.
- The room dimensions used to create the equipment layout may originate from a previous layout and may not be accurate as they may not have been verified on site. GE cannot take any responsibility for errors due to lack of information.
- Dimensions apply to finished surfaces of the room.
- Actual configuration may differ from options presented in some typical views or tables.
- If this set of final drawings has been approved by the customer, any subsequent modification of the site must be subject to further investigation by GE about the feasibility of installing the equipment. Any reservations must be noted.
- The equipment layout indicates the placement and interconnection of the indicated equipment components. There may be local requirements that could impact the placement of these components. It remains the customer's responsibility to ensure that the site and final equipment placement complies with all applicable local requirements.
- All work required to install GE equipment must be carried out in compliance with the building regulations and the safety standards of legal force in the country concerned.
- These drawings are not to be used for actual construction purposes. The company cannot take responsibility for any damage resulting therefrom.

CUSTOMER RESPONSIBILITIES

- It is the responsibility of the customer to prepare the site in accordance with the specifications stated in the final study. A detailed site readiness checklist is provided by GE. It is the responsibility of the customer to ensure all requirements are fulfilled and that the site conforms to all specifications defined in the checklist and final study. The GE Project Manager of Installation (PMI) will work in cooperation with the customer to follow up and ensure that actions in the checklist are complete, and if necessary, will aid in the rescheduling of the delivery and installation date.
- Prior to installation, a structrual engineer of record must ensure that the floor and ceiling is designed in such a way that the loads of the installed system can be securely borne and transferred. The layout of additional structural elements, dimensioning and the selection of appropriate installation methods are the sole responsibility of the structural engineer. Execution of load bearing structures supporting equipment on the ceiling, floor or walls are the customer's responsibility.

RADIO-PROTECTION

- Suitable radiological protection must be determined by a qualified radiological physicist in conformation with local regulations. GE does not take responsibility for the specification or provision of radio-protection.

THE UNDERSIGNED, HEREBY CERTIFIES THAT I HAVE READ AND APPROVED THE PLANS IN THIS DOCUMENT.		
DATE	NAME	SIGNATURE

GLOBAL SITE READINESS CHECKLIST (DI)

DOC1809666 Rev. 7

Site Ready Checks at Installation
EHS Site Requirements
Overall access route to the scan room free from obstruction / high hazards.
Enough space to store tools, equipment, parts, install waste and the general area free from obstruction and trip hazards.
Enough necessary facilities for the GE employees available.
No 3rd parties working in the area that may affect the safety of the installation activity.
Area free from any chemical, gas, dust, welding fume exposure and has painting been completed and dry.
All emergency routes identified, signed and clear from obstruction.
Accessible single source lockable panel that LOTO can be applied to for GE equipment installation (MDP and/or PDU).
There are no other conditions or hazards that you have observed or have been made aware of by the customer or contractors on site.
Required for Mechanical Install start
Room dimensions, including ceiling height, for all Exam, Equipment/Technical & Control rooms meets GE specifications.
Ceiling support structure, if indicated on the GE drawing, is in the correct location and at the correct height according to the Original Equipment Manufacturer specifications.
Levelness and spacing has been measured, and is ready for the installation of any GE supplied components.
Overhead support Structure (unistrut) has been confirmed with customer/contractor to meet required GE provided criteria.
Finished ceiling is installed. If applicable ceiling tiles installed per PMI discretion.
Floor levelness/flatness is measured and within tolerance, and there are no visible defects per GEHC specifications.
Entry door threshold meets PIM requirement.
Rooms that will contain equipment, including staging areas if applicable, are construction debris free. Precautions must be taken to prevent debris from entering rooms containing equipment.
Cable ways (floor/wall/ceiling/Access Flooring) are available for installation of GE cables are of correct length and diameter.
Cable ways routes per GE Final drawings and cable access openings areas installed at a time determined by GEHC PM. Surface floor duct can be installed at time of system installation.
Adequate room illumination installed and working.
Customer supplied countertops where GE equipment will be installed are in place.
Required for Calibration Start
HVAC systems Installed, and the site meets minimum environmental operational system requirements.
System power & grounding (PDB/MDP) is available as per GE specifications.
System power & grounding (PDB/MDP) is installed at point of final connection and ready to use. Lock Out Tag Out is available.
PMI to confirm all feeder wires and breaker are size appropriately. EPO installed if needed.
PMI to confirm with electrician all power and signal cables are well terminated ensuring there are no loose connections.
Network outlets installed.
Computer network available and working.
Lead doors and windows complete or scheduled to be installed. If applicable, radiation protection (shielding) finished & radioprotection regulatory approval for installation obtained.

Note: The details shown here are only an extract from DOC1809666. For the complete document please contact your PMI.

CUSTOMER SITE READINESS REQUIREMENTS

- Any deviation from these drawings must be communicated in writing to and reviewed by your local GE healthcare installation project manager prior to making changes.
- Make arrangements for any rigging, special handling, or facility modifications that must be made to deliver the equipment to the installation site. If desired, your local GE healthcare installation project manager can supply a reference list of rigging contractors.
- New construction requires the following;
  1. Secure area for equipment,
  2. Power for drills and other test equipment,
  3. Capability for image analysis,
  4. Restrooms.
- Provide for refuse removal and disposal (e.g. crates, cartons, packing)
- For CT, MR, PET/CT, and SPECT systems it is required to minimize vibrations within the scan room. It is the customer's responsibility to contract a vibration consultant/engineer to implement site design modifications to meet the GE vibration specification. Refer to the system preinstallation manual for vibration specifications.

ENVIRONMENTAL SPECIFICATIONS

MAGNETIC INTERFERENCE

In order to avoid interference on the system, static field limits from the surrounding environment must be less than <1 Gauss around the unit.

LIGHT REQUIREMENTS

For the electronic ballast of fluorescent lamp in exam room, the operating frequency should be above 42 kHz.

ACOUSTIC OUTPUT

Measured 1 m [3.28 ft] from any point in system.
In-use: less than 65 dBA
Stand-by: less than 60 dBA

ALTITUDE AND ATMOSPHERIC PRESSURE

Maximum height above sea level: 3000m [9843 ft]
Minimum depth below sea level: -30m [-98 ft]
Maximum atmospheric pressure: 106 kPa
Minimum atmospheric pressure: 70 kPa
Allowable in-use rate of change: <1.8 kPa/hour
Allowable storage rate of change (equipment in original shipping containters): <76 kPa/hour

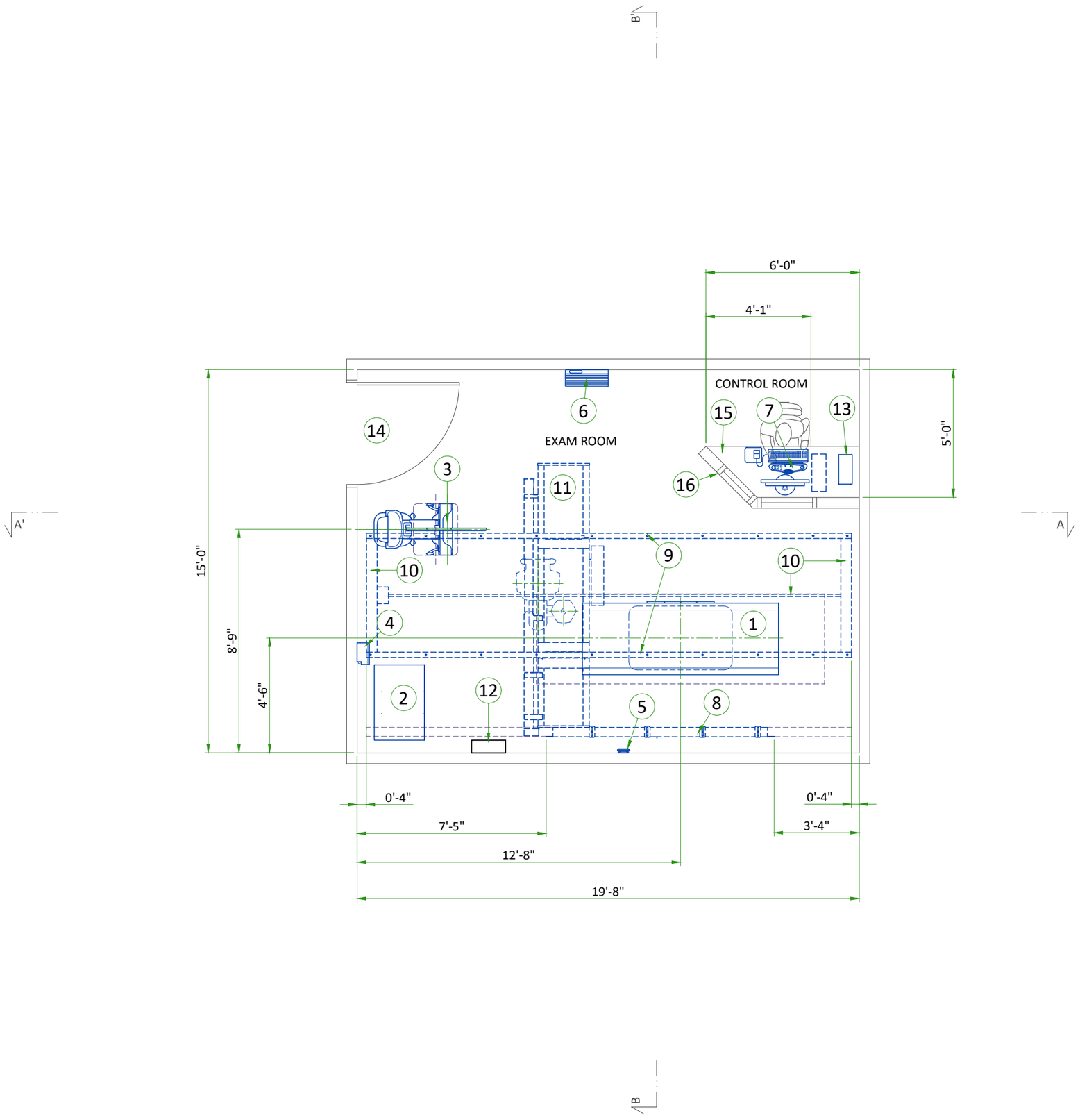

LEGEND			
A	GE Supplied	D	Available from GE
B	GE Supplied/contractor installed	E	Equipment existing in room
C	Customer/contractor supplied and installed	*	Item to be reinstalled from another site

BY	ITEM	DESCRIPTION	MAX HEAT OUTPUT (btu)*	WEIGHT (lbs)	MAX HEAT OUTPUT (W)*	WEIGHT (kg)
A	1	Patient Table		1367		620
A	2	System Cabinet		705		320
A	3	Standard Wall Stand	-	624	-	284
A/D	4	Tether Interface Box (TIB)	-	13.4	-	6
A	5	Access Point	-	1.3	-	0.6
A	6	Grid Holder	-	30.4	-	13.8
A	7	Operators Console	-	56.6	-	25.7
A	8	Cable Chain Support	-	-	-	-
A	9	Longitudinal Stationary Rail for OTS	-	138	-	63
A	10	Longitudinal Drive Belt and Anchor Rails	-	73.3	-	33.3
A	11	OTS with 3m Bridge	-	1437	-	652
B/D	12	Main Disconnect Panel	-	-	-	-
A/D	13	Partial UPS	-	76	-	34.5
C	14	Minimum opening for equipment delivery is 36 in. w x 66.9 in. h, contingent on a 96 in. corridor width (Note: Image Paste option requires an 80.9 in H opening)				
C	15	Counter top for equipment- provide grommeted openings as required to route cables				
C	16	Control wall, 7 Ft. high with lead glass viewing window				

*Refer to heat dissipation detail on page M1 for system heat load information

Applications

The chart shows the application possible to perform with the present equipment positioning, however the sales contract may not include it.

Auto Image Pasting at Wall Stand	YES

The following shots are NOT available in this layout

Rear to front cross table shot

EXAM ROOM HEIGHT

Finished ceiling height	MIN. 8'-6"	REC. 9'-5"

For Accessory Sales: (866) 281-7545 Options 1, 2, 1, 2 or mail to: gehcaccessorysales@ge.com

FRONT VIEW A-A'

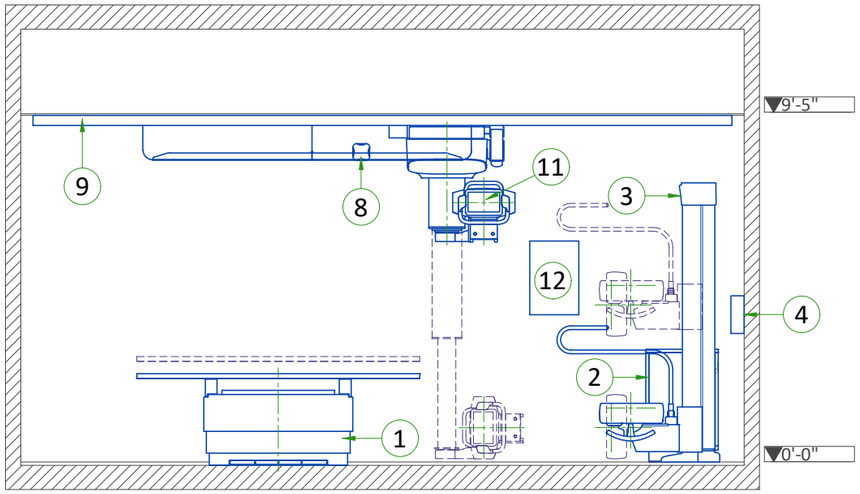

EXAM ROOM CEILING HEIGHTS

SYSTEM CONFIGURATION	WALLSTAND POSITION	SPECIFICATION	CEILING HEIGHT
2m or 3m Bridge	Any	Recommended	2850 mm [9'-4"]
Table + Extended WS	Foot	Range	2715-2887 mm [8'-11" to 9'-5"]
	Head	Range	2587-2887 mm [8'-6" to 9'-5"]
Table + Standard WS	Foot with OTS column 180°	Range	2587-2887 mm [8'-6" to 9'-5"]
	Head	Range	2845-2887 mm [9'-4" to 9'-5"]
Table + Non-tilting WS	Foot or head	Range	2587-2687 mm [8'-6" to 8'-10"]
	Front or rear	Range	2715-2887 mm [8'-11" to 9'-5"]

Note : measured from the floor to the top of the longitudinal rails

ADAPTER	APPLICABLE CEILING HEIGHT
Long (standard)	2587-2687 mm [8'-6" to 8'-10"]
Medium	2687-2787 mm [8'-10" to 9'-2"]
Short	2787-2887 mm [9'-2" to 9'-5"]

SIDE VIEW B-B'

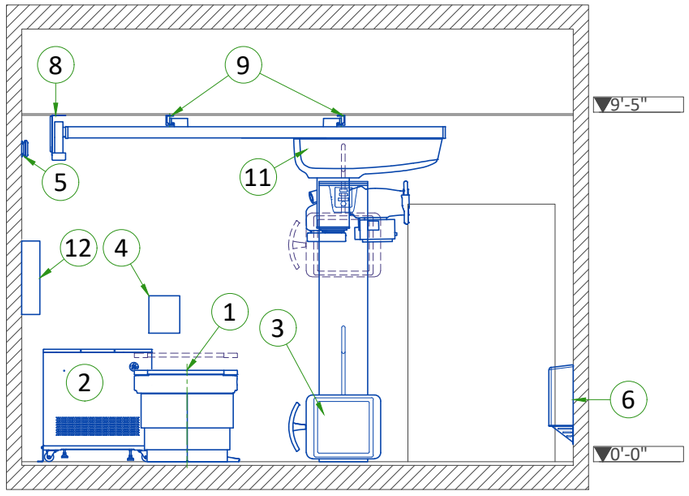

CLEARANCE AREAS

PERFORMANCE TABLE WITH STANDARD WALLSTAND

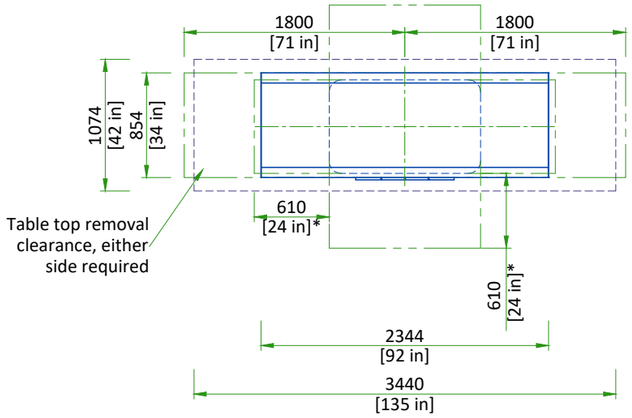

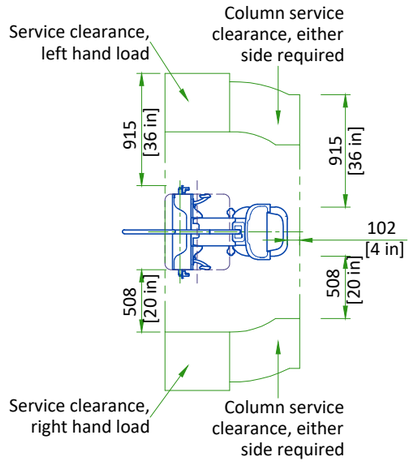

*Recommended service access clearance is 915 mm [3 ft].

SCALE 1:50

DELIVERY

THE CUSTOMER/CONTRACTOR SHOULD:

- Provide an area adjacent to the installation site for delivery and unloading of the GE equipment.
- Ensure that the dimensions of all doors, corridors, ceiling heights are sufficient to accommodate the movement of GE equipment from the delivery area into the definitive installation room.
- Ensure that access routes for equipment will accommodate the weights of the equipment and any transportation, lifting and rigging equipment.
- Ensure that all necessary arrangements for stopping and unloading on public or private property not belonging to the customer have been made.

DIMENSIONS OF DELIVERY WITH DOLLY TRANSPORT EQUIPMENT

EQUIPMENT	DIMENSIONS				WEIGHT
STANDARD WALLSTAND	LENGTH	2111 mm	83.1 in	464 kg + dolly	1023 lbs + dolly
	WIDTH	911 mm	35.9 in		
	HEIGHT	1860 mm	73.2 in		
PERFORMANCE TABLE	LENGTH	2400 mm	94.5 in	440 kg + dolly	970 lbs + dolly
	WIDTH	940 mm	37 in		
	HEIGHT	800 mm	31.5 in		
STATIONARY RAILS (5.79 m) (set of 2 rails)	LENGTH	5920 mm	233 in	62.6 kg+ fixture	138 lbs+ fixture
	WIDTH	178 mm	7 in		
	HEIGHT	76 mm	3 in		
OTS	LENGTH	900 mm	35.4 in	217 kg	478 lbs
	WIDTH	940 mm	37 in		
	HEIGHT	1020 mm	40 in		

ACCESS POINT POSITION

AP Wall-mounting position:

- There are 6 different positions available for AP wall-mounting.
- Install at more than 2.5 m [8.2 ft] height from floor level to avoid potential blocking from human or other obstacles.
- One Ethernet cable to Magic PC and one power cable to system cabinet are connected on the back of the AP.
- Use wall mount adapter included with AP.
- AP is only provided for wireless system, it is not included in Non Wireless Configuration system.

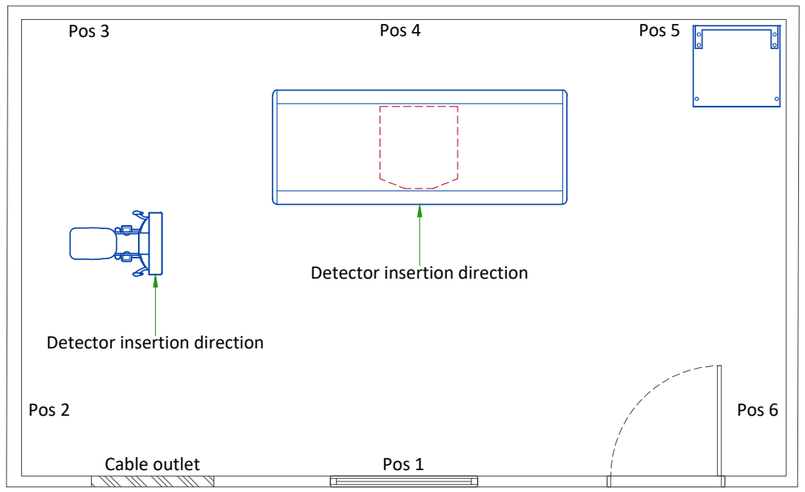

TEMPERATURE AND HUMIDITY SPECIFICATIONS

IN-USE CONDITIONS

	EXAM ROOM		CONTROL ROOM	
Temperature	Min	Max	Min	Max
	15°C [59°F]	32°C [89.6°F]	15°C [59°F]	32°C [89.6°F]
Temperature gradient	**< 10°C/h [< 50°F/h]**		**< 10°C/h [< 50°F/h]**	
Relative humidity (1)	20% to 75%		20% to 75%	
Humidity gradient	**< 30%/h**		**< 30%/h**	

STORAGE CONDITIONS

Temperature	-5°C [23°F] to +50°C [122°F]
Temperature gradient	**< 20°C/h [< 68°F/h]**
Relative humidity (1)	10% to 85%
Humidity gradient	**< 30%/h**

Storage longer than 90 days is not recommended.
(1) Non-condensing

AIR RENEWAL

According to local standards.

NOTE
In case of using air conditioning systems that have a risk of water leakage it is recommended not to install it above electric equipment or to take measures to protect the equipment from dropping water.

HEAT DISSIPATION DETAILS

SYSTEM POWER CONSUMPTION	HEAT OUTPUT			
	STANDBY		IN-USE	
Standby Power	1.0 kW	3412 BTU/hr		
Standby Current	2.0 A			
Continuous Power			2.2 kW	7507 BTU/hr
Continuous Current			4.5 A	

STRUCTURAL NOTES

- Methods of support for the steelwork that will permit attachment to structural steel or through bolts in concrete construction should be favored. Do not use concrete or masonry anchors in direct tension.
- All units that are wall mounted or wall supported are to be provided with supports where necessary. Wall supports are to be supplied and installed by the customer or his contractors. See plan for suggested locations.
- Control walls shall be constructed to minimum 2130mm (7'-0") high.
- Dimensions are to finished surfaces of room.
- Customers contractor must provide all penetrations in post tension floors.
- Customers contractor must provide and install any non-standard anchoring. Documents for standard anchoring methods are included with GE equipment drawings for geographic areas that require such documentation.
- Customers contractor must provide and install hardware for "through the floor" anchoring and/or any bracing under access floors. This contractor must also provide floor drilling that cannot be completed because of an obstruction encountered while drilling by the GE installer such as rebar etc.
- It is the customer's responsibility to perform any floor or wall penetrations that may be required. The customer is also responsible for ensuring that no subsurface utilities (e.g., electrical or any other form of wiring, conduits, piping, duct work or structural supports (i.e. post tension cables or rebar)) will interfere or come in contact with subsurface penetration operations (e.g. drilling and installation of anchors/screws) performed during the installation process. To ensure worker safety, GE installers will perform surface penetration operations only after the customer's validation and completion of the "GE surface penetration permit".
- Different anchor types are used to install the components of the system. Refer to Structural Requirements Section(s) of the Pre-Installation Manual for each anchor requirement.
- Refer to the Structural Requirements Section for the required minimum embedment.
- The ground surface must be flat and leveled, maximum tolerance for leveling is ±1.5 mm per 1 m (0.2 in per 10 feet). A grout pad provided by the contractor is required to meet this specification. The maximum pad thickness is 6.3 mm (0.25 in).

CEILING REQUIREMENTS

To allow installation of the stationary rail cross-members, clearance is required between the ends of the stationary rails and the walls.

It is recommended that sprinkler heads not be placed between the stationary rails. All sprinkler heads should be mounted so they do not extend downward more than 6.35 mm [1/4 in] from the ceiling while in the 'resting' position.

In addition, there should not be anything mounted in the ceiling (i.e. lights, A/C returns, etc) between the stationary rails. This is because the OTS longitudinal drive belt assembly is located on the movable bridge, approximately centered between the two stationary rails, and may come into contact with those ceiling-mounted items during normal use.

Stationary rails are designed for top (ceiling) mounting. Rails can be ordered and are supplied in the following sizes:

- 4115 mm [13'-6"]
- 4220 mm [14'-6"]
- 4720 mm [15'-6"]
- 5030 mm [16'-6"]
- 5330 mm [17'-6"]
- 5640 mm [18'-6"]
- 5790 mm [19'-0"]

The choice of length depends on room size, configuration, and the possible presence of obstructions.

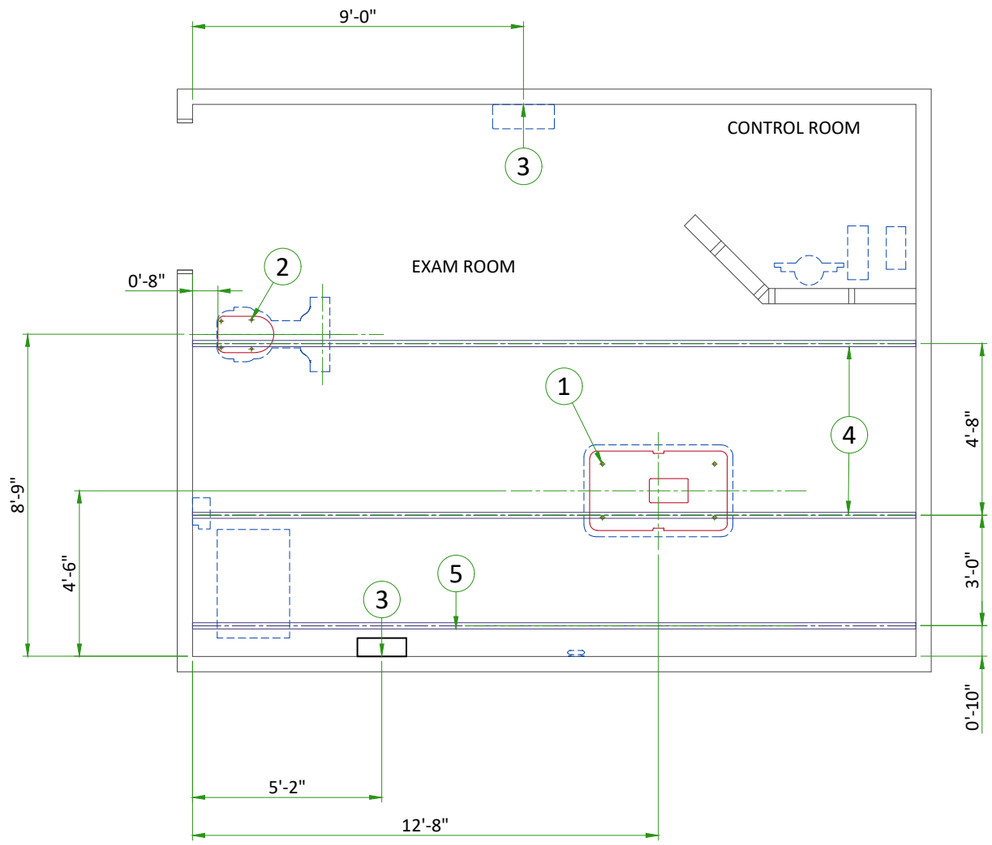

ITEM	DESCRIPTION
	(GE SUPPLIED / CONTRACTOR INSTALLED)
1	Area occupied by GE supplied table baseplate
2	Area occupied by GE supplied wall stand baseplate
	(CONTRACTOR SUPPLIED & INSTALLED)
3	Support backing, locate as shown.
4	Structural support in ceiling for fastening ceiling supported equipment. Supports to run continuous with no fittings extending below face of channel, run wall to wall, be parallel, square, and in the same horizontal plane, flush with the finished ceiling. Rails are mounted to these supports every 2'-2" and require 350 lbs. (597 lbs. In seismic regions) per bolt load. Methods of support that permit attachment to structural steel or through bolts in concrete should be favored. Do not use screw anchors in direct tension.
5	Structural support in ceiling for fastening cable drape rail. Supports to run continuous with no fittings extending below face of channel, run wall to wall, be parallel, square, and in the same horizontal plane, flush with the finished ceiling. Rails are mounted to these supports every 2'-2" and require 50 lbs. Per bolt load. Methods of support that permit attachment to structural steel or through bolts in concrete should be favored. Do not use screw anchors in direct tension.

TABLE ANCHORING

PERFORMANCE TABLE BASEPLATE

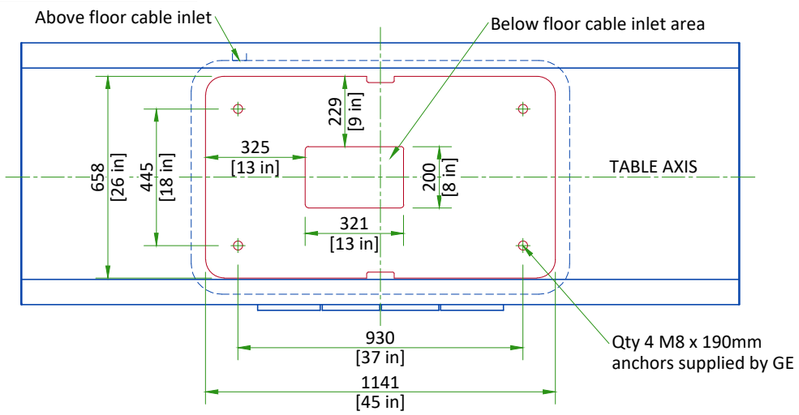

The floor bearing the system is recommended to be concrete and the thickness to be determined by a Structural Engineer to properly support the equipment loads. The supplied anchors require a minimum embedment of 90 mm [3.5 in] into the concrete. If the floor thickness is less than 95 mm [3.74 in], it is recommended that the unit be secured using a through-bolt method with a reinforcement plate on the back side.

FLOOR LEVELNESS

6mm [1/4 in] maximum variance over 3048mm [10 ft]

SCALE 1:20

OTS SUSPENSION RAILS MOUNTING SPECIFICATIONS

3 m BRIDGE

When a 22.7 kg [50 lb] force is applied vertically upward, downward or horizontally at any support rail mounting point, the attachment interface must not deflect more than 1.5 mm [1/16 in]

When a 136 kg [330 lb] load is applied vertically downward or horizontally at any stationary rail mounting point, the attachment interface must not deflect more than 1.5 mm [1/16 in]

660.4 ±1.5 mm
[26 ±1/16 in]

Cable takeup support rail mounting points

Stationary rail mounting points must be parallel within ±3 mm [±1/8 in]

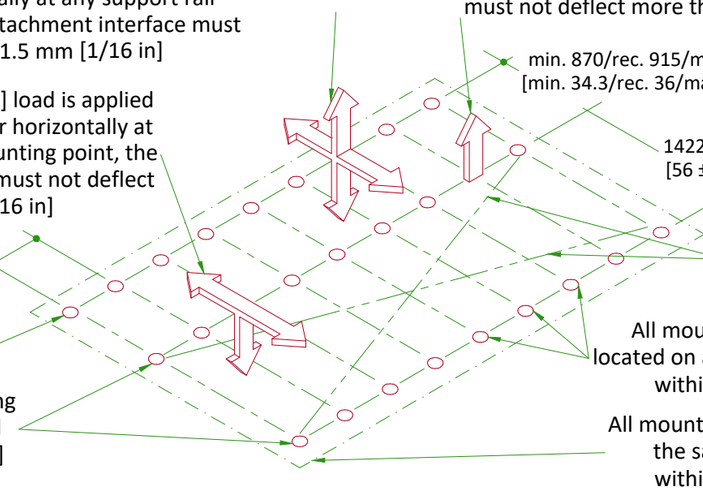

When a 45.4 kg [100 lb] force is applied vertically upward at any stationary rail mounting point, the attachment interface must not deflect more than 1.5 mm [1/16 in]

min. 870/rec. 915/max. 960 ±3 mm
[min. 34.3/rec. 36/max. 37.8 ±1/8 in]

1422 ±3 mm
[56 ±1/8 in]

Diagonals must be equal within ±6.5 mm [±1/4 in]

All mounting points must be located on a common centerline within ±1.5 mm [±1/16 in]

All mounting points must be in the same horizontal plane within ±2.4 mm [±3/32 in]

Distance between holes axis 660.4 mm [26 in], Maximum load per screw is 160 kg [353 lb], however each mounting screw must not "PULL OUT" or otherwise fail under a vertically downward dead load of 635 kg [1400 lb]. Bolts for mounting stationary rails on Unistrut or equivalent supplied by GE (1/2" - 13 headed bolts)

WALLSTAND ANCHORING

WALLSTAND BASE

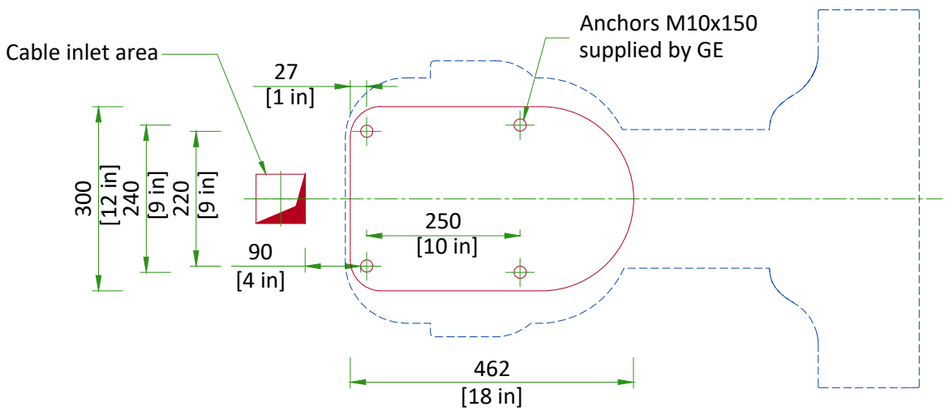

Concrete area for wall stand installation should be 1 m² [39.37 ft²].
The floor levelness tolerance of the floor surface that the wallstand will rest on is 6 mm [1/4 in] over a 3048 mm [10 ft] distance.

SCALE 1:10

FOCAL SPOT TRAVEL WITH 3M BRIDGE

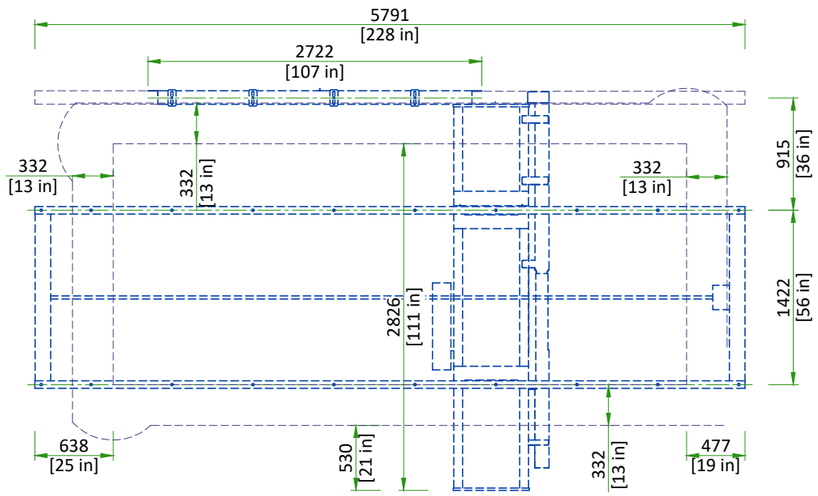

NOT TO SCALE

Note: Focal Spot Travel depends on the length of the bridge and rails.

XT RADIOGRAPHIC SUSPENSION, INBOARD MOUNTING

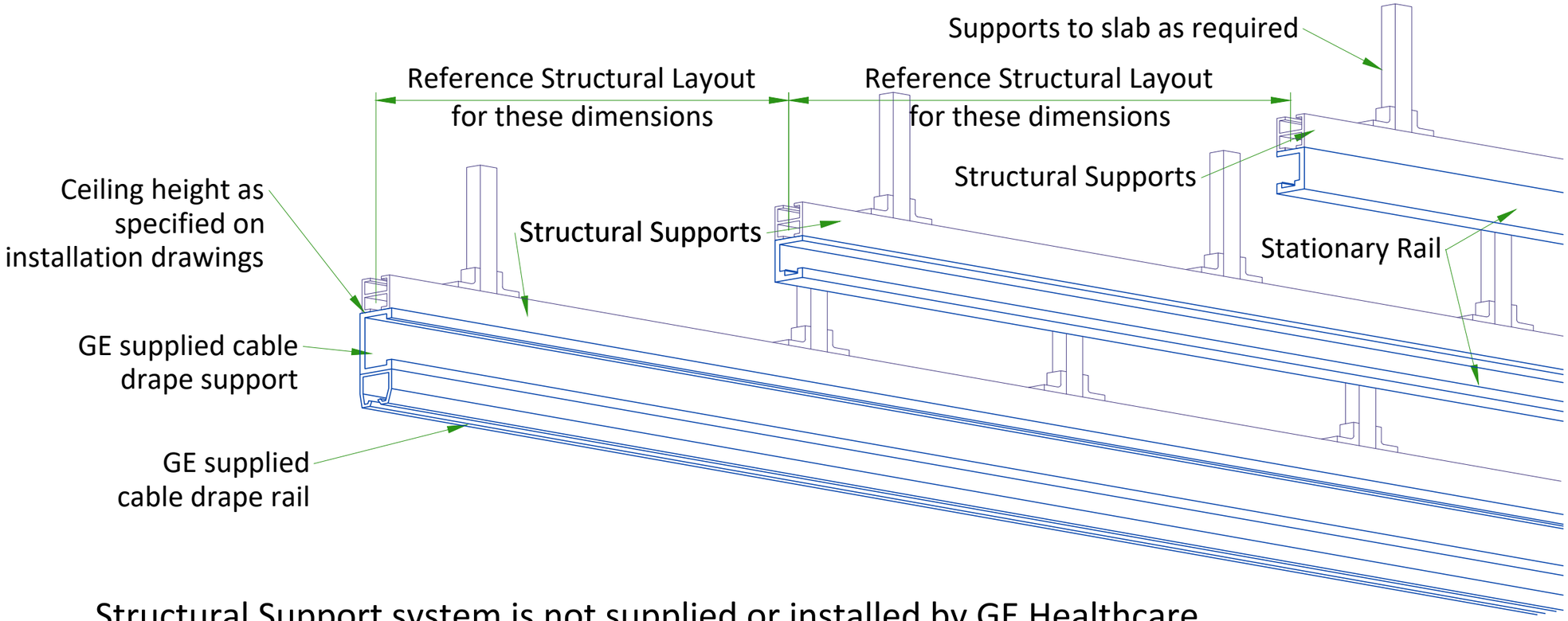

Structural Support system is not supplied or installed by GE Healthcare

DETAIL 1

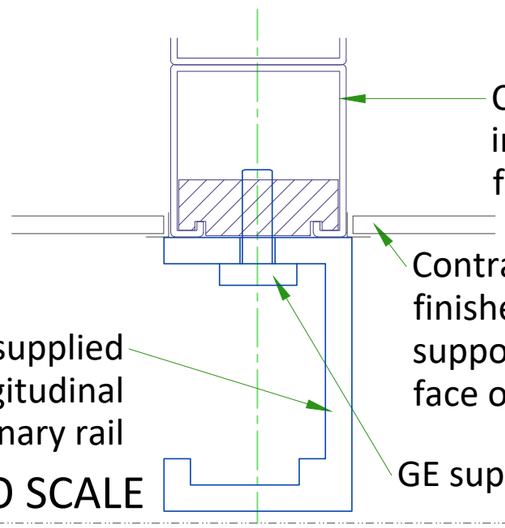

NOT TO SCALE

DETAIL 2

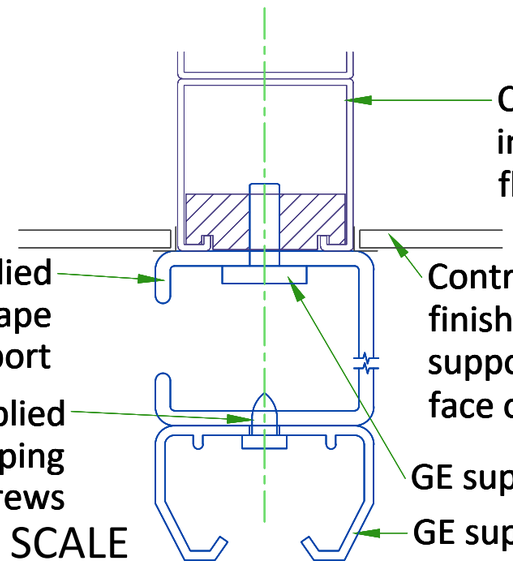

NOT TO SCALE

CONNECTIVITY REQUIREMENTS

Broadband Connections are necessary during the installation process and going forward to ensure full support from the Engineering Teams for the customers system. Maximum performance and availability for the customers system is maintained and closely monitored during the lifetime of the system. Proactive and reactive maintenance is available utilising the wide range of digital tools using the connectivity solutions listed below:

- Site-to-Site VPN/GE Solution
- Site-to-Site VPN/Customer Solution
- Connection through Dedicated Service Network
- Internet Access - connectivity for InSite 2.0

The requirements for these connectivity solutions are explained in the broadband solutions catalogue (separate document).

ELECTRICAL NOTES

1. All wires specified shall be copper stranded, flexible, thermo-plastic, color coded, cut 10 foot long at outlet boxes, duct termination points or stubbed conduit ends. All conductors, power, signal and ground, must be run in a conduit or duct system. Electrical contractor shall ring out and tag all wires at both ends. Wire runs must be continuous copper stranded and free from splices.

1.1. Aluminum or solid wires are not allowed.

2. Wire sizes given are for use of equipment. Larger sizes may be required by local codes.
3. It is recommended that all wires be color coded, as required in accordance with national and local electrical codes.
4. Conduit sizes shall be verified by the architect, electrical engineer or contractor, in accordance with local or national codes.
5. Convenience outlets are not illustrated. Their number and location are to be specified by others. Locate at least one convenience outlet close to the system control, the power distritbution unit and one on each wall of the procedure room. Use hospital approved outlet or equivalent.
6. General room illumination is not illustrated. Caution should be taken to avoid excessive heat from overhead spotlights. Damage can occur to ceiling mounting components and wiring if high wattage bulbs are used. Recommend low wattage bulbs no higher than 75 watts and use dimmer controls (except MR). Do not mount lights directly above areas where ceiling mounted accessories will be parked.
7. Routing of cable ductwork, conduits, etc., must run direct as possible otherwise may result in the need for greater than standard cable lengths (refer to the interconnection diagram for maximum usable lengths point to point).
8. Conduit turns to have large, sweeping bends with minimum radius in accordance with national and local electrical codes.
9. A special grounding system is required in all procedure rooms by some national and local codes. It is recommended in areas where patients might be examined or treated under present, future, or emergency conditions. Consult the governing electrical code and confer with appropriate customer administrative personnel to determine the areas requiring this type of grounding system.
10. The maximum point to point distances illustrated on this drawing must not be exceeded.
11. Physical connection of primary power to GE equipment is to be made by customers electrical contractor with the supervision of a GE representative. The GE representative would be required to identify the physical connection location, and insure proper handling of GE equipment.
12. GEHC conducts power audits to verify quality of power being delivered to the system. The customer's electrical contractor is required to be available to support this activity.

- All junction boxes, conduit, duct, duct dividers, switches, circuit breakers, cable tray, etc., are to be supplied and installed by customers electrical contractor.
- Conduit and duct runs shall have sweep radius bends
- Conduits and duct above ceiling or below finished floor must be installed as near to ceiling or floor as possible to reduce run length.
- Ceiling mounted junction boxes illustrated on this plan must be installed flush with finished ceiling.
- All ductwork must meet the following requirements:

1.Ductwork shall be metal with dividers and have removable, accessible covers.
2.Ductwork shall be certified/rated for electrical power purposes.
3.Ductwork shall be electrically and mechanically bonded together in an approved manner.
4.PVC as a substitute must be used in accordance with all local and national codes.

- All openings in raceway and access flooring are to be cut out and finished off with grommet material by the customers contractor.
- General contractor to insert pull cords for all cable run conduits between the equipment room and the operators control room.
- 10 foot pigtails at all junction points.
- Grounding is critical to equipment function and patient safety. Site must conform to wiring specifications shown on this plan.

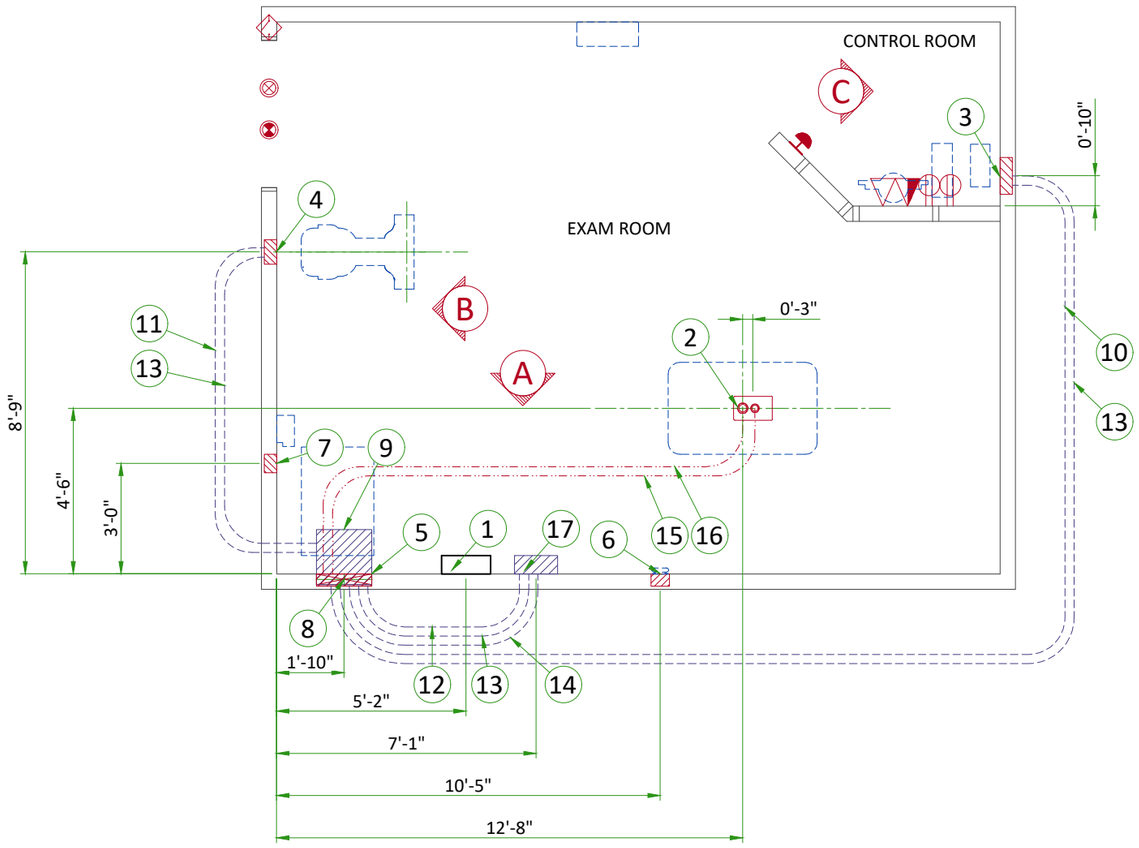

ELECTRCAL LAYOUT ITEM LIST	
1	Main Disconnect Panel
2	Suitable bushings & locknuts (Table)
3	Flush 12"x6"x4" [300 x 150 x 100] box (Control)
4	Flush box - size per local code (Chest Unit)
5	Flush box - size per local code (Generator)
6	Flush box - size per local code (Access Point)
7	Flush box - size per local code (TIB)
8	18" x 3 1/2" [450 x 100] Flush vertical wall duct with minimum 2 dividers
9	Box above ceiling size per local code
10	One 1" [25] conduit above ceiling
11	One 1 1/2" [38] conduit above ceiling
12	One 2" [50] conduit above ceiling
13	One 2 1/2" [64] conduit above ceiling
14	One 3 1/2" [89] conduit above ceiling
15	One 2" [50] conduit below floor
16	One 2 1/2" [64] conduit below floor
17	Flush box in ceiling size per local code (OTS)

ITEM	Outlet Legend for GE Equipment
	System emergency off (SEO), (recommended height 1.2m [48"] above floor)
	X-Ray room warning light control panel
	X-Ray ON lamp (L1) - 24V
	Door interlock switch (needed only if required by state/local codes)
	Duplex hospital grade, dedicated wall outlet 120-v, single phase power
	Dedicated telephone line(s)
	Network outlet

Additional Conduit Runs
(Contractor Supplied and Installed)

From (Bubble # / Item)		To (Bubble # / Item)		Qty	Size In.	Size mm
3 Phase Power		1	Main Disconnect	1	As req'd	As req'd
1	Main Disconnect		Emergency Off	1	1/2	13
		8	Systems Cabinet	1	As req'd	As req'd
Warning Light			Warning Light Control	1	1/2	13
1 Phase Power				1	As req'd	As req'd
8	Systems Cabinet			1	1/2	13
			Door Switch	1	1/2	16
		5	TIB	1	2	53
		4	Access Point	1	1	27
3	Operators Console	5	TIB	1	1	27
		4	Access Point	1	2	53

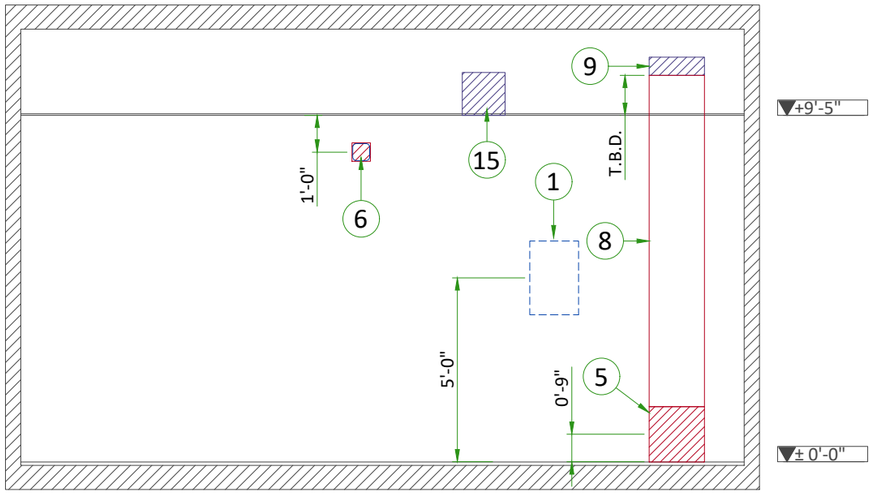
+9'-5"
± 0'-0"
9
15
1
6
8
5
1'-0"
T.B.D.
5'-0"
0'-9"

A

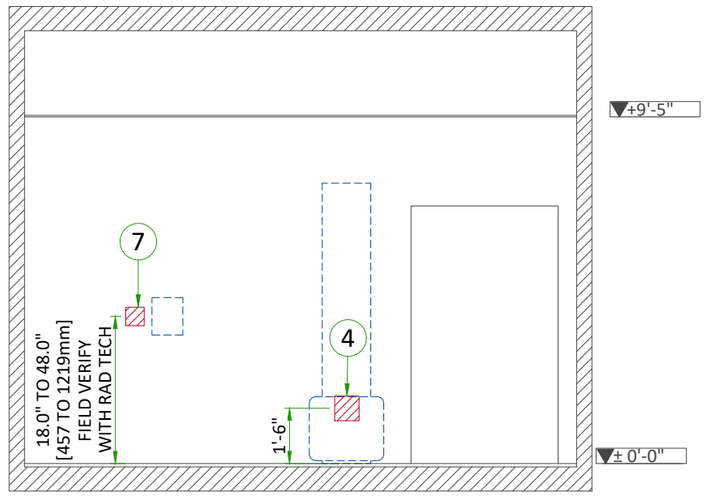
+9'-5"
± 0'-0"
7
4
18.0" TO 48.0"
[457 TO 1219mm]
FIELD VERIFY
WITH RAD TECH
1'-6"

B

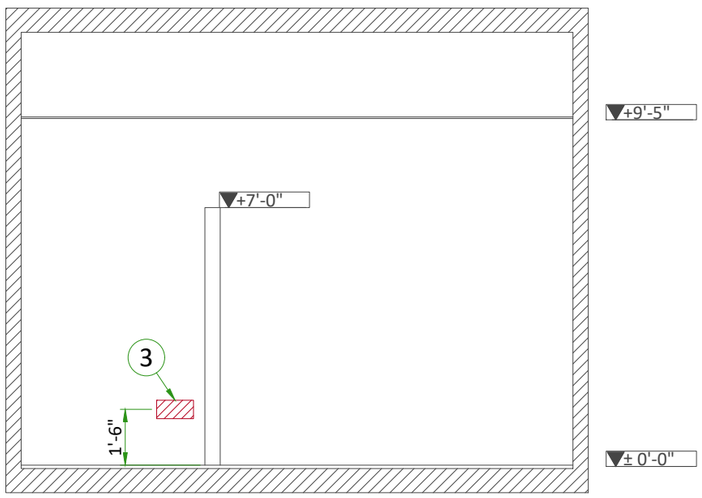
+9'-5"
+7'-0"
± 0'-0"
3
1'-6"

C

INTERCONNECTIONS

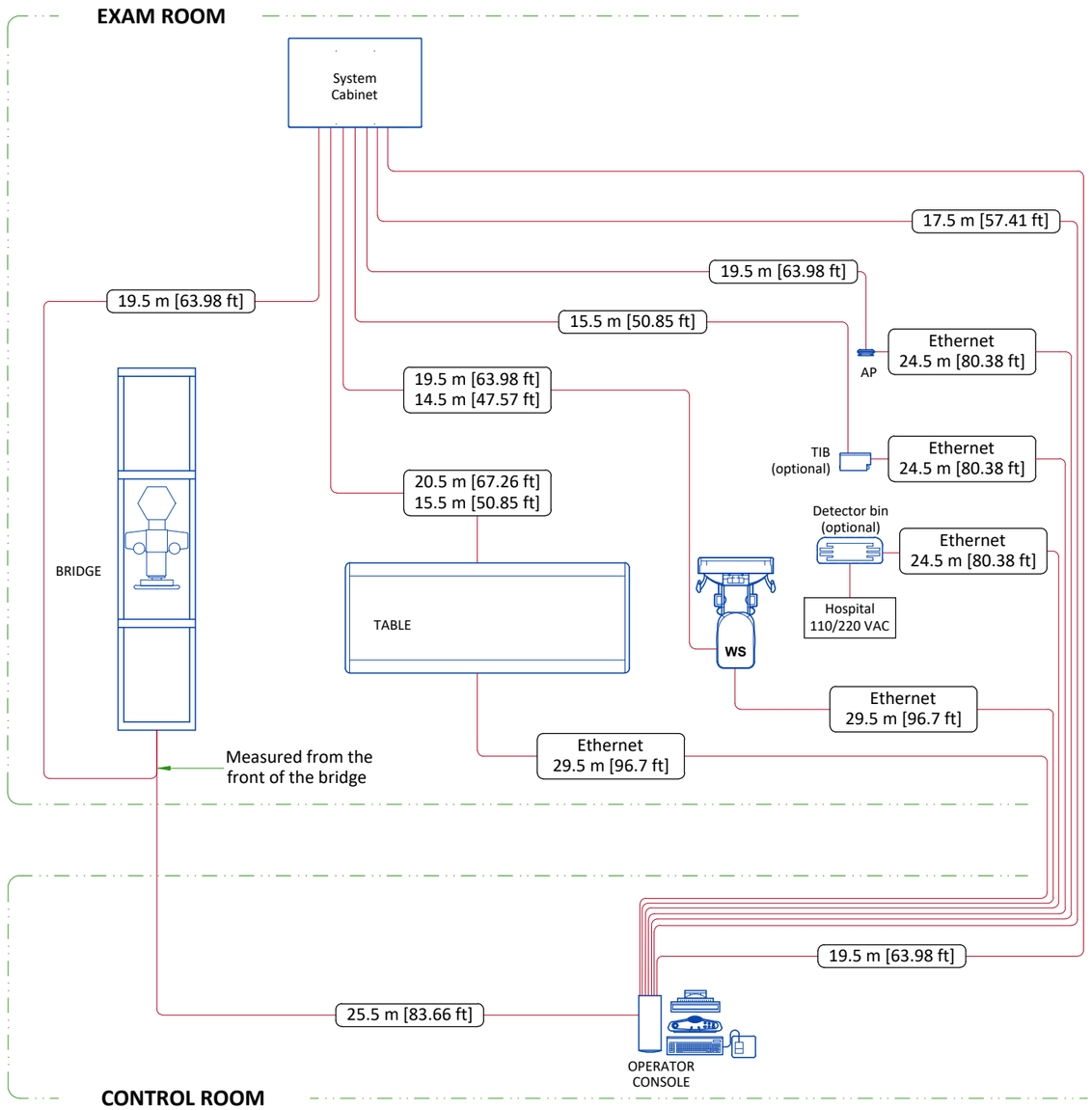

.....m [.....ft] - Long usable length
.....m [.....ft] - Standard usable length

TYPICAL CABLE MANAGEMENT

CONDUIT IN THE FLOOR

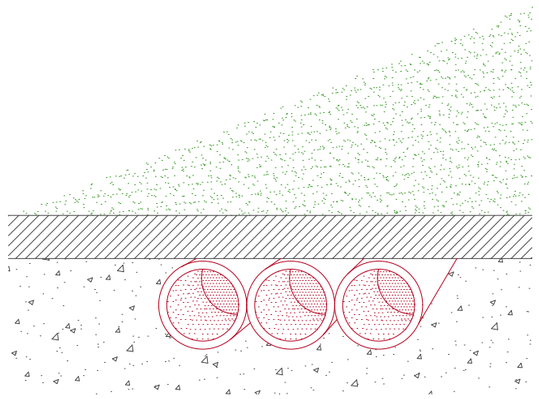

VERTICAL DUCT ON WALL

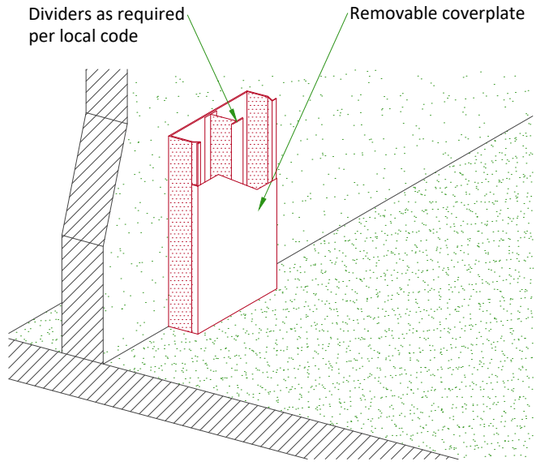

NOT TO SCALE

EXAM ROOM WARNING LIGHT AND DOOR INTERLOCK

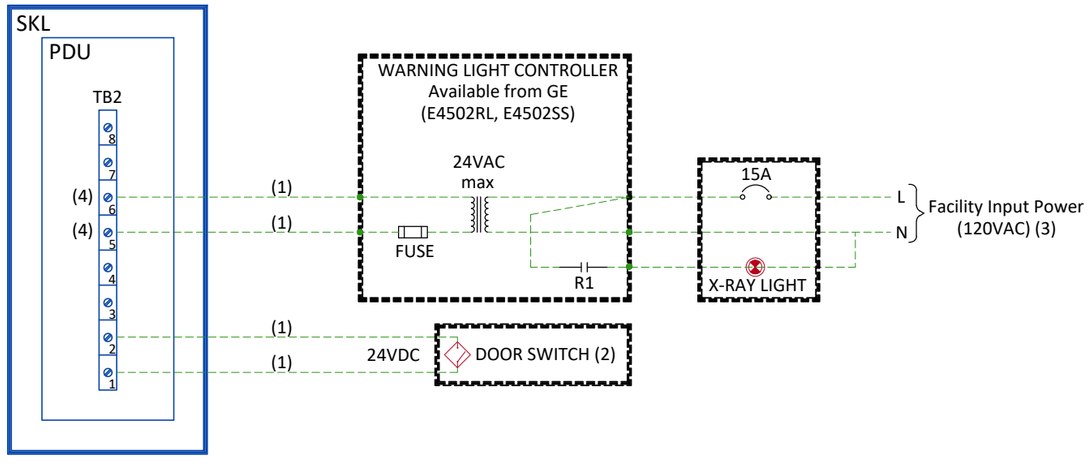

Notes :

(1) Wire size: 2mm² [14 AWG] at 24V
(2) Door Interlock circuit is jumpered out if a door switch is not provided.
(3) Grounding not shown on the detail, but must comply with local codes.
(4) Normally open relay contact in cabinet

Cable SUPPLIED BY CUSTOMER
Cable SUPPLIED BY GE
Equipment SUPPLIED BY CUSTOMER
Equipment SUPPLIED BY GE

PDU Power Distribution Unit
SKL System Cabinet
TB2 Terminal Block 2

Fuse
Relay coil and contact - normally open (de-energized state)
Control power transformer
Circuit breaker

POWER REQUIREMENTS

POWER SUPPLY	**380/400/415/440/460/480V ±10%, THREE-PHASE + G**
FREQUENCIES	**50/60Hz ± 3Hz**
POWER DEMAND	**125kVA**
MAXIMUM LINE RESISTANCE PER 2 PHASES (Ohm)	**380V : 0.096/ 400V : 0.100 / 415V : 0.113** **440V : 0.125 / 480V : 0.150**

- Power supply should come into a power distribution box (PDB/MDP) containing the protective units and controls.
- The section of the supply cable should be calculated in accordance with its length and the maximum permissible voltage drops.
- There must be discrimination between supply cable protective material at the beginning of the installation (main low-voltage transformer side) and the protective devices in the PDB/MDP.

SUPPLY CHARACTERISTICS

- Power input must be separated from any others which may generate transients (elevators, air conditioning, radiology rooms equipped with high speed film changers...)
- All equipment (lighting, power outlets, etc...) installed with GE system components must be powered separately.

GROUND SYSTEM

- Equipotential : the equipotential link will be by means of an equipotential bar. This equipotential bar should be connected to the protective earth conductors in the ducts of the non GE cableways and to additional equipotential connections linking up all the conducting units in the rooms where GE units are located.

CABLES

- Power and cable installation must comply with the distribution diagram below.
- All cables must be isolated and flexible.
- Cable color codes must comply with standards for electrical installation.
- Cables for signals and remote control (Y, SEO, L...) will go to PDB with a pigtail length of 1.5m [4.9 ft], and will be connected during installation. Each conductor will be identified and isolated (screw connector).

CABLEWAYS

The general rules for laying cableways should meet the conditions laid down in current standards and regulations, with regard to:

- Protecting cables against water (cableways should be waterproof)
- Protecting cables against abnormal temperatures (proximity to heating pipes or ducts)
- Protecting cables against temperature shocks
- Replacing cables (cableways should be large enough for cables to be replaced) metal cableways should be grounded.

POWER DISTRIBUTION

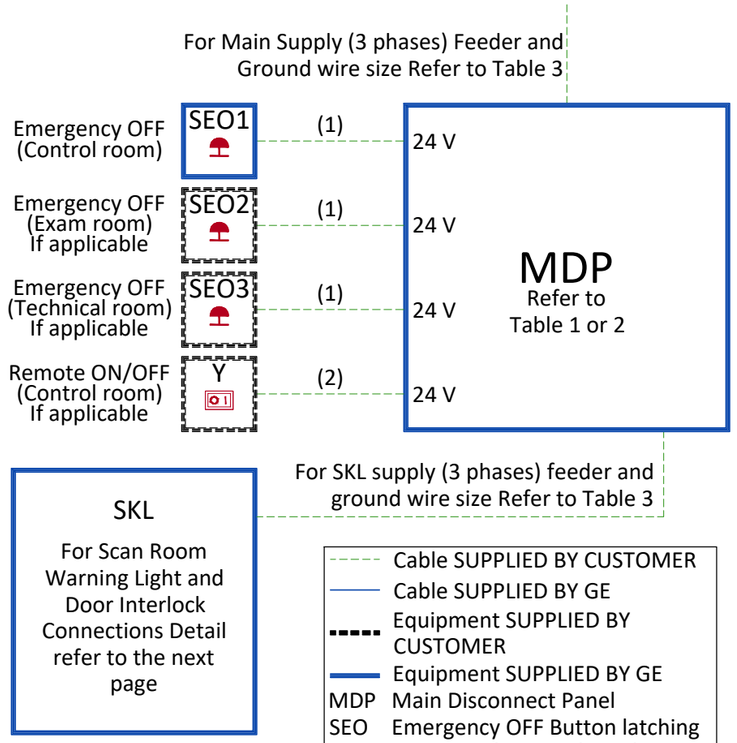

Cable SUPPLIED BY CUSTOMER
Cable SUPPLIED BY GE
Equipment SUPPLIED BY CUSTOMER
Equipment SUPPLIED BY GE
MDP Main Disconnect Panel
SEO Emergency OFF Button latching twist-to release style with two normally closed (NC) contacts
SKL System Cabinet
Y System Remote Control with "ON" and "OFF" buttons

Table 1:

GE Supplied Main Disconnect Panel (MDP)

Region	CAT number	Amps
EU EAGM	E46001RY/LY	110
LATAM USCAN	E4502RP	90*
	E4502ST	80
	E4502RS	110
	E4502RT	150
	E4502JH	225
	E4502RY	125*
United Kingdom, Ireland	E46001TC-PD	

*with auto restart

Table 2:

Recommended minimum customer supplied Main Disconnect Panel (MDP) rating

Power/Voltage	80 kW
380 V	95 A
400 V	90 A
415 V	85 A
440 V	82 A
460 V	78 A
480 V	75 A

Table 3:

Feeder Table - JEDI 80kW Systems Cabinet

· Calculations based on nominal voltage.
· Recommended feeder sizes from distribution transformer to the power cabinet.
· Neutral must be terminated inside the Main Disconnect Panel (MDP) and not at any GE cabinet

Wire run length ft (m)	Minimum Wire Size, AWG or MCM (mm²)/VAC					
	380 VAC	400 VAC	420 VAC	440 VAC	460 VAC	480 VAC
50 (15)	2 (35)*	2 (35)*	2 (35)*	2 (35)*	2 (35)*	2 (35)*
100 (30)	2 (35)*	2 (35)*	2 (35)*	2 (35)*	2 (35)*	2 (35)*
150 (46)	1/0 (55)	1 (45)	1 (45)	2 (35)*	2 (35)*	2 (35)*
200 (61)	2/0 (70)	2/0 (70)	1/0 (55)	1/0 (55)	1 (45)	1 (45)
250 (76)	3/0 (85)	3/0 (85)	2/0 (70)	2/0 (70)	1/0 (55)	1/0 (55)
300 (91)	4/0 (100)	4/0 (100)	3/0 (85)	3/0 (85)	2/0 (70)	2/0 (70)
350 (107)	300M (150)	250M (125)	4/0 (100)	4/0 (100)	3/0 (85)	3/0 (85)
400 (122)	350M (175)	300M (150)	250M (125)	4/0 (100)	4/0 (100)	3/0 (85)
450 (138)	400M (200)	350M (175)	300M (150)	250M (125)	250M (125)	4/0 (100)

*minimum wire size for circuit breaker, based on recommended overcurrent protection

Grounding

The grounding conductor will be of same size as the feeder. This ground will run from the equipment back to the facility power source/main grounding point and always travel in the same conduit with the feeders and neutral.

Notes :

(1) Wire size: 2x1.5mm² [16AWG]
(2) Wire size: 6x2mm² [14AWG] and 1x2mm² [14AWG] GND