REV	DATE	MODIFICATIONS
D	24/May/2021	Initial release per PIM revision 7
C	02/Jun/2020	Initial release per PIM revision 6
B	12/May/2020	Initial release per PIM revision 5
A	25/Jan/2019	Initial release per PIM revision 4

Typical

---

01 - C1 - Cover Sheet
02 - C2 - Disclaimer - Site Readiness
03 - A1 - General Notes
04 - A2 - Equipment Layout
05 - A3 - Equipment Details (1)
06 - A4 - Equipment Details (2)
07 - A5 - Delivery
08 - S1 - Structural Notes
09 - S2 - Structural Layout
10 - S3 - Structural Details (1)
11 - S4 - Structural Details (2)
12 - M1 - HVAC
13 - E1 - Electrical Notes
14 - E2 - Electrical Layout
15 - E3 - Electrical Elevations
16 - E4 - Interconnections
17 - E6 - Power Requirements

GE Healthcare

PRECISION 600FP
FINAL STUDY

A mandatory component of this drawing set is the GE Healthcare Pre Installation manual. Failure to reference the Pre Installation manual will result in incomplete documentation required for site design and preparation.
Pre Installation documents for GE Healthcare products can be accessed on the web at: www.gehealthcare.com/siteplanning

GE does not take responsibility for any damages resulting from changes on drawings made by others. Errors may occur by not referring to the complete set of final issue drawing. GE cannot accept responsibility for any damage due to the partial use of GE final issue drawings, however caused. All dimensions are in millimeters unless otherwise specified. Do not scale from printed pdf files. GE accepts no responsibility or liability for defective work due to scaling from these drawings.

Drawn by	Verified by	Concession	S.O. (GON)	PIM Manual	Rev
RET	REK	-	----	5756081-1EN	7

Format	Scale	File Name	Date	Sheet
A3	1/4"=1'-0"	EN-RF-TYP-PRECISION_600FP-WEB.DWG	12/Nov/2021	01/17

DISCLAIMER

GENERAL SPECIFICATIONS

- GE is not responsible for the installation of developers and associated equipment, lighting, cassette trays and protective screens or derivatives not mentioned in the order.
- The final study contains recommendations for the location of GE equipment and associated devices, electrical wiring and room arrangements. When preparing the study, every effort has been made to consider every aspect of the actual equipment expected to be installed.
- The layout of the equipment offered by GE, the dimensions given for the premises, the details provided for the pre-installation work and electrical power supply are given according to the information noted during on-site study and the wishes expressed by the customer.
- The room dimensions used to create the equipment layout may originate from a previous layout and may not be accurate as they may not have been verified on site. GE cannot take any responsibility for errors due to lack of information.
- Dimensions apply to finished surfaces of the room.
- Actual configuration may differ from options presented in some typical views or tables.
- If this set of final drawings has been approved by the customer, any subsequent modification of the site must be subject to further investigation by GE about the feasibility of installing the equipment. Any reservations must be noted.
- The equipment layout indicates the placement and interconnection of the indicated equipment components. There may be local requirements that could impact the placement of these components. It remains the customer's responsibility to ensure that the site and final equipment placement complies with all applicable local requirements.
- All work required to install GE equipment must be carried out in compliance with the building regulations and the safety standards of legal force in the country concerned.
- These drawings are not to be used for actual construction purposes. The company cannot take responsibility for any damage resulting therefrom.

CUSTOMER RESPONSIBILITIES

- It is the responsibility of the customer to prepare the site in accordance with the specifications stated in the final study. A detailed site readiness checklist is provided by GE. It is the responsibility of the customer to ensure all requirements are fulfilled and that the site conforms to all specifications defined in the checklist and final study. The GE Project Manager of Installation (PMI) will work in cooperation with the customer to follow up and ensure that actions in the checklist are complete, and if necessary, will aid in the rescheduling of the delivery and installation date.
- Prior to installation, a structrual engineer of record must ensure that the floor and ceiling is designed in such a way that the loads of the installed system can be securely borne and transferred. The layout of additional structural elements, dimensioning and the selection of appropriate installation methods are the sole responsibility of the structural engineer. Execution of load bearing structures supporting equipment on the ceiling, floor or walls are the customer's responsibility.

RADIO-PROTECTION

- Suitable radiological protection must be determined by a qualified radiological physicist in conformation with local regulations. GE does not take responsibility for the specification or provision of radio-protection.

THE UNDERSIGNED, HEREBY CERTIFIES THAT I HAVE READ AND APPROVED THE PLANS IN THIS DOCUMENT.		
DATE	NAME	SIGNATURE

GLOBAL SITE READINESS CHECKLIST (DI)

DOC1809666 Rev. 7

Site Ready Checks at Installation
EHS Site Requirements
Overall access route to the scan room free from obstruction / high hazards.
Enough space to store tools, equipment, parts, install waste and the general area free from obstruction and trip hazards.
Enough necessary facilities for the GE employees available.
No 3rd parties working in the area that may affect the safety of the installation activity.
Area free from any chemical, gas, dust, welding fume exposure and has painting been completed and dry.
All emergency routes identified, signed and clear from obstruction.
Accessible single source lockable panel that LOTO can be applied to for GE equipment installation (MDP and/or PDU).
There are no other conditions or hazards that you have observed or have been made aware of by the customer or contractors on site.
Required for Mechanical Install start
Room dimensions, including ceiling height, for all Exam, Equipment/Technical & Control rooms meets GE specifications.
Ceiling support structure, if indicated on the GE drawing, is in the correct location and at the correct height according to the Original Equipment Manufacturer specifications.
Levelness and spacing has been measured, and is ready for the installation of any GE supplied components.
Overhead support Structure (unistrut) has been confirmed with customer/contractor to meet required GE provided criteria.
Finished ceiling is installed. If applicable ceiling tiles installed per PMI discretion.
Floor levelness/flatness is measured and within tolerance, and there are no visible defects per GEHC specifications.
Entry door threshold meets PIM requirement.
Rooms that will contain equipment, including staging areas if applicable, are construction debris free. Precautions must be taken to prevent debris from entering rooms containing equipment.
Cable ways (floor/wall/ceiling/Access Flooring) are available for installation of GE cables are of correct length and diameter.
Cable ways routes per GE Final drawings and cable access openings areas installed at a time determined by GEHC PM. Surface floor duct can be installed at time of system installation.
Adequate room illumination installed and working.
Customer supplied countertops where GE equipment will be installed are in place.
Required for Calibration Start
HVAC systems Installed, and the site meets minimum environmental operational system requirements.
System power & grounding (PDB/MDP) is available as per GE specifications.
System power & grounding (PDB/MDP) is installed at point of final connection and ready to use. Lock Out Tag Out is available.
PMI to confirm all feeder wires and breaker are size appropriately. EPO installed if needed.
PMI to confirm with electrician all power and signal cables are well terminated ensuring there are no loose connections.
Network outlets installed.
Computer network available and working.
Lead doors and windows complete or scheduled to be installed. If applicable, radiation protection (shielding) finished & radioprotection regulatory approval for installation obtained.

Note: The details shown here are only an extract from DOC1809666. For the complete document please contact your PMI.

CUSTOMER SITE READINESS REQUIREMENTS

- Any deviation from these drawings must be communicated in writing to and reviewed by your local GE healthcare installation project manager prior to making changes.
- Make arrangements for any rigging, special handling, or facility modifications that must be made to deliver the equipment to the installation site. If desired, your local GE healthcare installation project manager can supply a reference list of rigging contractors.
- New construction requires the following;
  1. Secure area for equipment,
  2. Power for drills and other test equipment,
  3. Capability for image analysis,
  4. Restrooms.
- Provide for refuse removal and disposal (e.g. crates, cartons, packing)
- For CT, MR, PET/CT, and SPECT systems it is required to minimize vibrations within the scan room. It is the customer's responsibility to contract a vibration consultant/engineer to implement site design modifications to meet the GE vibration specification. Refer to the system preinstallation manual for vibration specifications.

ENVIRONMENTAL SPECIFICATIONS

MAGNETIC INTERFERENCE

- Digital flat panel must be located in ambient static magnetic fields of less than 1 gauss to guarantee specified imaging performance.
- X-Ray tubes must be located in ambient static magnetic fields of less than 10 gauss to guarantee specified performance.
- System electronics must be located in ambient static magnetic fields of less than 10 gauss to guarantee data integrity.
- Operators console equipment must be located in ambient static magnetic fields of less than 10 gauss to obtain specified geometric linearity.

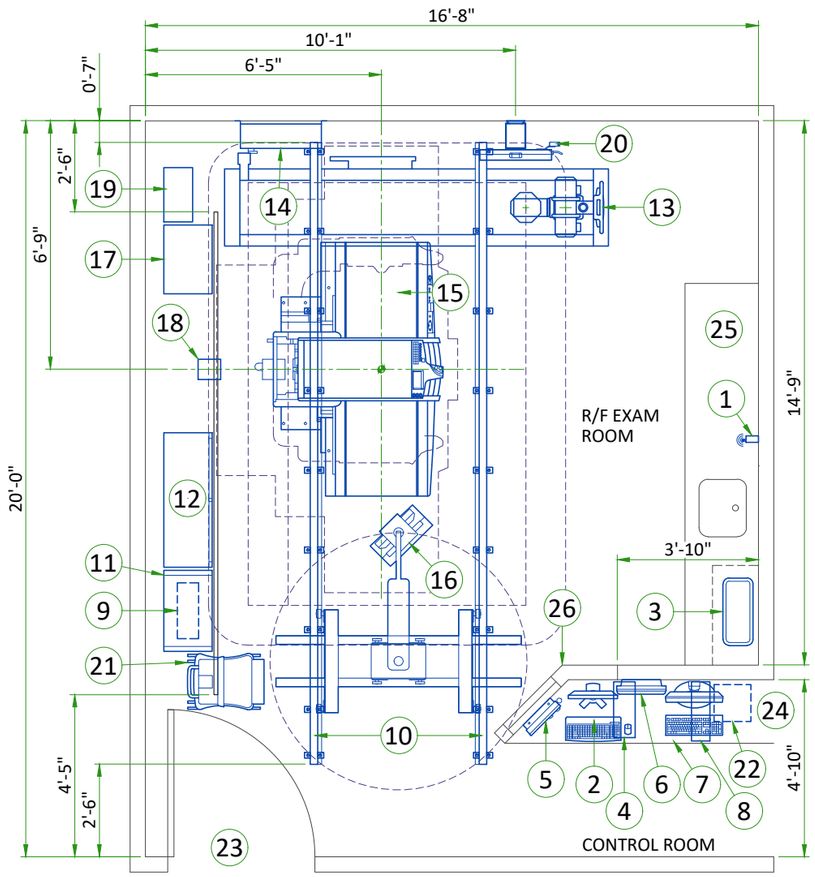

LEGEND			
A	GE Supplied	D	Available from GE
B	GE Supplied/contractor installed	E	Equipment existing in room
C	Customer/contractor supplied and installed	*	Item to be reinstalled from another site

BY	ITEM	DESCRIPTION	MAX HEAT OUTPUT (btu)	WEIGHT (lbs)	MAX HEAT OUTPUT (W)	WEIGHT (kg)
A	1	Aero DR access point (location to be determined by field at install)	-	2	-	1
A	2	Aero DR controller (ADR)	-	37	-	17
A	3	Aero DR docking station/battery charger	-	15	-	7
A	4	Aero DR interface unit (I/F)	-	24	-	11
A	5	Generator control panel (GCP)	-	17	-	8
A/D	6	Live reference monitor (LRM)	-	17	-	8
A	7	Main processing unit (MPU)	-	44	-	20
A	8	Partial system UPS (UPS)	-	39	-	18
A	9	Aero DR generator interface unit (GIB)	-	15	-	7
A	10	Longitudinal Rails	-	-	-	-
A	11	Flouro control cabinet (GCU)	-	238	-	108
A	12	Generator control cabinet (XRC)	7507	901	2220	409
A	13	Overhead tube conveyor (OTC)	-	908	-	412
B	14	Power distribution unit (PDU)	-	202	-	92
A	15	Precision 600FP table (TBL)	1239	4168	360	1732
A/D	16	Monitor suspension - one monitor (MS)	-	-	-	-
A	17	Systems cabinet (RCU-SYS)	-	421	-	191
A	18	Table cable stand (TCS)	-	24	-	11
A	19	Table control unit (TCU)	-	130	-	59
A/D	20	Vertical wall stand	-	414	-	188
A/D	21	TIMMS 2000 on cart (TPC)	-	200	-	25
A	22	Super noise reduction filter	-	-	-	-
C	23	Minimum opening for equipment delivery is 47.25 in clear W x 78.75 in H, contingent on a 63 in. corridor width				
C	24	Counter top for equipment- provide grommeted openings as required to route cables				
C	25	Counter top with sink, base, and wall cabinets				
C	26	Control wall, 7 Ft. high with lead glass viewing window				

Exam room height	
RECOMMENDED FINISHED FLOOR TO CEILING HEIGHT	9'-6"

For Accessory Sales: (866) 281-7545 Options 1, 2, 1, 2 or mail to: gehcaccessorysales@ge.com

X-RAY DIAGNOSTIC TABLE

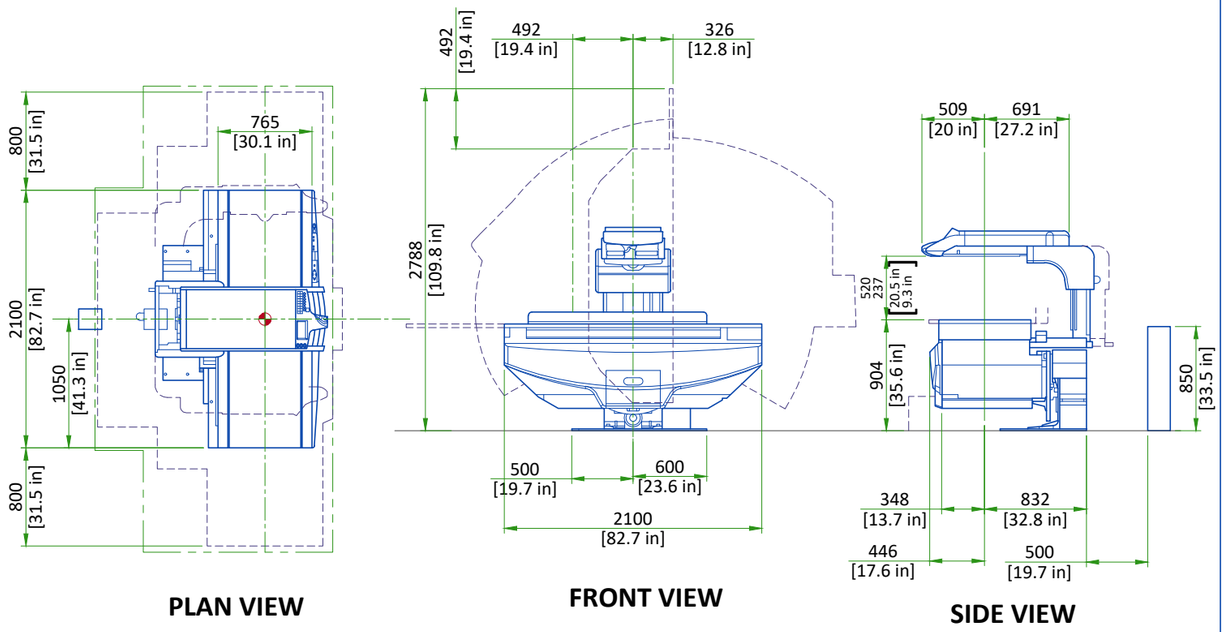

SCALE 1:50

TABLE CONTROL UNIT (TCU)

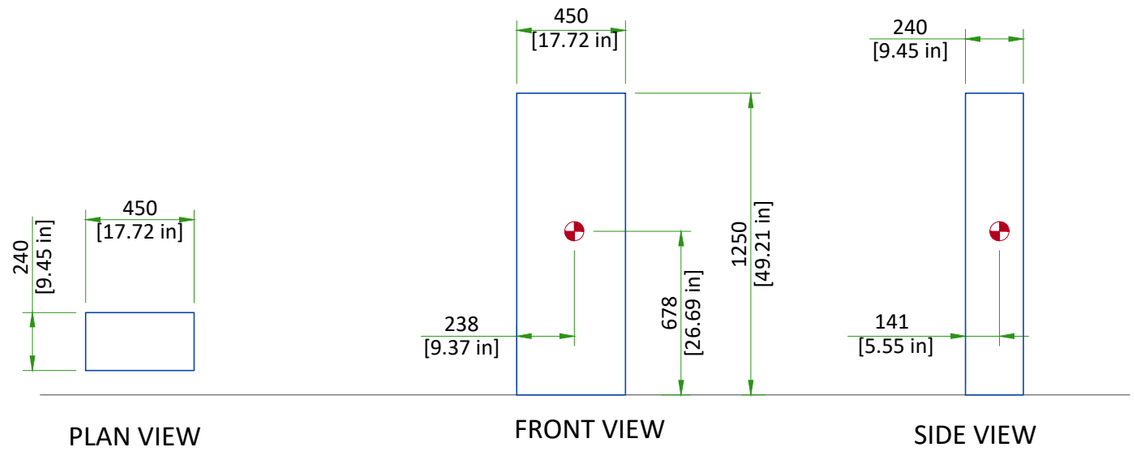

Center of gravity

NOT TO SCALE

VERTICAL BUCKY STAND (VBS)

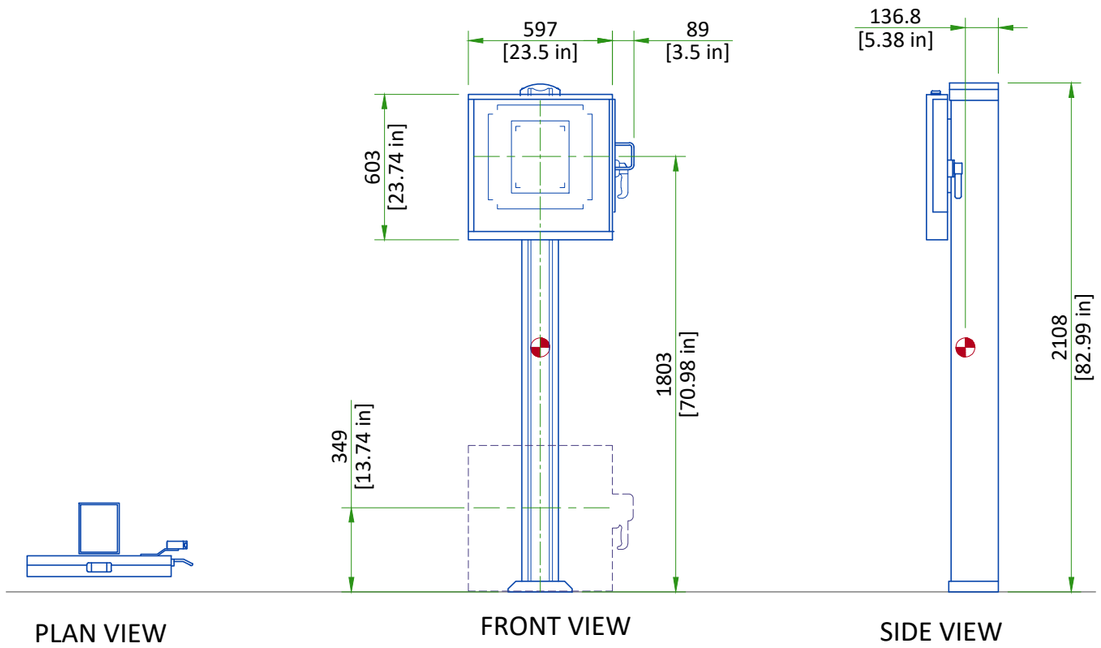

Center of gravity

NOT TO SCALE

SYSTEMS CABINET (SYS)

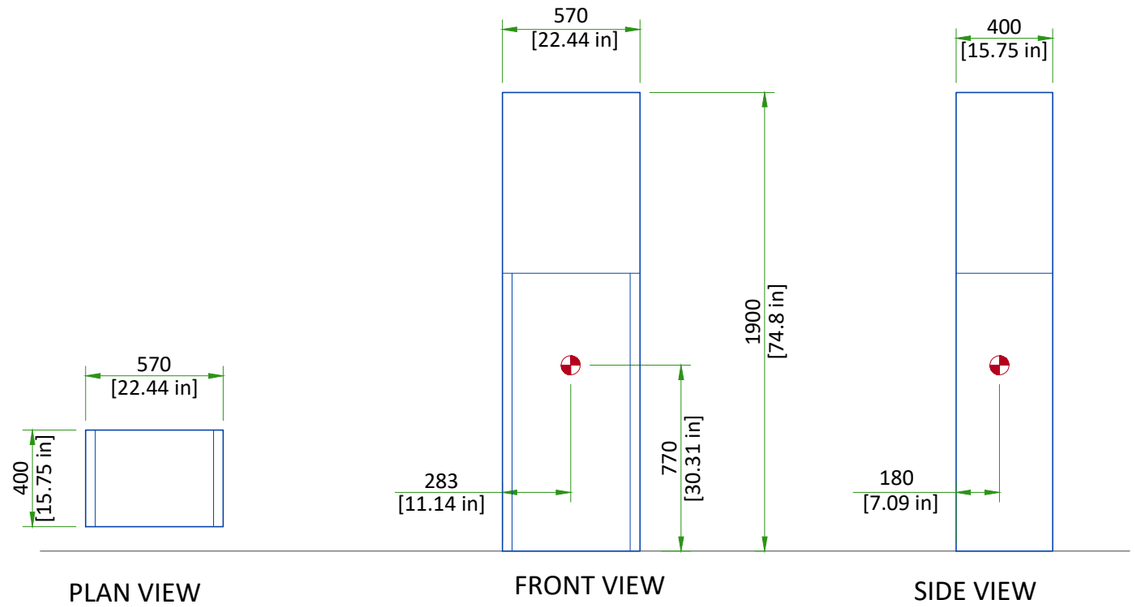

Center of gravity

NOT TO SCALE

GENERATOR CONTROL CABINET (XRC)

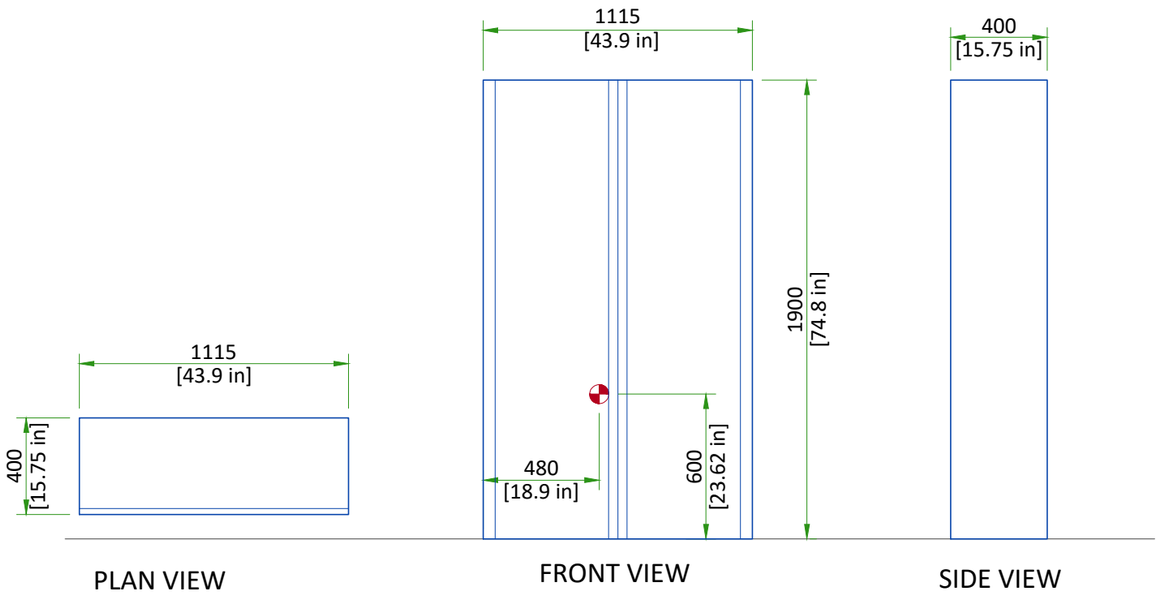

Center of gravity

NOT TO SCALE

FLUORO CONTROL CABINET (GCU)

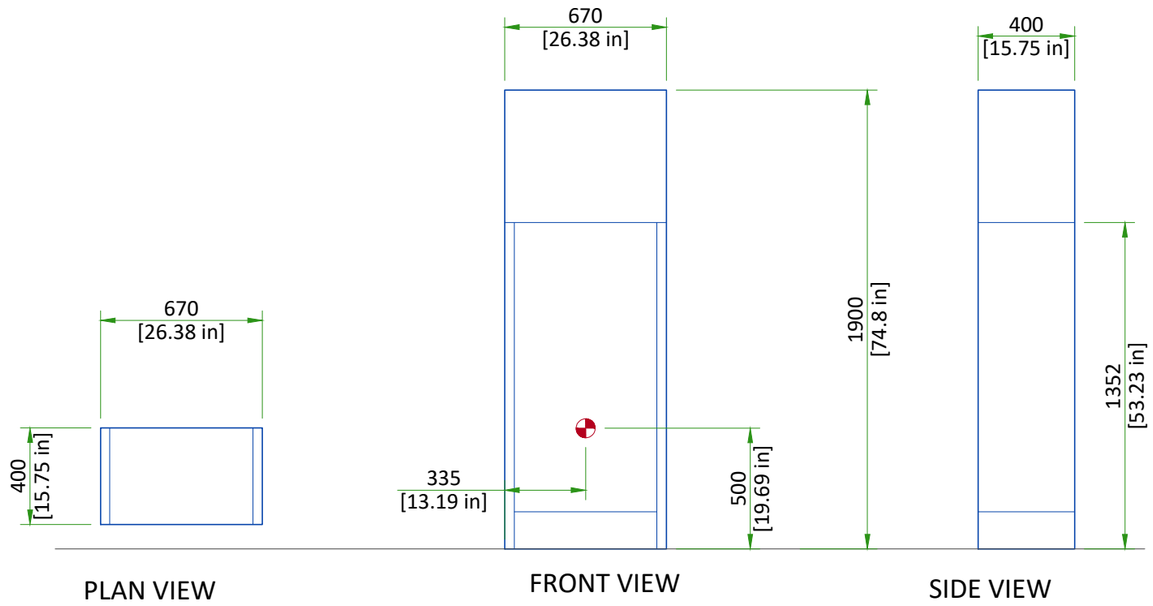

Center of gravity

NOT TO SCALE

POWER DISTRIBUTION UNIT (PDU)

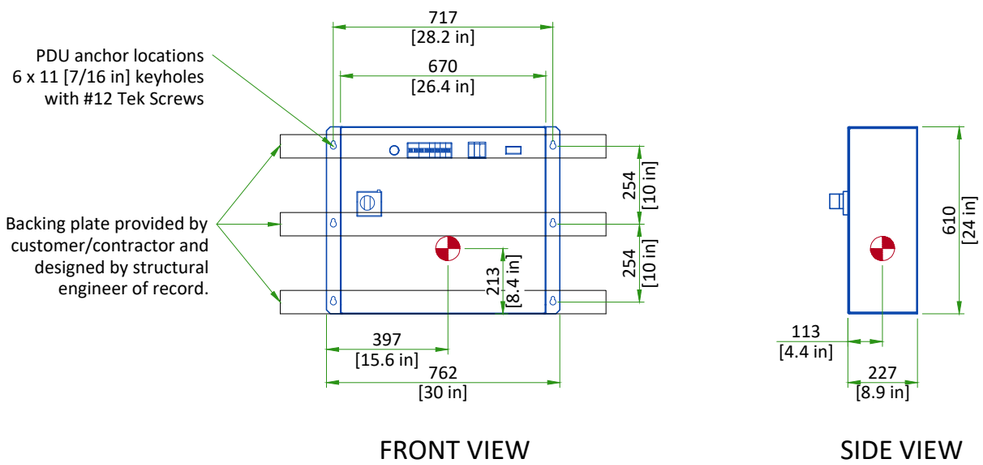

Center of gravity

NOT TO SCALE

DELIVERY

THE CUSTOMER/CONTRACTOR SHOULD:

- Provide an area adjacent to the installation site for delivery and unloading of the GE equipment.
- Ensure that the dimensions of all doors, corridors, ceiling heights are sufficient to accommodate the movement of GE equipment from the delivery area into the definitive installation room.
- Ensure that access routes for equipment will accommodate the weights of the equipment and any transportation, lifting and rigging equipment.
- Ensure that all necessary arrangements for stopping and unloading on public or private property not belonging to the customer have been made.

SHIPPING WEIGHTS AND CONTENTS

PACKAGE	DESCRIPTION	WEIGHT	
		kg	lbs
DIAGNOSTICS TABLE	GANTRY, BODY, IMAGING DEVICE, BEAM LIMITING DEVICE	1650	3637.6
	CONTROL CABINET	60	132.3
	SYSTEM CABINET	190	418.9
	COVERS, CABLES	160	352.7
HIGH-VOLTAGE GENERATOR	X-RAY HIGH-VOLTAGE GENERATOR CABINET	450	992.1
	CONSOLE, CABLES	100	220.5
	PULSED FLUOROSCOPY CONTROL UNIT	185	407.9

Route must satisfy the following requirements:

Width of corridor: 1600mm [63 in] or more
Width of opening: 1200mm [47.2 in] clear or more

DONGLE POSITIONING

DONGLE DEFAULT LOCATION AND ADJUSTING RANGE:

- Dongle shall be positioned at the wall of detector insertion direction.
- B is the best position which is in the middle of the wall.
- The height requirement of dongle is 30cm lower than the ceiling.
- Position "A" to "C" (around ±1m) are acceptable locations for dongle.
- There shall be no obstructions in the path between dongle and detector applications.

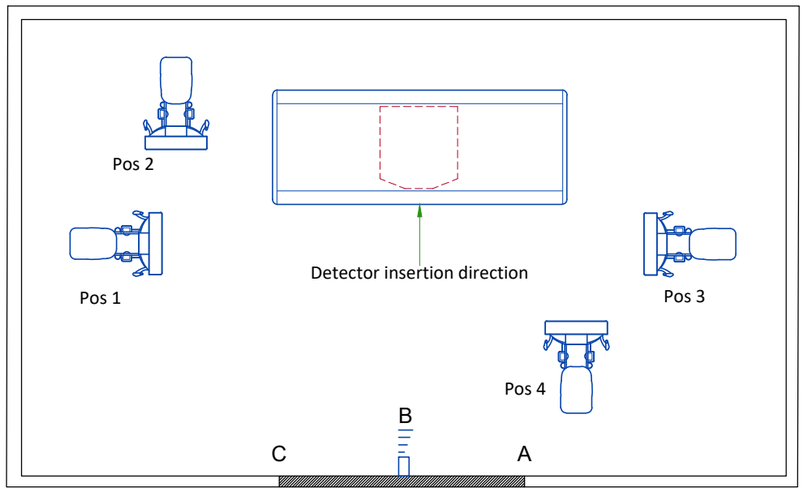

STRUCTURAL NOTES

- Methods of support for the steelwork that will permit attachment to structural steel or through bolts in concrete construction should be favored. Do not use concrete or masonry anchors in direct tension.
- All units that are wall mounted or wall supported are to be provided with supports where necessary. Wall supports are to be supplied and installed by the customer or his contractors. See plan for suggested locations.
- Control walls shall be constructed to minimum 2130mm (7'-0") high.
- Dimensions are to finished surfaces of room.
- Customers contractor must provide all penetrations in post tension floors.
- Customers contractor must provide and install any non-standard anchoring. Documents for standard anchoring methods are included with GE equipment drawings for geographic areas that require such documentation.
- Customers contractor must provide and install hardware for "through the floor" anchoring and/or any bracing under access floors. This contractor must also provide floor drilling that cannot be completed because of an obstruction encountered while drilling by the GE installer such as rebar etc.
- It is the customer's responsibility to perform any floor or wall penetrations that may be required. The customer is also responsible for ensuring that no subsurface utilities (e.g., electrical or any other form of wiring, conduits, piping, duct work or structural supports (i.e. post tension cables or rebar)) will interfere or come in contact with subsurface penetration operations (e.g. drilling and installation of anchors/screws) performed during the installation process. To ensure worker safety, GE installers will perform surface penetration operations only after the customer's validation and completion of the "GE surface penetration permit".
- Different anchor types are used to install the components of the system. Refer to Structural Requirements Section(s) of the Pre-Installation Manual for each anchor requirement.
- Refer to the Structural Requirements Section for the required minimum embedment.
- The ground surface must be flat and leveled, maximum tolerance for leveling is ±1.5 mm per 1 m (0.2 in per 10 feet). A grout pad provided by the contractor is required to meet this specification. The maximum pad thickness is 6.3 mm (0.25 in).

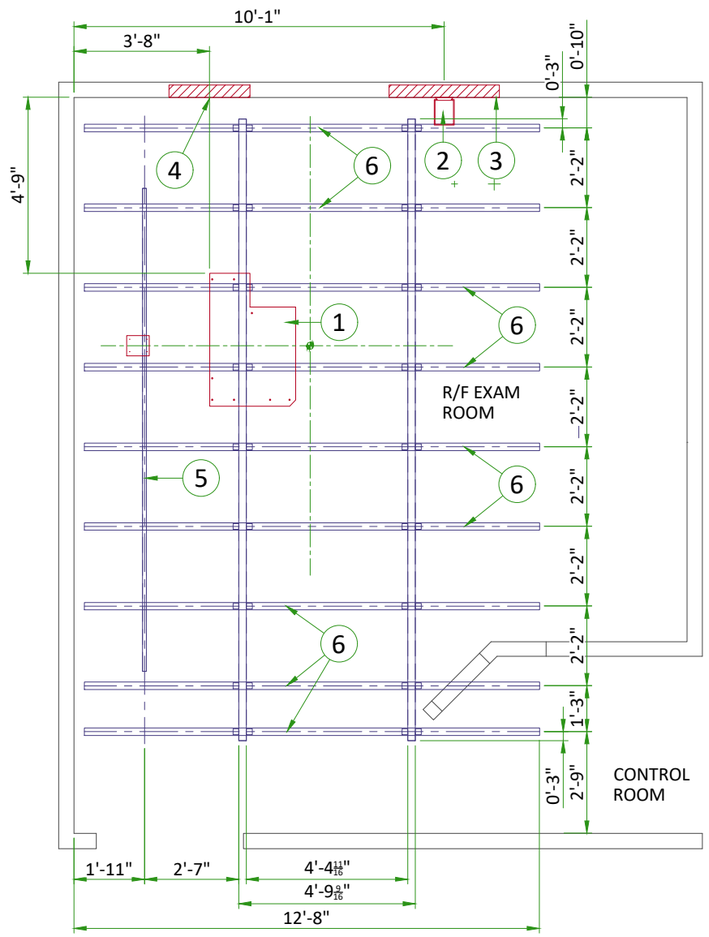

ITEM	DESCRIPTION
	(GE SUPPLIED / CONTRACTOR INSTALLED)
1	Area occupied by GE supplied table baseplate
2	Area occupied by GE supplied wall stand baseplate
3	Support backing for wall stand, locate as shown. Refer to detail on page S3.
	(CONTRACTOR SUPPLIED & INSTALLED)
4	Support backing, locate as shown.
5	Unistrut or equivalent support in ceiling for fastening cable drape rail with nylon trollies. Supports to run continuous with no fittings extending below face of unistrut channel, run wall to wall, be parallel, square, and in the same horizontal plane, flush with the finished ceiling. Rails are mounted to these supports every 2'-2" and require 50 lbs. per bolt load. Methods of support that permit attachment to structural steel or through bolts in the concrete should be favored. Do not use screw anchors in direct tension.
6	Unistrut or equivalent support in ceiling for fastening ceiling supported equipment. Supports to run continuous with no fitting extending below face of unistrut channel, run wall to wall, be parallel, square, and in the same horizontal plane, flush with the finished ceiling. Locate as dimensioned. Methods of support that permit attachment to structural steel or through bolts in concrete should be favored.

TABLE ANCHORING

TABLE STAND

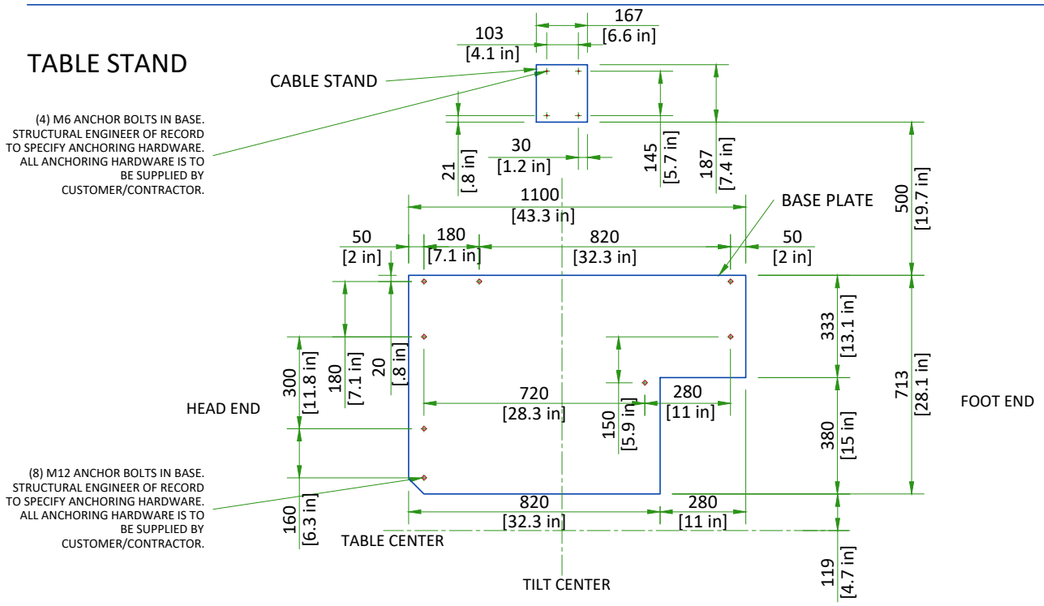

The floor bearing the system is recommended to be concrete and the thickness to be determined by a Structural Engineer to properly support the equipment loads. The supplied anchors require a minimum implanting depth of 77 mm (3.03 in) into the concrete. If sufficient implantation depth of the anchor into the concrete cannot be obtained, work on the floor using M16 bolts to secure the assembly to the floor.

NOT TO SCALE

FLOOR MOUNTING NOTES

All dimensions are mm[in]

The table must not be installed on a wooden floor

The floor must use concrete with a load strength of at least 1760 N/cm² [2560 PSI] over the entire floor surface

The depth of concrete must be at least 130 mm [5.125 in]

The levelness slope in the longitudinal direction should be less than 1mm over 1100mm run [0.0625 over 45 in]

The levelness slope in the lateral direction should be less than 1mm over 713mm run [0.0625 over 28 in]

Evenness of floor under base should be less than 1mm [0.03937 in]

Removal force of the anchor bolts should be at least 12kN

If epoxy leveling of the floor is required for the floor mounted equipment, it will be the responsibility of the contractor to supply and perform this task with assistance of GE. The epoxy base must have a cure rating of 15,000 PSI minimum

WALLSTAND ANCHORING

WALL BACKING

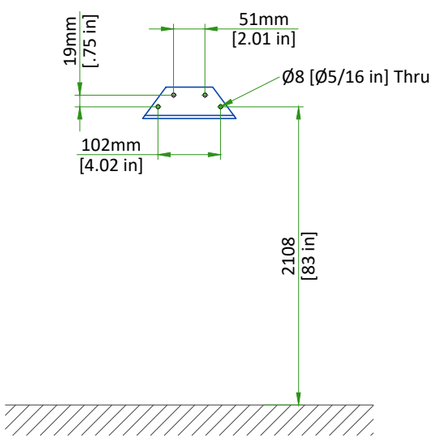

BASEPLATE

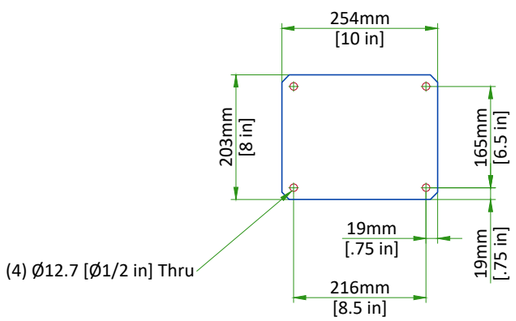

- Customer/contractor to supply and install wallstand backing plate.
- Wallstand backing attached to a minimum of 3 studs for support and stability of the wall stand.

SCALE 1:10

OTS SUSPENSION RAILS MOUNTING SPECIFICATIONS

NOTE:

A. ALL DIMENSIONS ARE MM [IN]

B. LENGTH SHOWN ON DETAIL IS OVERALL SHIPPED LENGTH. ACTUAL LENGTH MAY NEED TO BE MODIFIED PER DIMENSIONS ON PG 2.

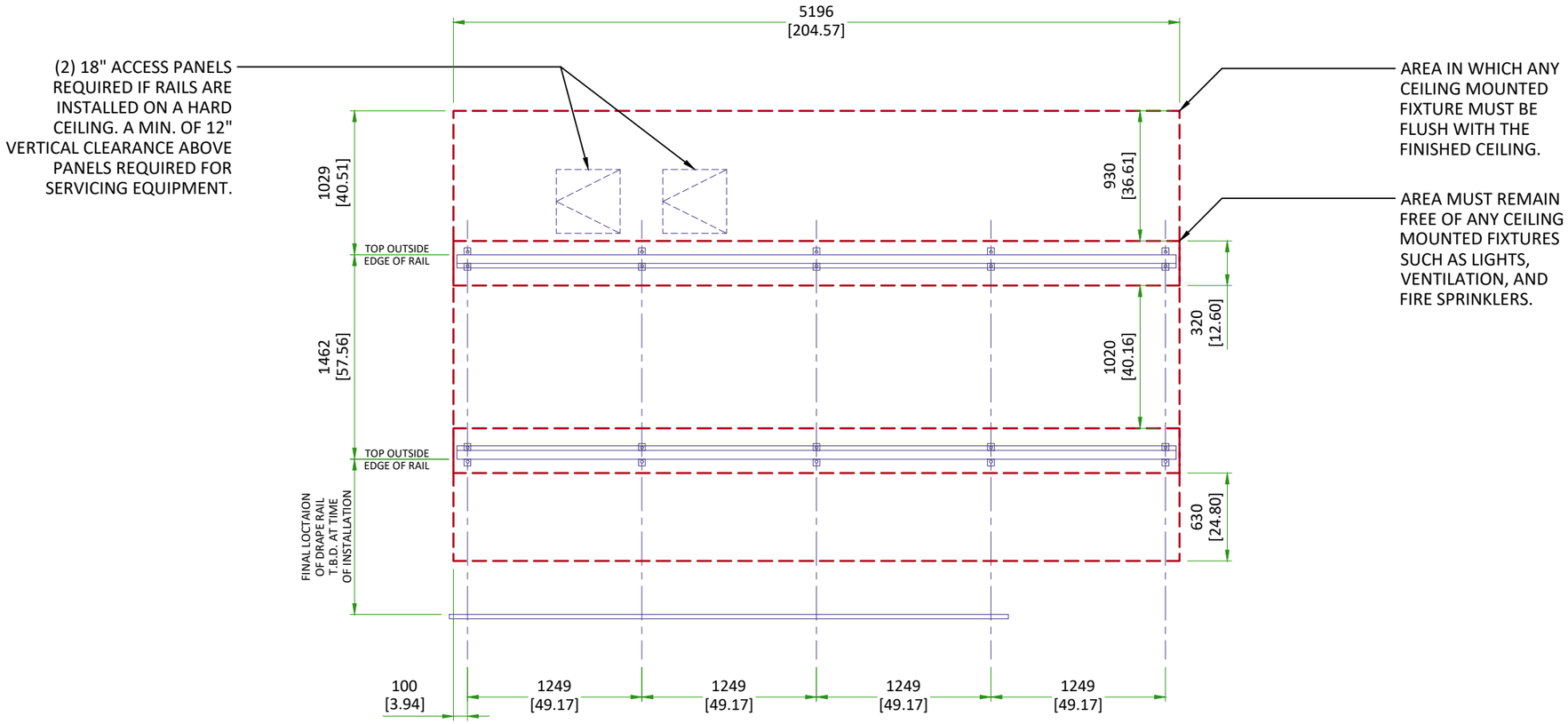

DETAIL 1

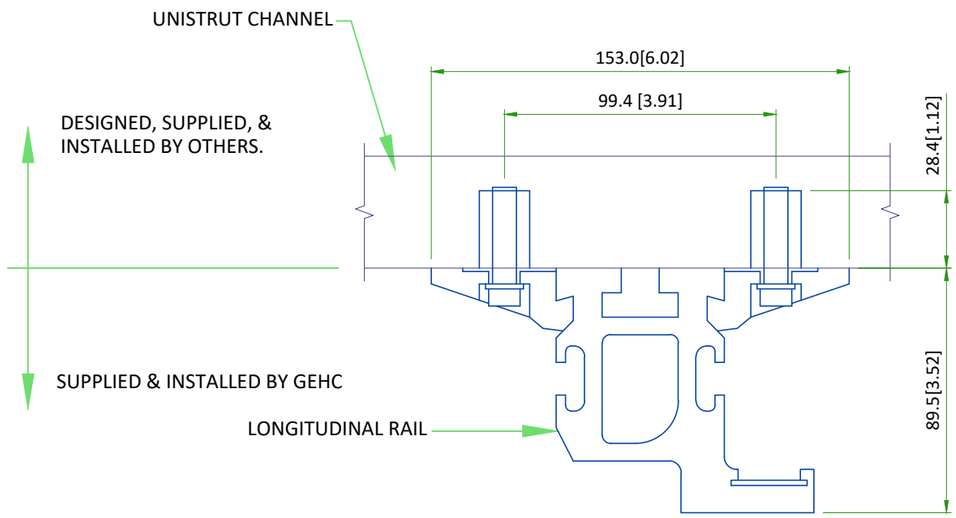

NOT TO SCALE

DETAIL 2

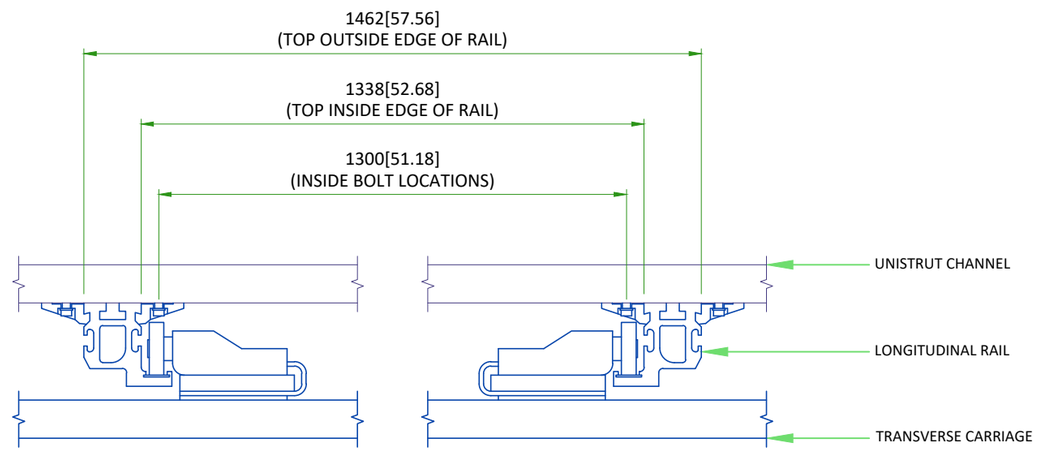

NOT TO SCALE

TEMPERATURE AND HUMIDITY SPECIFICATIONS

OPERATING ENVIORNMENTAL CONDITIONS

Ambient Temperature	10°C to 35°C (50°F to 95°F)
Relative Humidity	30% to 85% (No Condensation)
Atmospheric Pressure	700 hPa to 1060 hPa
Illuminance	1000 lx or less
Atmosphere	Do not install the system in a location where the operating environmental conditions specified above are not satisfied. Also, do not install the system in a location where it may be exposed to the following: • Flammable Gases • Corrosive Gases • Steam • Dripping Water • Excessive Dust • Salty Air • Direct Sunlight • Excessive Shock or Vibration • Excessive Line Voltage Fluctuation

AIR RENEWAL

According to local standards.

NOTE
In case of using air conditioning systems that have a risk of water leakage it is recommended not to install it above electric equipment or to take measures to protect the equipment from dropping water.

HEAT DISSIPATION DETAILS

ROOM	DESCRIPTION	kW	BTU
		IN-USE	IN-USE
Exam Room	Precision 600FP Table	0.36	1239
	Generator Control Cabinet	2.22	7507
	TOTAL	2.582	8746.000

CONNECTIVITY REQUIREMENTS

Broadband Connections are necessary during the installation process and going forward to ensure full support from the Engineering Teams for the customers system. Maximum performance and availability for the customers system is maintained and closely monitored during the lifetime of the system. Proactive and reactive maintenance is available utilising the wide range of digital tools using the connectivity solutions listed below:

- Site-to-Site VPN/GE Solution
- Site-to-Site VPN/Customer Solution
- Connection through Dedicated Service Network
- Internet Access - connectivity for InSite 2.0

The requirements for these connectivity solutions are explained in the broadband solutions catalogue (separate document).

TYPICAL CABLE MANAGEMENT

CONDUIT IN THE FLOOR

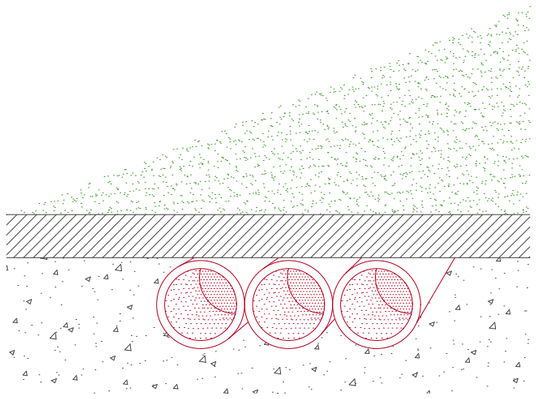

WALL DUCT

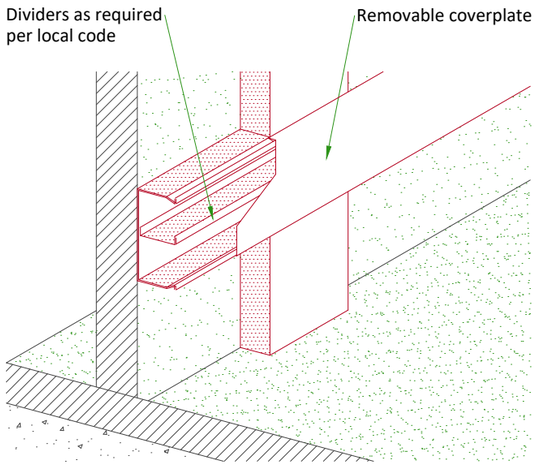

NOT TO SCALE

ELECTRICAL NOTES

1. All wires specified shall be copper stranded, flexible, thermo-plastic, color coded, cut 10 foot long at outlet boxes, duct termination points or stubbed conduit ends. All conductors, power, signal and ground, must be run in a conduit or duct system. Electrical contractor shall ring out and tag all wires at both ends. Wire runs must be continuous copper stranded and free from splices.

1.1. Aluminum or solid wires are not allowed.

2. Wire sizes given are for use of equipment. Larger sizes may be required by local codes.
3. It is recommended that all wires be color coded, as required in accordance with national and local electrical codes.
4. Conduit sizes shall be verified by the architect, electrical engineer or contractor, in accordance with local or national codes.
5. Convenience outlets are not illustrated. Their number and location are to be specified by others. Locate at least one convenience outlet close to the system control, the power distritbution unit and one on each wall of the procedure room. Use hospital approved outlet or equivalent.
6. General room illumination is not illustrated. Caution should be taken to avoid excessive heat from overhead spotlights. Damage can occur to ceiling mounting components and wiring if high wattage bulbs are used. Recommend low wattage bulbs no higher than 75 watts and use dimmer controls (except MR). Do not mount lights directly above areas where ceiling mounted accessories will be parked.
7. Routing of cable ductwork, conduits, etc., must run direct as possible otherwise may result in the need for greater than standard cable lengths (refer to the interconnection diagram for maximum usable lengths point to point).
8. Conduit turns to have large, sweeping bends with minimum radius in accordance with national and local electrical codes.
9. A special grounding system is required in all procedure rooms by some national and local codes. It is recommended in areas where patients might be examined or treated under present, future, or emergency conditions. Consult the governing electrical code and confer with appropriate customer administrative personnel to determine the areas requiring this type of grounding system.
10. The maximum point to point distances illustrated on this drawing must not be exceeded.
11. Physical connection of primary power to GE equipment is to be made by customers electrical contractor with the supervision of a GE representative. The GE representative would be required to identify the physical connection location, and insure proper handling of GE equipment.
12. GEHC conducts power audits to verify quality of power being delivered to the system. The customer's electrical contractor is required to be available to support this activity.

- All junction boxes, conduit, duct, duct dividers, switches, circuit breakers, cable tray, etc., are to be supplied and installed by customers electrical contractor.
- Conduit and duct runs shall have sweep radius bends
- Conduits and duct above ceiling or below finished floor must be installed as near to ceiling or floor as possible to reduce run length.
- Ceiling mounted junction boxes illustrated on this plan must be installed flush with finished ceiling.
- All ductwork must meet the following requirements:

  1.Ductwork shall be metal with dividers and have removable, accessible covers.
  2.Ductwork shall be certified/rated for electrical power purposes.
  3.Ductwork shall be electrically and mechanically bonded together in an approved manner.
  4.PVC as a substitute must be used in accordance with all local and national codes.
- All openings in access flooring are to be cut out and finished off with grommet material by the customers contractor.
- General contractor to insert pull cords for all cable run conduits between the equipment room and the operators control room.
- 10 foot pigtails at all junction points.
- Grounding is critical to equipment function and patient safety. Site must conform to wiring specifications shown on this plan.

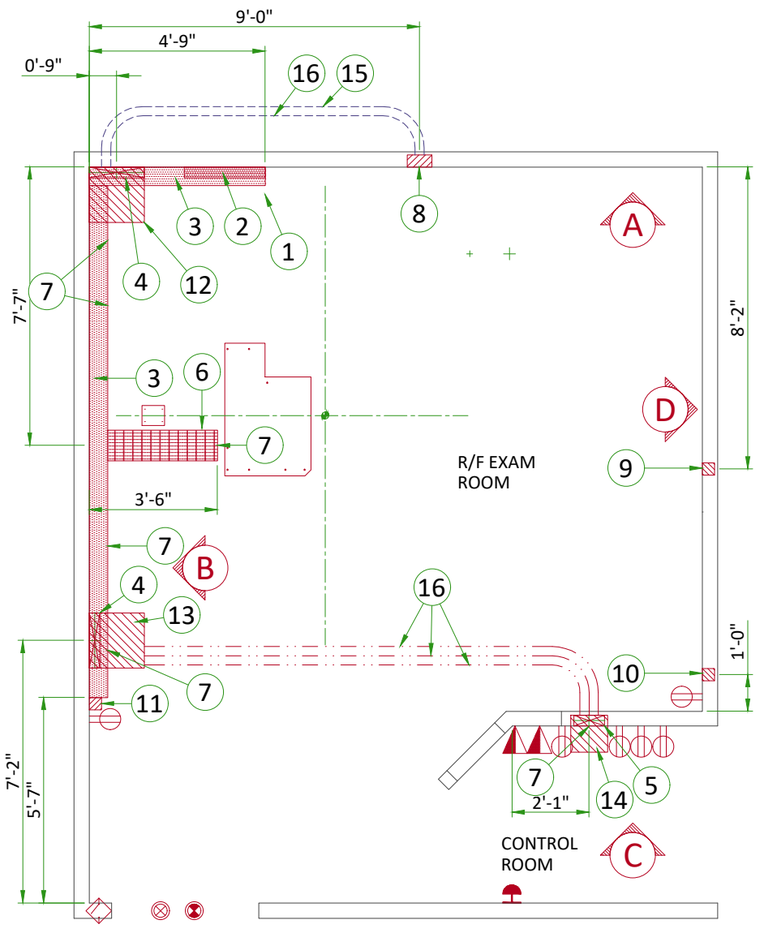

ELECTRCAL LAYOUT ITEM LIST	
1	Power Distribution Unit (PDU)
2	10" x 3 1/2" [250 x 100] Surface horizontal wall duct with minimum 2 dividers (PDU)
3	24" x 6" [600 x 150] Surface wall duct with minimum 2 dividers
4	18" x 3 1/2" [450 x 100] Surface wall duct with minimum 2 dividers
5	10" x 3 1/2" [250 x 100] Flush wall duct with minimum 2 dividers
6	10" x 3 1/2" [250 x 100] Surface floor with minimum 2 dividers
7	Grommeted opening in duct cover (table)
8	Flush J-box - size per local code (Chest unit)
9	Flush J-box - size per local code (Access Point)
10	Flush J-box - size per local code (Battery Charger)
11	Box attached to duct (TIMS Readiness Kit)
12	Box above ceiling size per local code
13	Box below in floor in exam room, size per local code
14	Box below floor in control room, size per local code
15	1 1/2" [38] conduit
16	2 1/2" [64] conduit

ITEM	QTY	Outlet Legend for GE Equipment
		System emergency off (SEO), (recommended height 1.2m [48"] above floor)
		X-Ray room warning light control panel
		X-Ray ON lamp (L1) - 24V
		Door interlock switch (needed only if required by state/local codes)
		Duplex hospital grade, dedicated wall outlet 120-v, single phase power
		Network outlet
		Surface floor duct
		Surface wall duct

Additional Conduit Runs
(Contractor Supplied and Installed)

From (Bubble # / Item)		To (Bubble # / Item)		Qty	Size In.	Size mm
	Warning Light Controller		Warning Light	1	1/2	13
		12	Generator Control Cabinet	1	1/2	13
			120V 1 phase power		As Req'd	As Req'd
1	PDU		Feeder		As Req'd	As Req'd
	Door interlock switch	12	Generator Control Cabinet	1	1/2	13
	Emergency Off			1	1/2	13
		14	Partial UPS		1/2	13
13	Systems Cabinet				1/2	13
14	Aero DR interface unit	9	Aero DR access point		3/4	20
		10	Aero DR battery charger		3/4	20
		13	Aero DR generator interface unit		3/4	20

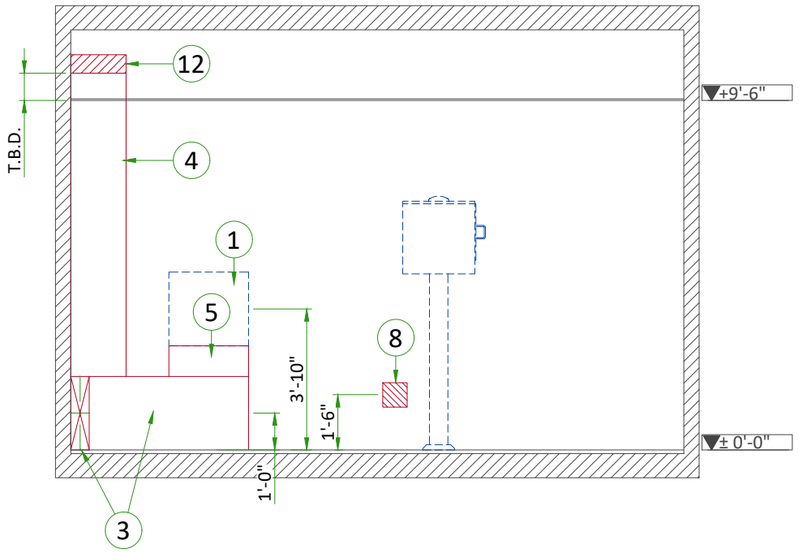
12
T.B.D.
4
1
5
8
3'-10"
1'-6"
1'-0"
3
+9'-6"
± 0'-0"

A

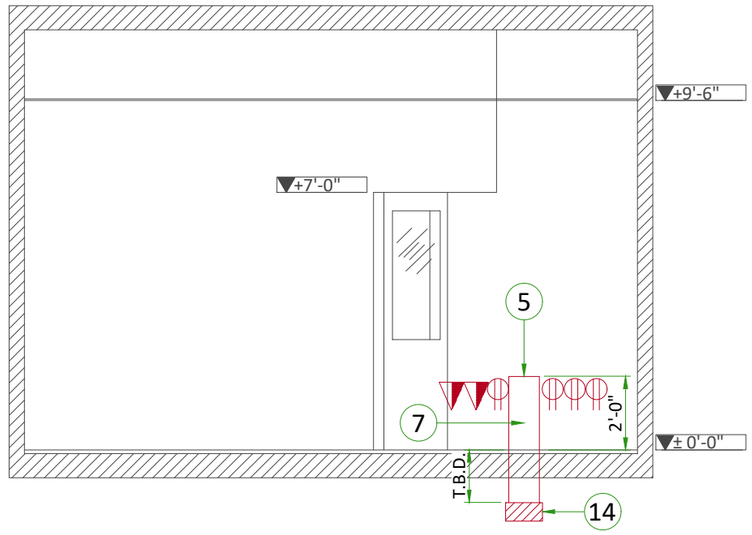
+9'-6"
+7'-0"
5
7
2'-0"
± 0'-0"
T.B.D.
14

C

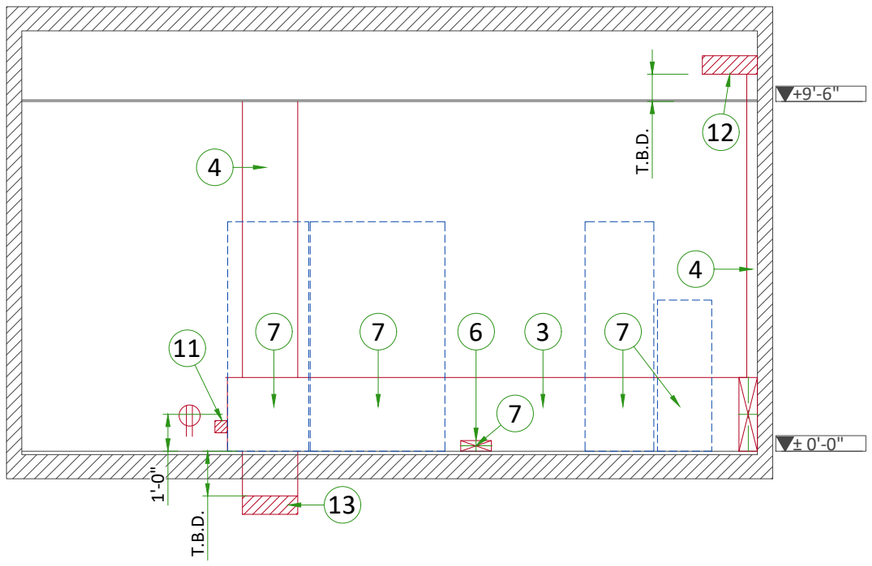
+9'-6"
T.B.D.
12
4
4
11
7
7
6
3
7
7
1'-0"
T.B.D.
13
± 0'-0"

B

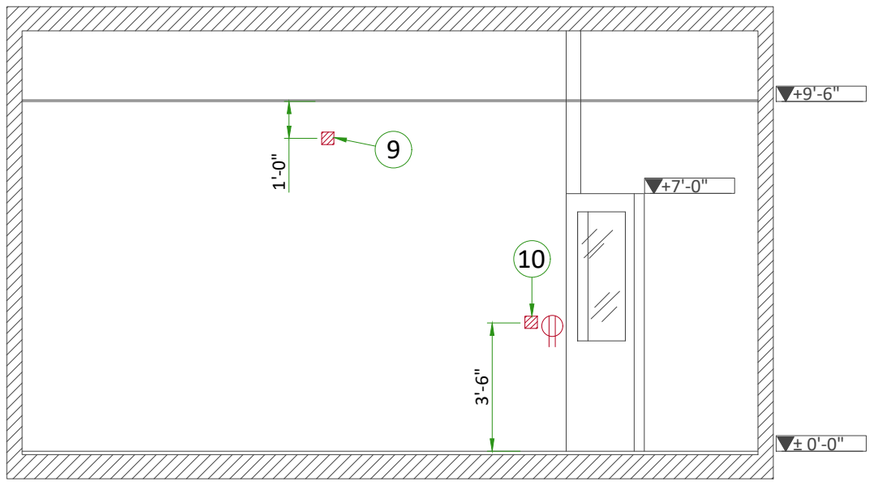
+9'-6"
1'-0"
9
+7'-0"
10
3'-6"
± 0'-0"

D

INTERCONNECTIONS

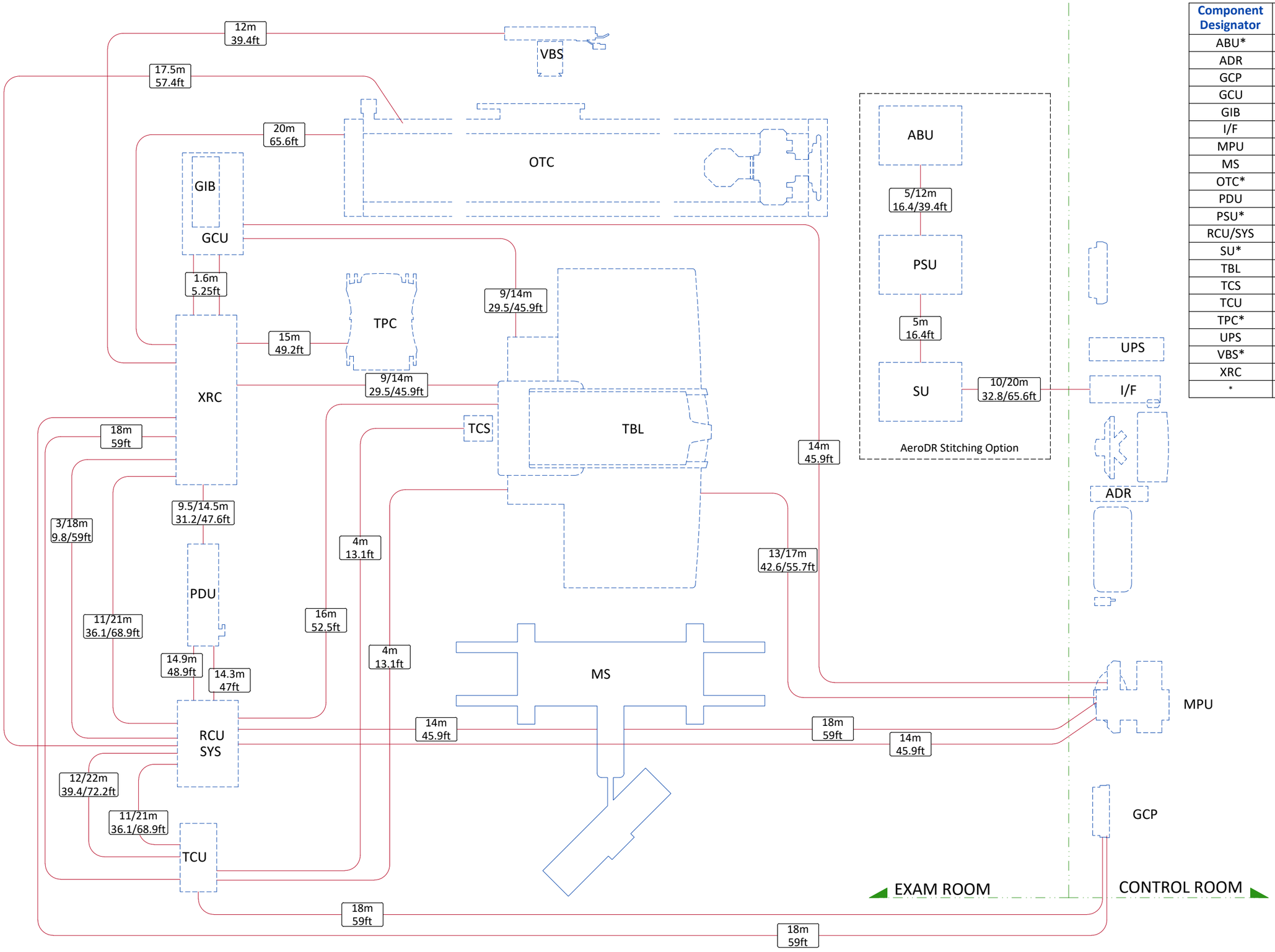

Component Designator	Description
ABU*	Aero DR battery unit
ADR	Aero DR controller
GCP	Generator control panel
GCU	Flouro control cabinet
GIB	Aero DR generator interface unit
I/F	Aero DR interface unit
MPU	Main processing unit
MS	Monitor suspension/cart
OTC*	Overhead tube conveyor
PDU	Power Distribution Unit
PSU*	Aero DR Power Supply Unit
RCU/SYS	Systems Cabinet
SU*	Aero DR Stitching Unit
TBL	Precision 600FP Table
TCS	Table Cable Stand
TCU	Table Control Unit
TPC*	TIMMS 2000
UPS	Partial System UPS
VBS*	Wall stand
XRC	Generator control cabinet
*	Optional equipment

POWER REQUIREMENTS

POWER SUPPLY	200/220/380/400/415/440/480V ± 10%, THREE-PHASE + G	
FREQUENCIES	50/60Hz ± 1Hz	
POWER DEMAND	86kVA	
MAXIMUM LINE RESISTANCE	200/220V	0.054 Ω or less
	380V	0.10 Ω or less
	400V	0.11 Ω or less
	415V	0.12 Ω or less
	440V	0.14 Ω or less
	480V	0.16 Ω or less

- Power supply should come into a power distribution box (PDB) containing the protective units and controls.
- The section of the supply cable should be calculated in accordance with its length and the maximum permissible voltage drops.
- There must be discrimination between supply cable protective material at the beginning of the installation (main low-voltage transformer side) and the protective devices in the PDB.

SUPPLY CHARACTERISTICS

- Power input must be separated from any others which may generate transients (elevators, air conditioning, radiology rooms equipped with high speed film changers...)
- All equipment (lighting, power outlets, etc...) installed with GE system components must be powered separately.

GROUND SYSTEM

- Equipotential : the equipotential link will be by means of an equipotential bar. This equipotential bar should be connected to the protective earth conductors in the ducts of the non GE cableways and to additional equipotential connections linking up all the conducting units in the rooms where GE units are located.

CABLES

- Power and cable installation must comply with the distribution diagram below.
- All cables must be isolated and flexible.
- Cable color codes must comply with standards for electrical installation.

Case PDB furnished by GE : The cables for signals and remote control (Y, SEO, L...) will go to PDB with a pigtail length of 1.5m, and will be connected during installation. Each conductor will be identified and isolated (screw connector).

CABLEWAYS

The general rules for laying cableways should meet the conditions laid down in current standards and regulations, with regard to:

- Protecting cables against water (cableways should be waterproof)
- Protecting cables against abnormal temperatures (proximity to heating pipes or ducts)
- Protecting cables against temperature shocks
- Replacing cables (cableways should be large enough for cables to be replaced) metal cableways should be grounded.

POWER DISTRIBUTION

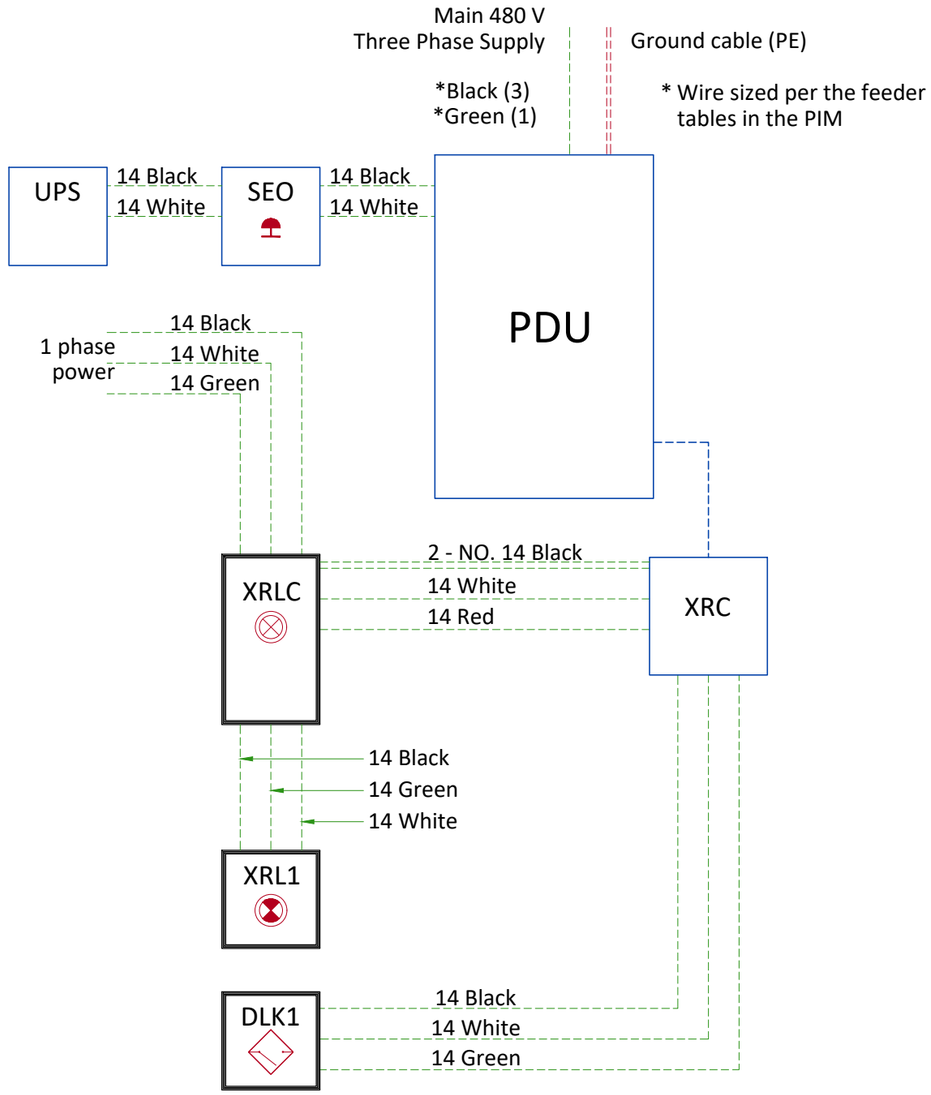

XRC	Generator Control Cabinet
SEO	Emergency OFF button (Control Room), located 1.50m (4.9') above floor
XRLC	Warning Light Control
XRL1	Warning Light
DLK1	Door Interlock Switch (needed only if required by state/local codes)
PDU	Power Distribution Unit
UPS	Uninterruptible Power Supply

- Cable SUPPLIED BY CUSTOMER
- Cable SUPPLIED BY GE
- Equipment SUPPLIED BY CUSTOMER
- Equipment SUPPLIED BY GE