ALL INFORMATION IN THIS DRAWING SET IS PRELIMINARY, SUBJECT TO CHANGE!

REV	DATE	MODIFICATIONS
A	03/Mar/2021	Initial release per PIM revision 2

01 - C1 - Cover Sheet
02 - C2 - Disclaimer - Site Readiness
03 - A1 - General Notes
04 - A2 - Equipment Layout
05 - A3 - Radiation Protection
06 - A4 - Radiation Protection Details
07 - A5 - Equipment Dimensions (1)
08 - A6 - Equipment Dimensions (2)
09 - A6 - Delivery
10 - S1 - Structural Notes
11 - S2 - Structural Layout
12 - S3 - Structural Details (1)
13 - S4 - Structural Details (2)
14 - M1 - HVAC
15 - E1 - Electrical Notes
16 - E2 - Electrical Layout
17 - E3 - Electrical Elevations
18 - E4 - Power Requirements
19 - E5 - Details - Interconnections

A mandatory component of this drawing set is the GE Healthcare Pre Installation manual. Failure to reference the Pre Installation manual will result in incomplete documentation required for site design and preparation.
Pre Installation documents for GE Healthcare products can be accessed on the web at: www.gehealthcare.com/siteplanning

GE does not take responsibility for any damages resulting from changes on drawings made by others. Errors may occur by not referring to the complete set of final issue drawing. GE cannot accept responsibility for any damage due to the partial use of GE final issue drawings, however caused. All dimensions are in millimeters unless otherwise specified. Do not scale from printed pdf files. GE accepts no responsibility or liability for defective work due to scaling from these drawings.

TYPICAL

GE Healthcare

STARGUIDE
FINAL STUDY

Drawn by	Verified by	Concession	S.O. (GON)	PIM Manual	Rev
RET	CPC	-	-	54845893-1EN	2

Format	Scale	File Name	Date	Sheet
A3	1/4"=1'-0"	EN-NUC-TYP-STARGUIDE-WEB.DWG	28/Oct/2021	01/19

DISCLAIMER

GENERAL SPECIFICATIONS

- GE is not responsible for the installation of developers and associated equipment, lighting, cassette trays and protective screens or derivatives not mentioned in the order.
- The final study contains recommendations for the location of GE equipment and associated devices, electrical wiring and room arrangements. When preparing the study, every effort has been made to consider every aspect of the actual equipment expected to be installed.
- The layout of the equipment offered by GE, the dimensions given for the premises, the details provided for the pre-installation work and electrical power supply are given according to the information noted during on-site study and the wishes expressed by the customer.
- The room dimensions used to create the equipment layout may originate from a previous layout and may not be accurate as they may not have been verified on site. GE cannot take any responsibility for errors due to lack of information.
- Dimensions apply to finished surfaces of the room.
- Actual configuration may differ from options presented in some typical views or tables.
- If this set of final drawings has been approved by the customer, any subsequent modification of the site must be subject to further investigation by GE about the feasibility of installing the equipment. Any reservations must be noted.
- The equipment layout indicates the placement and interconnection of the indicated equipment components. There may be local requirements that could impact the placement of these components. It remains the customer's responsibility to ensure that the site and final equipment placement complies with all applicable local requirements.
- All work required to install GE equipment must be carried out in compliance with the building regulations and the safety standards of legal force in the country concerned.
- These drawings are not to be used for actual construction purposes. The company cannot take responsibility for any damage resulting therefrom.

CUSTOMER RESPONSIBILITIES

- It is the responsibility of the customer to prepare the site in accordance with the specifications stated in the final study. A detailed site readiness checklist is provided by GE. It is the responsibility of the customer to ensure all requirements are fulfilled and that the site conforms to all specifications defined in the checklist and final study. The GE Project Manager of Installation (PMI) will work in cooperation with the customer to follow up and ensure that actions in the checklist are complete, and if necessary, will aid in the rescheduling of the delivery and installation date.
- Prior to installation, a structrual engineer of record must ensure that the floor and ceiling is designed in such a way that the loads of the installed system can be securely borne and transferred. The layout of additional structural elements, dimensioning and the selection of appropriate installation methods are the sole responsibility of the structural engineer. Execution of load bearing structures supporting equipment on the ceiling, floor or walls are the customer's responsibility.

RADIO-PROTECTION

- Suitable radiological protection must be determined by a qualified radiological physicist in conformation with local regulations. GE does not take responsibility for the specification or provision of radio-protection.

THE UNDERSIGNED, HEREBY CERTIFIES THAT I HAVE READ AND APPROVED THE PLANS IN THIS DOCUMENT.		
DATE	NAME	SIGNATURE

GLOBAL SITE READINESS CHECKLIST (DI)

DOC1809666 Rev. 7

Site Ready Checks at Installation
EHS Site Requirements
Overall access route to the scan room free from obstruction / high hazards.
Enough space to store tools, equipment, parts, install waste and the general area free from obstruction and trip hazards.
Enough necessary facilities for the GE employees available.
No 3rd parties working in the area that may affect the safety of the installation activity.
Area free from any chemical, gas, dust, welding fume exposure and has painting been completed and dry.
All emergency routes identified, signed and clear from obstruction.
Accessible single source lockable panel that LOTO can be applied to for GE equipment installation (MDP and/or PDU).
There are no other conditions or hazards that you have observed or have been made aware of by the customer or contractors on site.
Required for Mechanical Install start
Room dimensions, including ceiling height, for all Exam, Equipment/Technical & Control rooms meets GE specifications.
Ceiling support structure, if indicated on the GE drawing, is in the correct location and at the correct height according to the Original Equipment Manufacturer specifications.
Levelness and spacing has been measured, and is ready for the installation of any GE supplied components.
Overhead support Structure (unistrut) has been confirmed with customer/contractor to meet required GE provided criteria.
Finished ceiling is installed. If applicable ceiling tiles installed per PMI discretion.
Floor levelness/flatness is measured and within tolerance, and there are no visible defects per GEHC specifications.
Entry door threshold meets PIM requirement
Floor Strength and thickness have been discussed with customer/contractor and they have confirmed GE requirements are met.
Rooms that will contain equipment, including staging areas if applicable, are construction debris free. Precautions must be taken to prevent debris from entering rooms containing equipment.
Cable ways (floor/wall/ceiling/Access Flooring) are available for installation of GE cables are of correct length and diameter.
Cable ways routes per GE Final drawings and cable access openings areas installed at a time determined by GEHC PM. Surface floor duct can be installed at time of system installation.
Adequate room illumination installed and working.
Customer supplied countertops where GE equipment will be installed are in place.
Nuclear Medicine systems levelness measurement survey must be provided to GE prior the delivery.
Required for Calibration start
HVAC systems Installed, and the site meets minimum environmental operational system requirements.
System power & grounding (PDB/MDP) is available as per GE specifications.
System power & grounding (PDB/MDP) is installed at point of final connection and ready to use. Lock Out Tag Out is available.
PMI to confirm all feeder wires and breaker are size appropriately. EPO installed if needed.
PMI to confirm with electrician all power and signal cables are well terminated ensuring there are no loose connections.
Network outlets installed.
Computer network available and working.
Site has license for using/importing radioactive sources and a Hot Lab is available. Radioactive Sources should be available for system calibration during installation.
Lead doors and windows complete or scheduled to be installed. If applicable, radiation protection (shielding) finished & radioprotection regulatory approval for installation obtained.

Note: The details shown here are only an extract from DOC1809666. For the complete document please contact your PMI.

ENVIRONMENT

ALTITUDE

- Operating altitude: from -150 m [-492 ft] to 3000 m [9,843 ft].

MAGNETIC FIELD SPECIFICATIONS

- In order to avoid interference on the system, the static field limits from the surrounding environment must be less than 1 Gauss in both the scan and the operator rooms.
- The ambient static magnetic field in the system location must be less than 1 Gauss.
- The ambient AC magnetic fields must be below 0.01 Gauss peak.
- The system must be installed in an x-ray protected room providing an attenuation of at least 12 db for radio disturbances from 30 MHz to 1 GHz.

MAXIMUM GANTRY AUDIBLE NOISE LEVEL

- The system creates acoustic noise. In compliance with IEC 601-1-1 standard the measured noise (at 1 m [3.3 ft] distance away from the system) is less than 70 db. It is recommended that the wall and ceiling surface is of a sound dampening material to avoid noise reverberation and amplification.
- Take into account that the system includes an intercom communication system connecting the Operator room and the Scan room, to enable the operator to give the patient instructions during the examination.

VIBRATION SPECIFICATIONS

- The system components are sensitive to vibration in the frequency range of 0.5 to 20 Hz, depending on the amplitude of the vibration. It is the customer’s responsibility to contract a vibration consultant or qualified engineer to verify that these specifications are met and implement an appropriate solution.
- To minimize vibrations, the system must be installed on a solid floor, as far as possible from vibration sources (parking lots, roadways, subways, heliports, trains, hallways, elevators, hospital power plants... etc).

CUSTOMER SITE READINESS REQUIREMENTS

- Any deviation from these drawings must be communicated in writing to and reviewed by your local GE healthcare installation project manager prior to making changes.
- Make arrangements for any rigging, special handling, or facility modifications that must be made to deliver the equipment to the installation site. If desired, your local GE healthcare installation project manager can supply a reference list of rigging contractors.
- New construction requires the following;
  1. Secure area for equipment,
  2. Power for drills and other test equipment,
  3. Capability for image analysis,
  4. Restrooms.
- Provide for refuse removal and disposal (e.g. crates, cartons, packing)
- For CT, MR, PET/CT, and SPECT systems it is required to minimize vibrations within the scan room. It is the customer's responsibility to contract a vibration consultant/engineer to implement site design modifications to meet the GE vibration specification. Refer to the system preinstallation manual for vibration specifications.

RADIOACTIVE ISOTOPES

USING RADIOACTIVE ISOTOPES

Since the system involves the use of radioactive isotopes, compliance with Nuclear Regulatory Commission regulations, or similar regulatory requirements (depending on the country), must be adhered to and all permissions obtained well in advance. It is recommended that regulatory compliance is arranged early in the site planning process.

It is essential that all preparations are completed so that required source materials can be obtained prior to installation, including calibration sources. Take into consideration that these sources may have fairly long delivery lead times, yet may also have a short half life, so that it may not be advisable to store them over long periods of time.

RADIOACTIVE ISOTOPES FOR SYSTEM CALIBRATION

DESCRIPTION	
Basic calibration	Site has license for Tc^{99m}
	Tc^{99m} will be available during installation
Isotopes to be used at site are available for installation. Note: Specify age and strength	Co^{57} (Line Source)

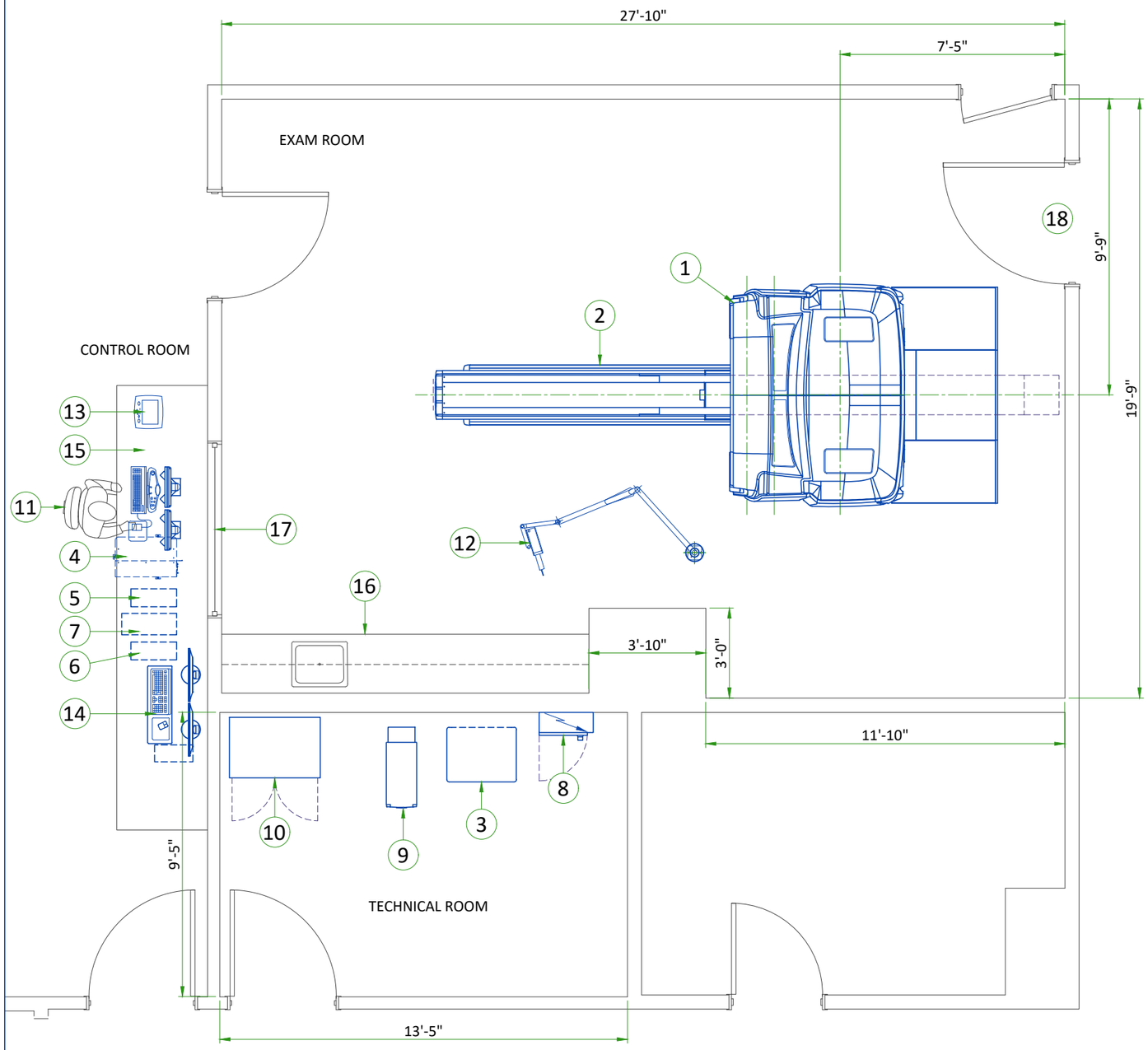

LEGEND			
A	GE Supplied	D	Available from GE
B	GE Supplied/contractor installed	E	Equipment existing in room
C	Customer/contractor supplied and installed	*	Item to be reinstalled from another site

BY	ITEM	DESCRIPTION	MAX HEAT OUTPUT (btu)	WEIGHT (lbs)	MAX HEAT OUTPUT (W)	WEIGHT (kg)
A	1	Starguide Gantry	20703	7032	5700	3240
A	2	Patient Table	682	1228	200	557
A	3	Power Distribution Unit	5118	815	1500	370
A	4	Operators Console	8189	143	2400	65
A	5	NM Acquisition Station	256	25	75	11
A	6	SmartConsole	257	25	75	11
A	7	Image Generator Console	510	49	150	22
B	8	Main Disconnect Panel	-	115	-	52
A/D	9	Partial UPS (14 kVA)	5122	619	1501	281
A/D	10	Service Cabinet (including tools)	-	287	-	130
A/D	11	Operators Chair	-	-	-	-
A/D	12	Injector - ceiling mounted	-	79	-	36
A/D	13	Injector Control and Electronics	320	22	94	10
A/D	14	Xeleris workstation	256	25	75	11
C	15	Counter top for equipment				
C	16	Counter top with sink, base and wall cabinets				
C	17	Lead glass window				
C	18	Minimum door opening for equipment delivery is 48 in. w x 80 in. h [1219mm x 2032mm], contingent on a 96 in. [2438mm] corridor width				

Exam Room Height	
Finished Ceiling Height	9'-0"

For Accessory Sales: (866) 281-7545 Options 1, 2, 1, 2 or mail to: gehcaccessorysales@ge.com

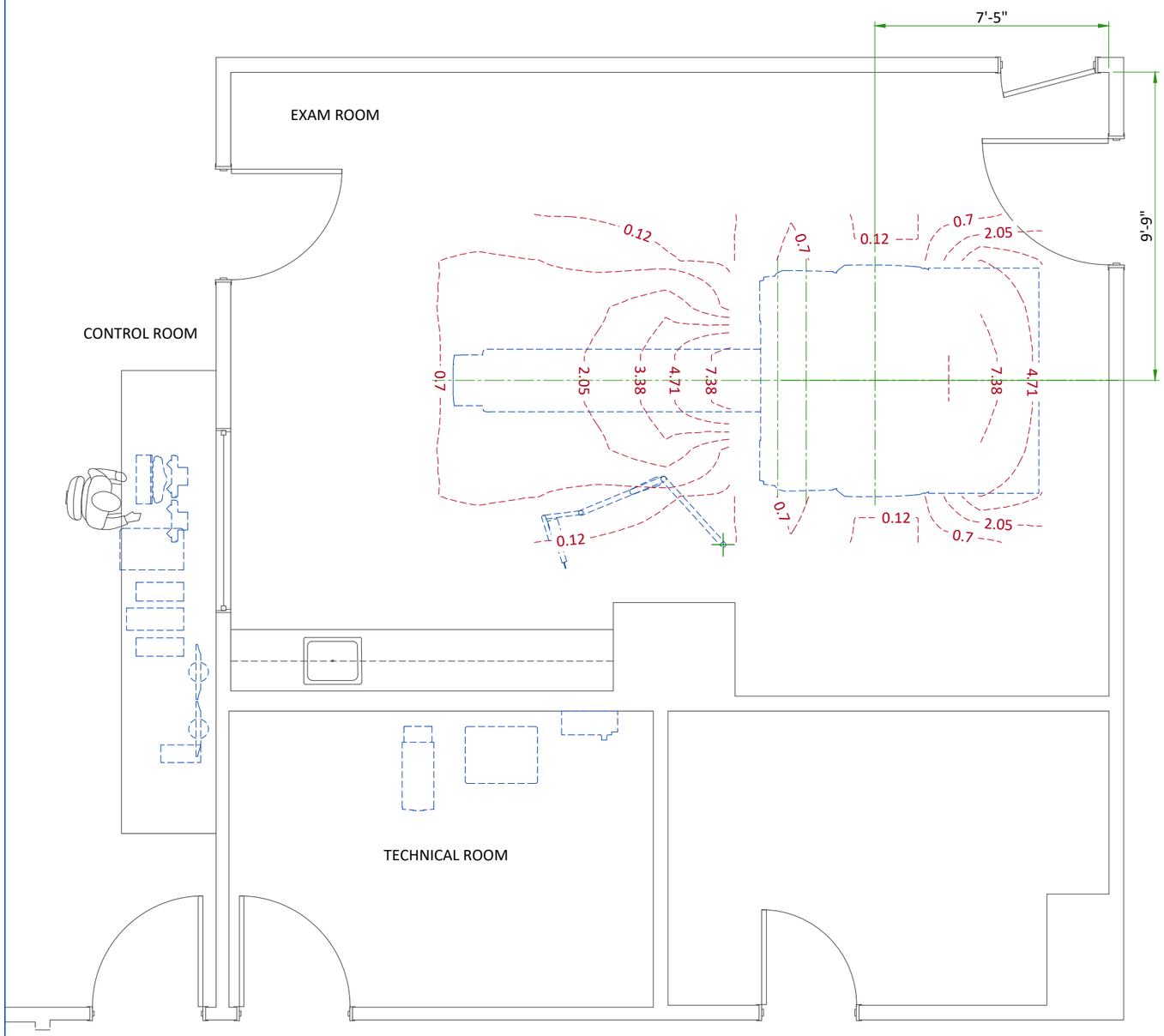

RADIATION PROTECTION LAYOUT

SHIELDING REQUIREMENTS SCALING	
CHANGED PARAMETER (mAs)	MULTIPLICATION FACTOR (new mAs/100)
80 kV	0.21
120 kV	0.71
140 kV	1.00
16x0.625 LD/8x1.25 LD/4x2.5 LD/Fluoro 5 mm	0.59
4x1.25 LD/5 mm (1i)/Fluoro 2.5 mm	0.40
1x1.25 mm images/2x0.625 LD/1x1.25	0.20/0.10
4x3.75 mm images	0.82

SHIELDING REQUIREMENTS:

Radiation shielding regulations differ from one country or state to another. It is the customer's responsibility to ensure that radiation protection and shielding comply with such regulations and requirements during site preparation and system installation and operation.
The system produces x-ray radiation and involves the use and storage of radionuclides. Appropriate barriers such as walls, lead-shielded glass, lead shields, etc. can be installed to protect staff from unnecessary exposure to radiation.
Patients become significant sources of radioactivity; therefore consideration should be given to maximize the distance between the patient and operator during the uptake and acquisition phases of scan procedures.
Scatter-room shielding requirements must be reviewed by a qualified radiological health physicist taking into consideration:

- Scatter radiation levels within the scan room
- Equipment placement
- Weekly projected workloads (#patient/day technique (kvp*ma))
- Materials used for construction of walls, floors, ceiling, doors, and windows
- Access to areas surrounding the Scan Room
- Equipment in areas surrounding the Scan Room (for example: film developer, film storage)

BACKGROUND RADIATION

When the system is calibrated, background radiation from surrounding areas may adversely affect calibration. Therefore all radiation sources must be suitably shielded, including:

- Waiting/Injection areas
- Radionuclide storage and preparation area (sometimes known as "hot lab")

As a general guideline, if the anticipated background radiation in the Scan Room will be higher than 0.1mR/h (1microGy/h), then appropriate additional shielding should be installed.

Shielding of the Scan Room includes walls, lead-shielded glass, lead shields, etc. and must be sufficient to protect staff from unnecessary exposure to radiation. The shielding requirements must be determined by a qualified radiological health physicist, taking into consideration:

- Local regulatory requirements
- Facility policy
- CT scatter radiation levels within the scanning room
- Patient location and level of radiation from patients after intake of radionuclides
- Equipment placement
- Materials used for construction of walls, floors, ceiling, doors, and windows
- Weekly projected work-loads (# patient/day technique (kvp*ma))
- Access to areas surrounding the Scan Room
- Equipment in areas surrounding the Scan Room (for example: film developer, film storage)
- Protection of operator room, included leaded window, walls and door

The mAs, kV and aperture scaling factors shown in the table can be used to adjust exposure levels to the scan technique used at the site.

NOTE: Actual measurements can vary. All measurements have an accuracy of ±20% because of measurement equipment, technique, and system-to-system variation.
The units of measure used for radiation levels have been changed in this document, from mR (millirads) to µGy (micrograys). The conversion factor is : 1 mR = 10 µGy

The illustrations on this page were created using the following technique:

- Body Phantom, 140kV, 100mA, 1 sec, 4x5 mm

RADIATION SCATTER - BODY PHANTOM

NOTE: 140 kV
100 mAs/scan
1 sec
4 x 5mm

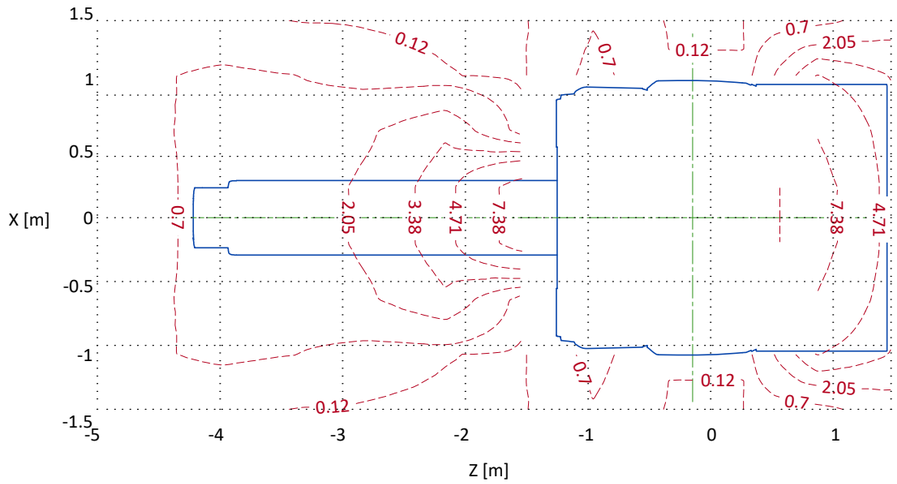

Plan View

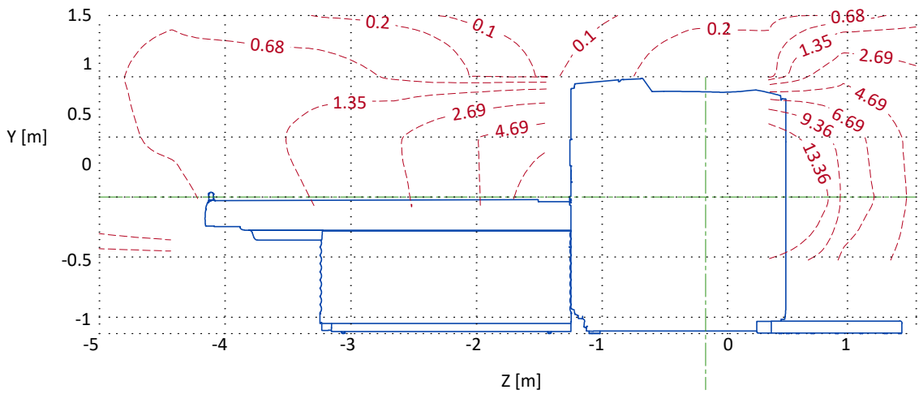

Elevation

DETAIL NOT TO SCALE

RADIATION SCATTER - HEAD PHANTOM

NOTE: 140 kV
100 mAs/scan
1 sec
4 x 5mm

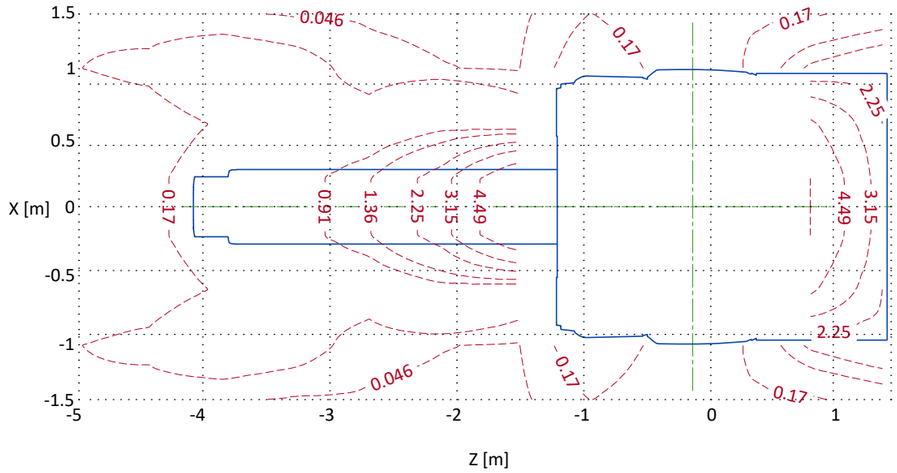

Plan View

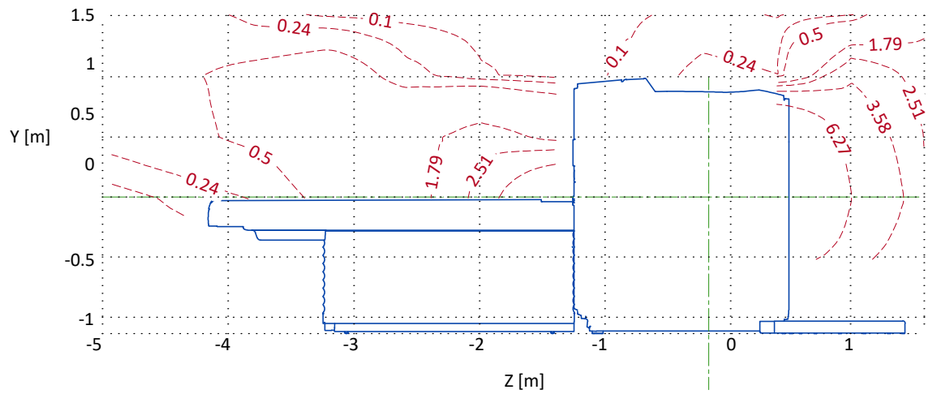

Elevation

DETAIL NOT TO SCALE

GANTRY WITH PATIENT TABLE

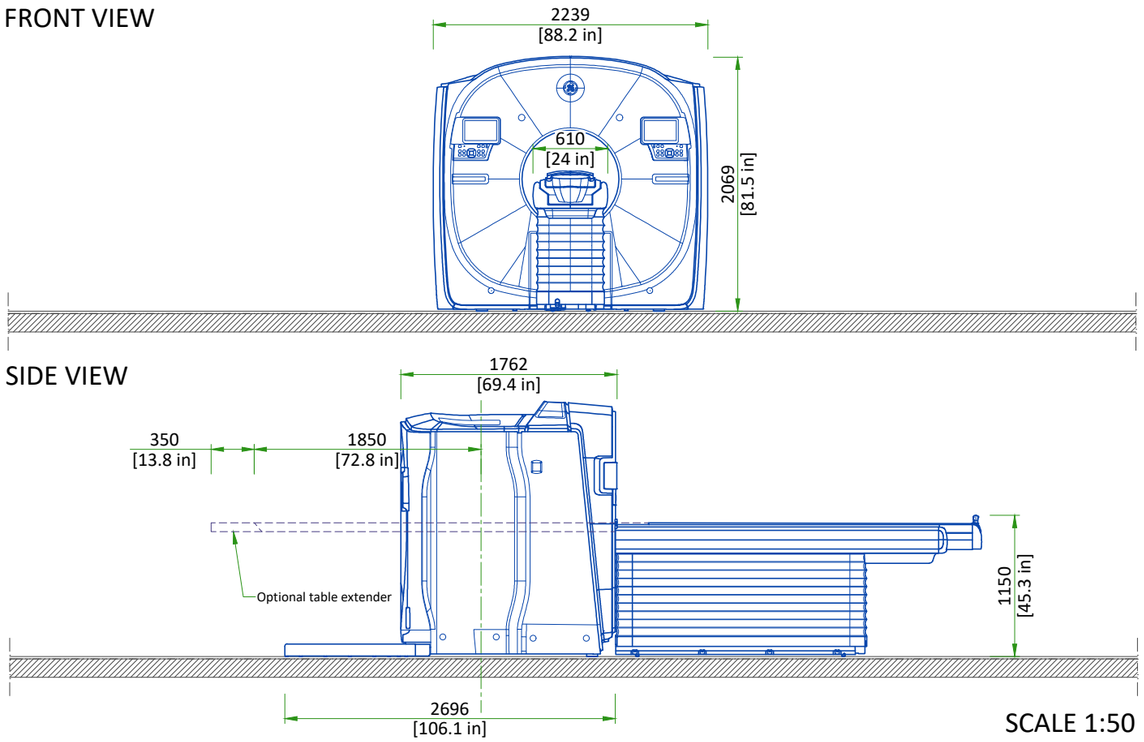

SCALE 1:50

POWER DISTRIBUTION UNIT (PDU)

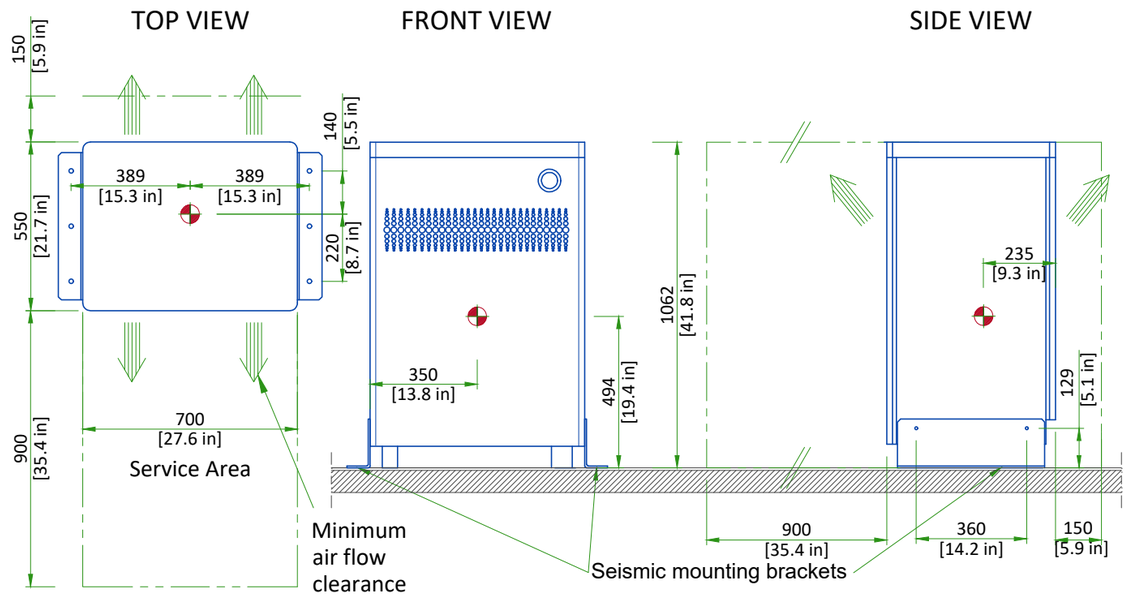

Indicates air flow (Convection)

Center of gravity

SCALE 1:20

CUSTOMER SUPPLIED TABLE AND CONSOLES

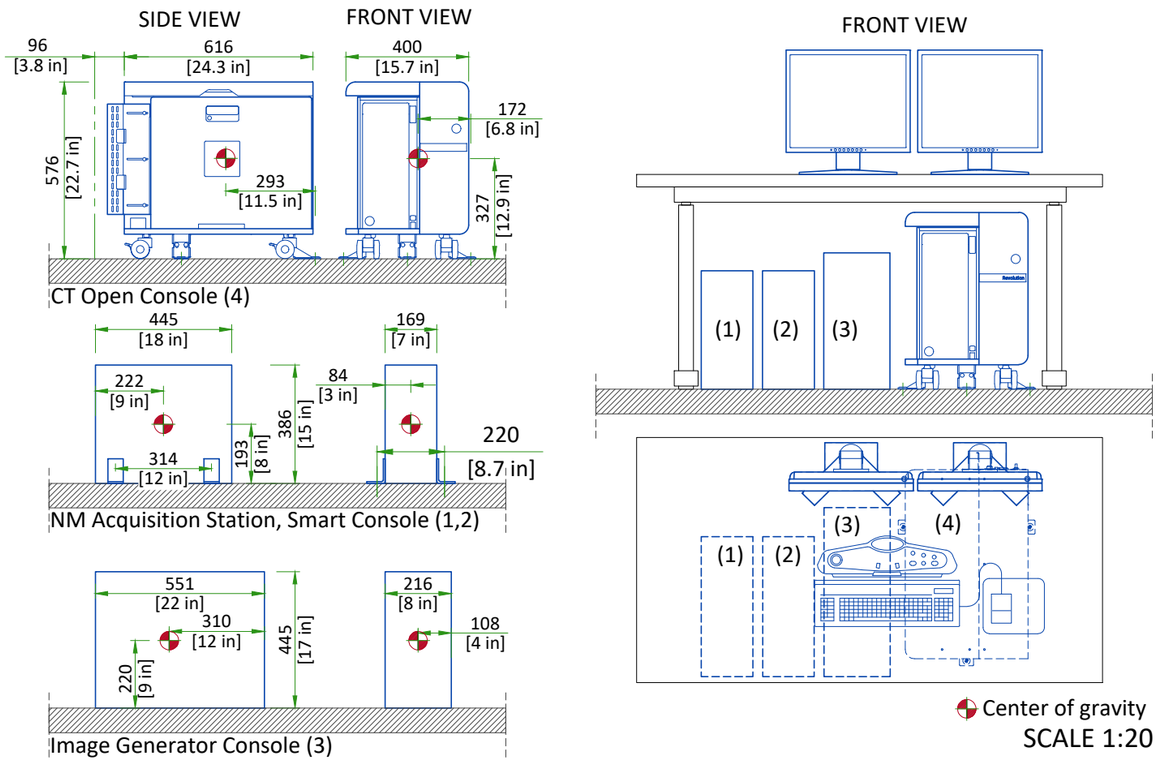

Center of gravity

SCALE 1:20

MAIN DISCONNECT PANEL

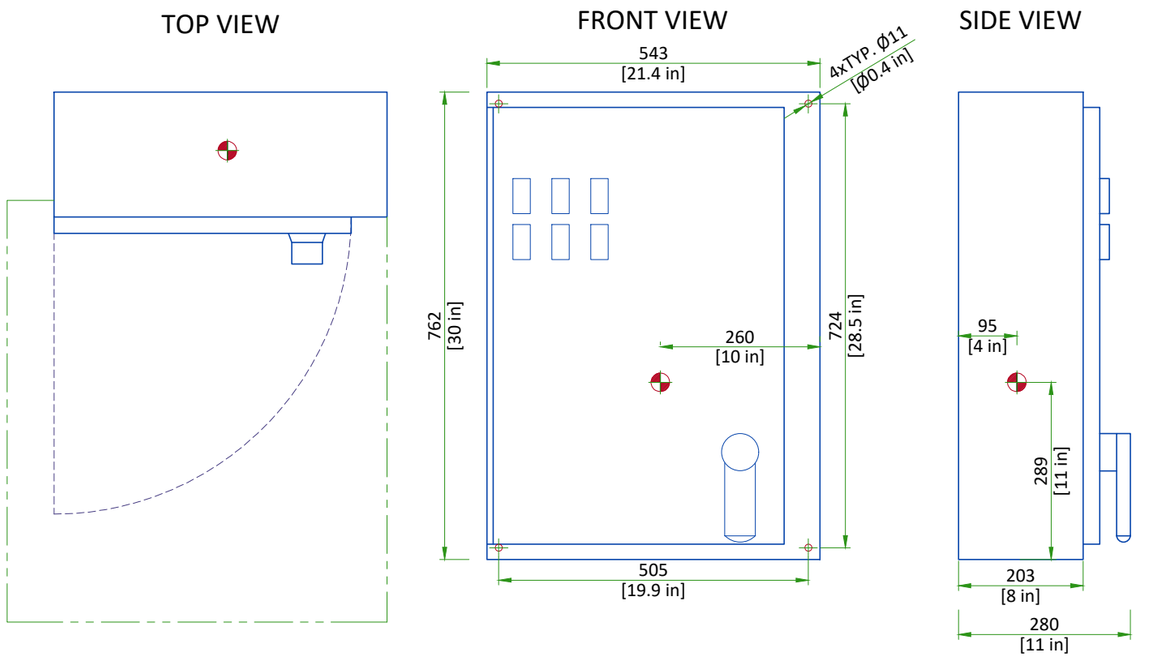

Center of gravity

SCALE 1:10

UNINTERRUPTIBLE POWER SUPPLY

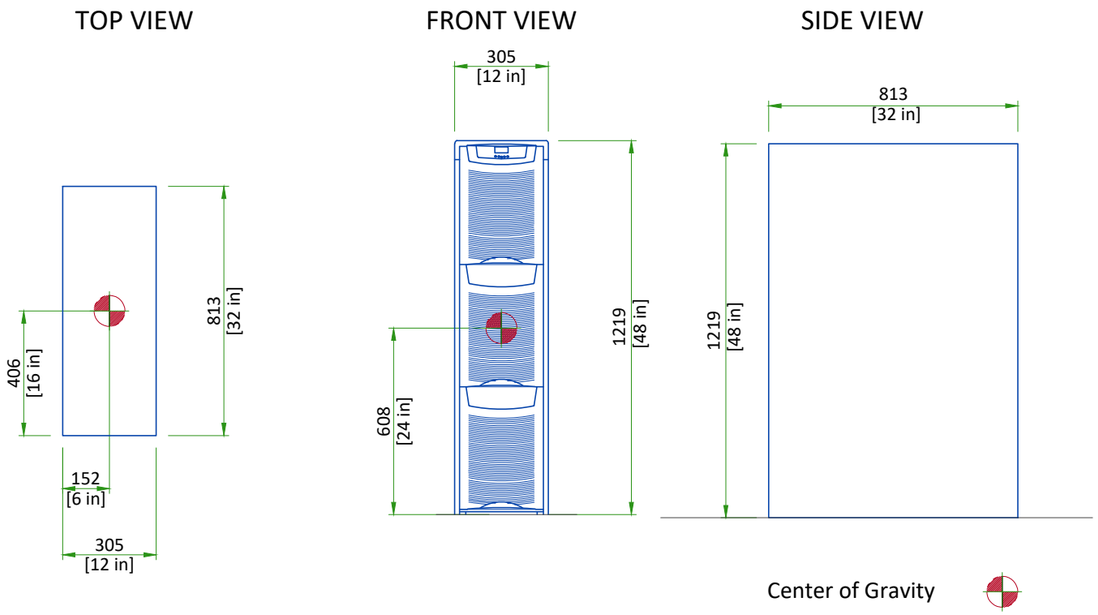

SCALE 1:20

DELIVERY DETAILS

THE CUSTOMER/CONTRACTOR SHOULD:

- Provide an area adjacent to the installation site for delivery and unloading of the GE equipment.
- Ensure that the dimensions of all doors, corridors, ceiling heights are sufficient to accommodate the movement of GE equipment from the delivery area into the definitive installation room.
- Ensure that access routes for equipment will accommodate the weights of the equipment and any transportation, lifting and rigging equipment.
- Ensure that all necessary arrangements for stopping and unloading on public or private property not belonging to the customer have been made.

CT GANTRY:

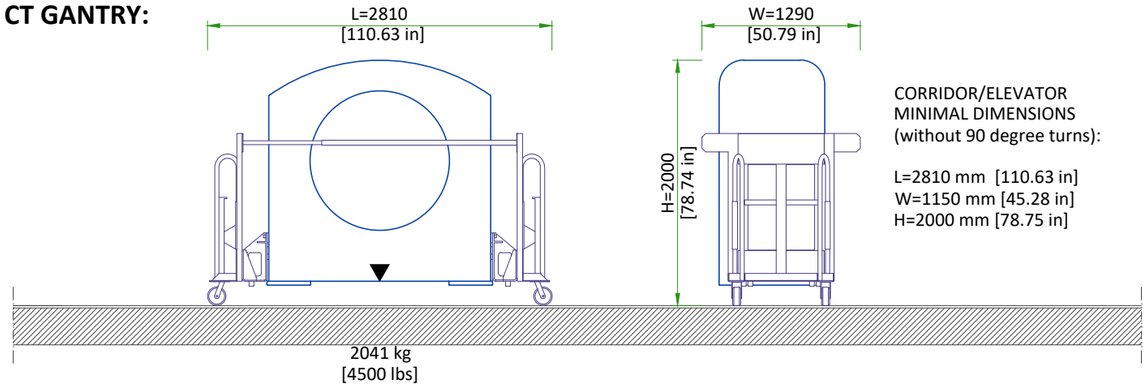

PATIENT TABLE:

CORRIDOR/ELEVATOR MINIMAL DIMENSIONS (without 90 degree turns):

L=2809 mm [110.6 in] W=1000 mm [39.4 in] H=1400 mm [55.1 in] Weight: 557 kg [1228 lb]

NM GANTRY:

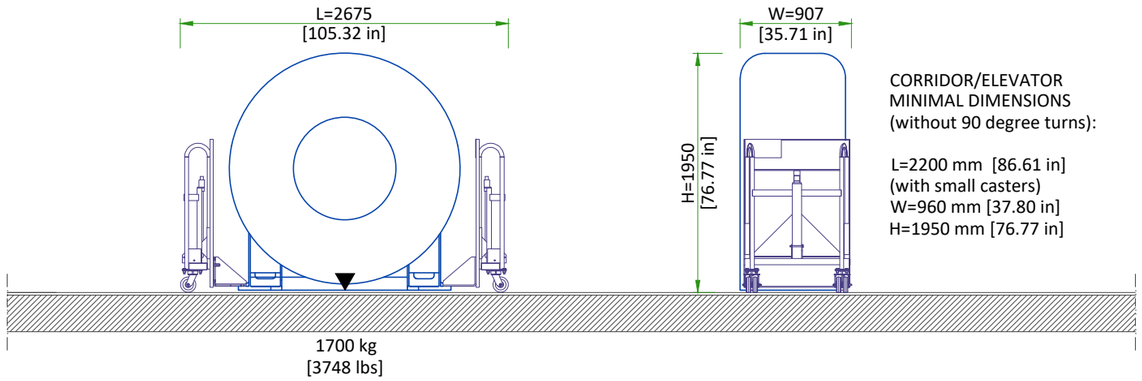

NOT TO SCALE

STRUCTURAL NOTES

- All units that are wall mounted or wall supported are to be provided with supports where necessary. Wall supports are to be supplied and installed by the customer or his contractors. See plan and detail sheets for suggested locations and mounting hole locations.
- Floor slabs on which equipment is to be installed must be flat and level to specifications.
- Dimensions are to finished surfaces of room.
- For seismic regions ensure supports span three members.
- Customers contractor must provide all penetrations in post tension floors.
- Customers contractor must provide and install any non-standard anchoring. Documents for standard anchoring methods are included with GE equipment drawings for geographic areas that require such documentation.
- Customers contractor must provide and install hardware for "through the floor" anchoring and/or any bracing under access floors. This contractor must also provide floor drilling that cannot be completed because of an obstruction encountered while drilling by the GE installer such as rebar etc.
- It is the customer's responsibility to perform any floor or wall penetrations that may be required. The customer is also responsible for ensuring that no subsurface utilities (e.g., electrical or any other form of wiring, conduits, piping, duct work or structural supports (i.e. post tension cables or rebar)) will interfere or come in contact with subsurface penetration operations (e.g. drilling and installation of anchors/screws) performed during the installation process. To ensure worker safety, GE installers will perform surface penetration operations only after the customer's validation and completion of the "GE surface penetration permit"

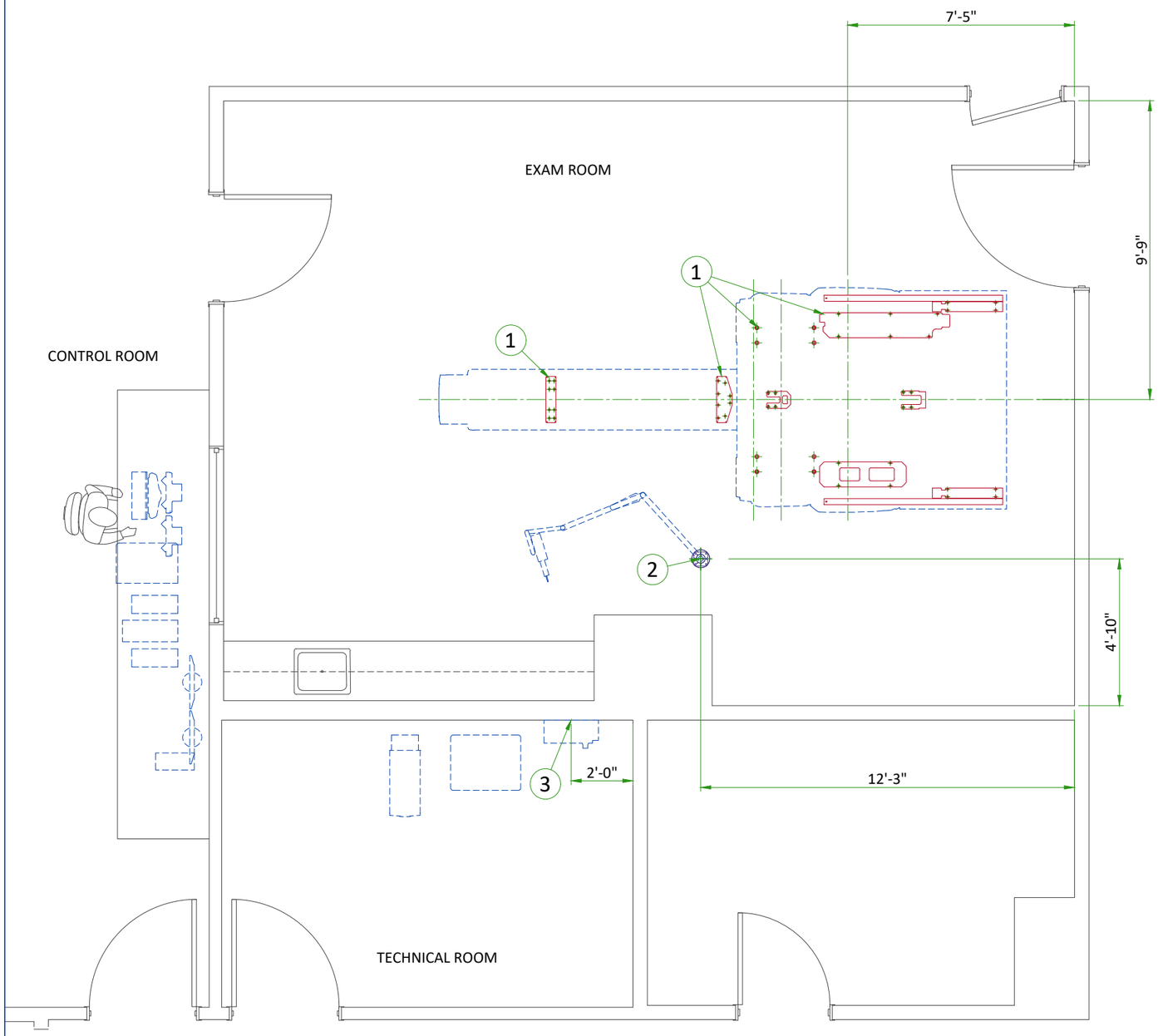

ITEM	DESCRIPTION
	(CONTRACTOR SUPPLIED & INSTALLED)
1	Floor contact area for discovery gantry and patient table. See detail on sheet S3 for more information.
2	Structural supports for fastening the overhead counterpoised suspension. Support should run continuous with no fittings extending below face of channel, be parallel, square, and in the same horizontal plane, above finished ceiling. Ensure mounting surface is installed level or plumb within +/- 1 degree, and is structurally sufficient to maintain a level or plumb condition under 110 lb (50kg) system load and maximum system moment of 4400 in-lb (500n-m). Methods of support that will permit attachment to structural steel or through bolts in concrete construction should be favored. Do not use screw anchors in direct tension. 14" x 14" x 1/2" thick steel plate provided by manufacturer. See detail on structural detail sheets.
3	Support Backing, locate as shown

ANCHORING/LOADING DISTRIBUTION TO THE FLOOR

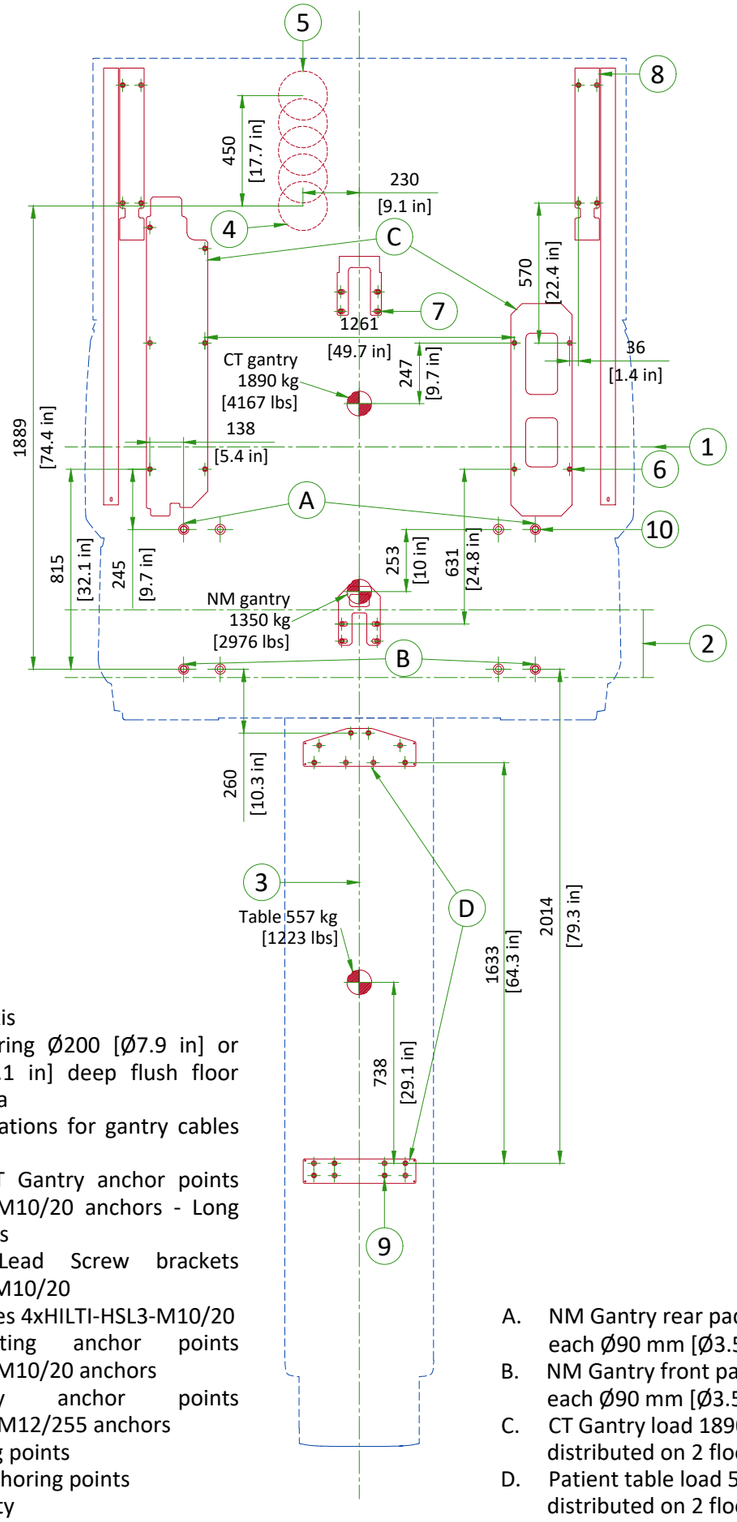

(1) CT Scan Line
(2) NM FOV
(3) Longitudinal Axis
(4) Cable inlet coring Ø200 [Ø7.9 in] or 200x80 [7.9x3.1 in] deep flush floor duct in this area
(5) Alternative locations for gantry cables inlet
(6) Transporter CT Gantry anchor points 8×HILTI-HSL-3-M10/20 anchors - Long and short plates
(7) CT Service Lead Screw brackets 4xHILTI-HSL-3 M10/20
(8) CT Service Plates 4xHILTI-HSL3-M10/20
(9) Table mounting anchor points 8×HILTI-HSL-3-M10/20 anchors
(10) NM Gantry anchor points 4×HILTI-HST-3-M12/255 anchors

Main anchoring points
Alternative anchoring points
Center of gravity

A. NM Gantry rear pads 375 Kg [827 lb] on each Ø90 mm [Ø3.5 in] pad
B. NM Gantry front pads 300 Kg [661 lb] on each Ø90 mm [Ø3.5 in] pad
C. CT Gantry load 1890 Kg [4167 lb] distributed on 2 floor plates
D. Patient table load 557 Kg [1223 lb] distributed on 2 floor plates

SCALE 1:25

FLOOR SPECIFICATIONS

NM GANTRY MAIN ANCHORING

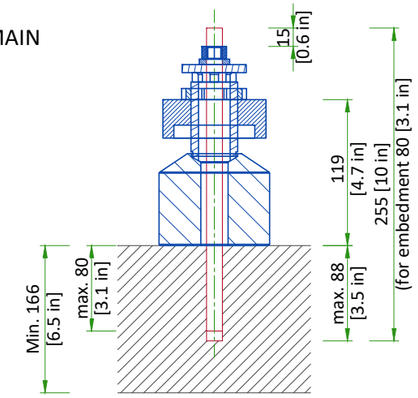

CT TRANSPORTER ANCHORING

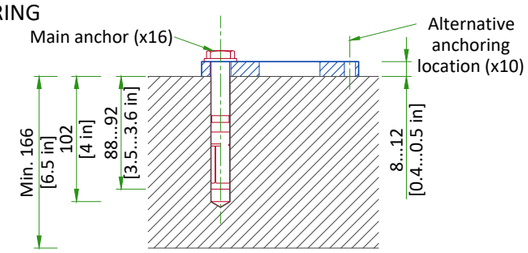

NOT TO SCALE

- Floor leveling area: 537 cm x 217 cm [17.6 ft x7.2 ft] (covering the entire planned area of table and gantry surface)
- Slope less than 7 mm [0.28 in] over 1000 mm [39.37 in]
- Flatness: the surface must be smooth, with deviations of no more than 5 mm [0.2 in] over 1500 mm [59 in] in any direction
- Floor surface: a single poured surface
- Floor strength: in order to enable mounting of the system floor anchors, concrete floors must have a minimum cube strength of fc=4350 psi. (30 MPa) at 28 days (curing time) for 25/30 concrete
- Floor thickness: the system's floor anchors are designed for use only on concrete floors that meet the minimal 166 mm [6.5 in] concrete floor requirements
- It is the customer/contractor responsibility to have appropriate tests performed to determine and measure concrete strength

CUSTOMER/CONTRACTOR SUPPLIED MOUNTING PLATE

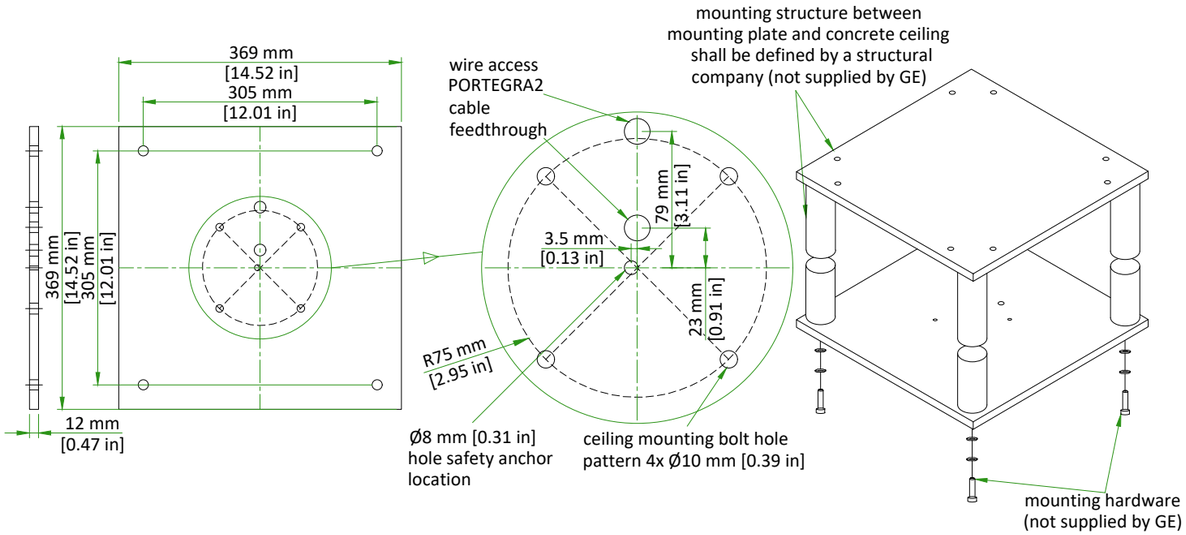

The exact location of all five drill holes for MAVIG column has to be kept, otherwise installation can't be accomplished.
Column flange and safety chain fixings to concrete or to structure other than MAVIG anchoring plate or MAVIG bridge shall be defined by a structural company.
All design and pre-installation activity must be done in accordance of the MAVIG Installation manual.
Contact your GE Project Manager for OEM documentation. Installation of mounting plate performed by GE or a GE sub-contractor.

NOT TO SCALE

CEILING SUSPENSION DISCLAIMER

Safety and precautionary comments:

Only qualified, licensed technicians can perform electrical connections, installation, removal and repair. It is strongly recommended that at least two persons perform the installation.

Installing the system: Prior to installation, a structural engineer must confirm that the mounting structure is strong enough to provide proper support for the entire system and any attached end devices. Installation must be completed according to local building codes.

Determination of required installation hardware and torque values for installation of the ceiling column and ceiling track is the sole responsibility of the structural engineer.

Ceiling mounted systems must be installed properly. Failure to follow the instructions provided may lead to a potentially dangerous and unstable condition of the system.

GE and/or MAVIG is not responsible for unauthorized modifications made to the system or use of the system for unintended purposes. GE and/or MAVIG cannot be held liable for improper operation and modifications. Since improper modifications may impair proper operation, safety or reliability of the system, product modifications require written authorization from MAVIG.

Under GE responsibility or under Customer responsibility, for all pre-installations, whatever is the supporting structure (bridge, chair, Unistrut channel, other channels, direct anchorage in concrete, transversal beam, etc. …) a certificate must be obtained from a structural engineer.

This certificate shall include the definition of fasteners and of their tightening torque, especially for the non-standard cases described in MAVIG PIM and for which the standard anchoring/screws delivered with product shall not be used but shall be defined (and implemented in most cases) by the structural company.

WARNING:

It is prohibited to alter the length of the ceiling column or remove any securing screws.

SUSPENSION COLUMN LENGTHS AND INSTALLATION DETAILS

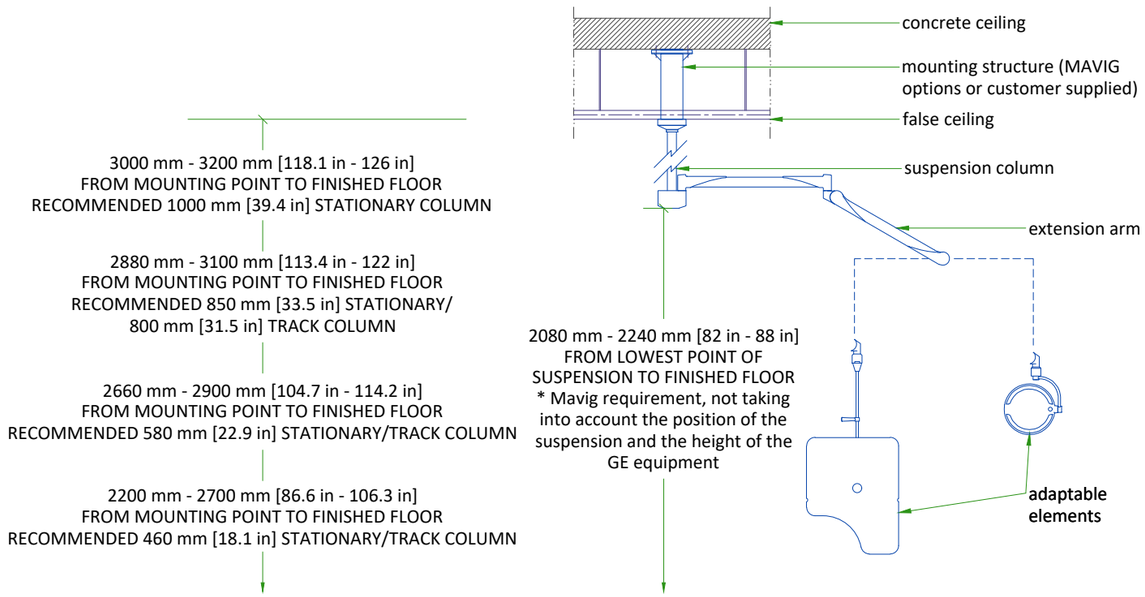

- Available column lengths might differ, please refer to the GE commercial catalog for current selection options
- For rooms with higher mounting point than 3200 mm [126 in], a ceiling construction between structural ceiling and vertical column is suggested which needs to be designed by a structural engineer
- All design and pre-installation activity must be done in accordance of the MAVIG Installation manual
- Contact your GE Project Manager for OEM documentation
- Installation of mounting plate performed by GE or a GE sub-contractor

NOT TO SCALE

PORTEGRA2 COLUMN ASSEMBLY

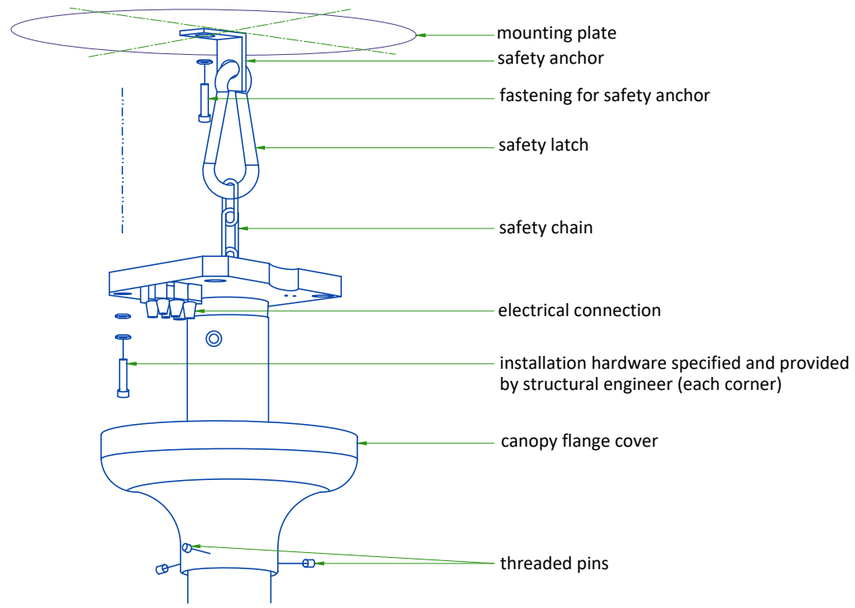

- Safety chain shall be always attached.
- Do not use shims between column and mounting surface.

All design and pre-installation activity must be done in accordance of the MAVIG Installation manual.
Contact your GE Project Manager for OEM documentation. Installation of mounting plate performed by GE or a GE sub-contractor.

NOT TO SCALE

TEMPERATURE AND HUMIDITY SPECIFICATIONS

IN-USE CONDITIONS

	EXAM ROOM			CONTROL ROOM			TECHNICAL ROOM		
	Min	Recommended	Max	Min	Recommended	Max	Min	Recommended	Max
Temperature	18°C [64°F]	22°C [72°F]	26°C [79°F]	18°C [64°F]	22°C [72°F]	26°C [79°F]	18°C [64°F]	22°C [72°F]	26°C [79°F]
Temperature gradient	**≤ 3°C/h [≤ 5°F/h]**			**≤ 3°C/h [≤ 5°F/h]**			**≤ 3°C/h [≤ 5°F/h]**		
Relative humidity (1)	30% to 70%			30% to 70%			30% to 70%		
Humidity gradient	**≤ 5%/h**			**≤ 5%/h**			**≤ 5%/h**		

CT STORAGE CONDITIONS (2)

Temperature	0°C to +30°C
	32°F to +86°F
Temperature gradient	**≤ 3°C/h**
	≤ 5°F/h
Relative humidity (1)	≤ 70%
Humidity gradient	**≤ 5%/h**

(1) non condensing
(2) NM subsystem: The NM gantry is shipped via Pharma shipment, in a controlled environment, therefore no precautions related to environmental conditions during shipment are defined.

AIR RENEWAL

According to local standards.

NOTE
In case of using air conditioning systems that have a risk of water leakage it is recommended not to install it above electric equipment or to take measures to protect the equipment from dropping water.

HEAT DISSIPATION

ROOM	DESCRIPTION	HEAT DISSIPATION (kW)	HEAT DISSIPATION (BTU/hr)
		MAX	MAX
Exam Room	NM Gantry	3.30	11320
	CT Gantry	2.75	9383
	Patient Table	0.20	682
	Power Distribution Unit (PDU)	1.50	5118
	Partial UPS	1.50	5122
	TOTAL	**9.25**	**31625**
Control Room	CT console	2.40	8189
	NM Acquisition Station (computer only)	0.08	256
	Smart Console (computer only)	0.08	256
	Image Generator Console (computer only)	0.15	510
	Xeleris Workstation (computer with 2 monitors)	0.08	256
	TOTAL	**2.78**	**9467**

CONNECTIVITY REQUIREMENTS

NETWORK REQUIREMENTS

The system requires the following network connections:

- Broad-Band Network Connection (BBNC) (reuired)
- Local Area Network (LAN) (required)
- Wide Area Network (WAN) (optional)

RSVP REQUIREMENTS

The system requires direct internet connectivity as follows:

- The system allows for DNS configuration or Proxy server connection to the internet.
- The current internet connection supporting InSite connection can be reused.
- RSVP meets the security specifications defined in the product's Privacy and Security Manual or relevant software document
- Proxy configuration for internet access may also include authentication credentials. Local IT contact must be able to authenticate these details on the details if necessary.
- It is not recommended to route the connection over an existing site VPN tunnel. If the customer requires the use of VPN tunnel, a case must be escalated to the local connectivity team.

For more information please contact your Project Manager of Installation.

ELECTRICAL NOTES

1. All wires specified shall be copper stranded, flexible, thermo-plastic, color coded, cut 10 foot long at outlet boxes, duct termination points or stubbed conduit ends. All conductors, power, signal and ground, must be run in a conduit or duct system. Electrical contractor shall ring out and tag all wires at both ends. Wire runs must be continuous copper stranded and free from splices.

1.1. Aluminum or solid wires are not allowed.

2. Wire sizes given are for use of equipment. Larger sizes may be required by local codes.
3. It is recommended that all wires be color coded, as required in accordance with national and local electrical codes.
4. Conduit sizes shall be verified by the architect, electrical engineer or contractor, in accordance with local or national codes.
5. Convenience outlets are not illustrated. Their number and location are to be specified by others. Locate at least one convenience outlet close to the system control, the power distritbution unit and one on each wall of the procedure room. Use hospital approved outlet or equivalent.
6. General room illumination is not illustrated. Caution should be taken to avoid excessive heat from overhead spotlights. Damage can occur to ceiling mounting components and wiring if high wattage bulbs are used. Recommend low wattage bulbs no higher than 75 watts and use dimmer controls (except MR). Do not mount lights directly above areas where ceiling mounted accessories will be parked.
7. Routing of cable ductwork, conduits, etc., must run direct as possible otherwise may result in the need for greater than standard cable lengths (refer to the interconnection diagram for maximum usable lengths point to point).
8. Conduit turns to have large, sweeping bends with minimum radius in accordance with national and local electrical codes.
9. A special grounding system is required in all procedure rooms by some national and local codes. It is recommended in areas where patients might be examined or treated under present, future, or emergency conditions. Consult the governing electrical code and confer with appropriate customer administrative personnel to determine the areas requiring this type of grounding system.
10. The maximum point to point distances illustrated on this drawing must not be exceeded.
11. Physical connection of primary power to GE equipment is to be made by customers electrical contractor with the supervision of a GE representative. The GE representative would be required to identify the physical connection location, and insure proper handling of GE equipment.
12. GEHC conducts power audits to verify quality of power being delivered to the system. The customer's electrical contractor is required to be available to support this activity.

- All junction boxes, conduit, duct, duct dividers, switches, circuit breakers, cable tray, etc., are to be supplied and installed by customers electrical contractor.
- Conduit and duct runs shall have sweep radius bends
- Conduits and duct above ceiling or below finished floor must be installed as near to ceiling or floor as possible to reduce run length.
- Ceiling mounted junction boxes illustrated on this plan must be installed flush with finished ceiling.
- All ductwork must meet the following requirements:

1.Ductwork shall be metal with dividers and have removable, accessible covers.
2.Ductwork shall be certified/rated for electrical power purposes.
3.Ductwork shall be electrically and mechanically bonded together in an approved manner.
4.PVC as a substitute must be used in accordance with all local and national codes.

- All openings in raceway and access flooring are to be cut out and finished off with grommet material by the customers contractor.
- General contractor to insert pull cords for all cable run conduits between the equipment room and the operators control room.
- 10 foot pigtails at all junction points.
- Grounding is critical to equipment function and patient safety. Site must conform to wiring specifications shown on this plan.

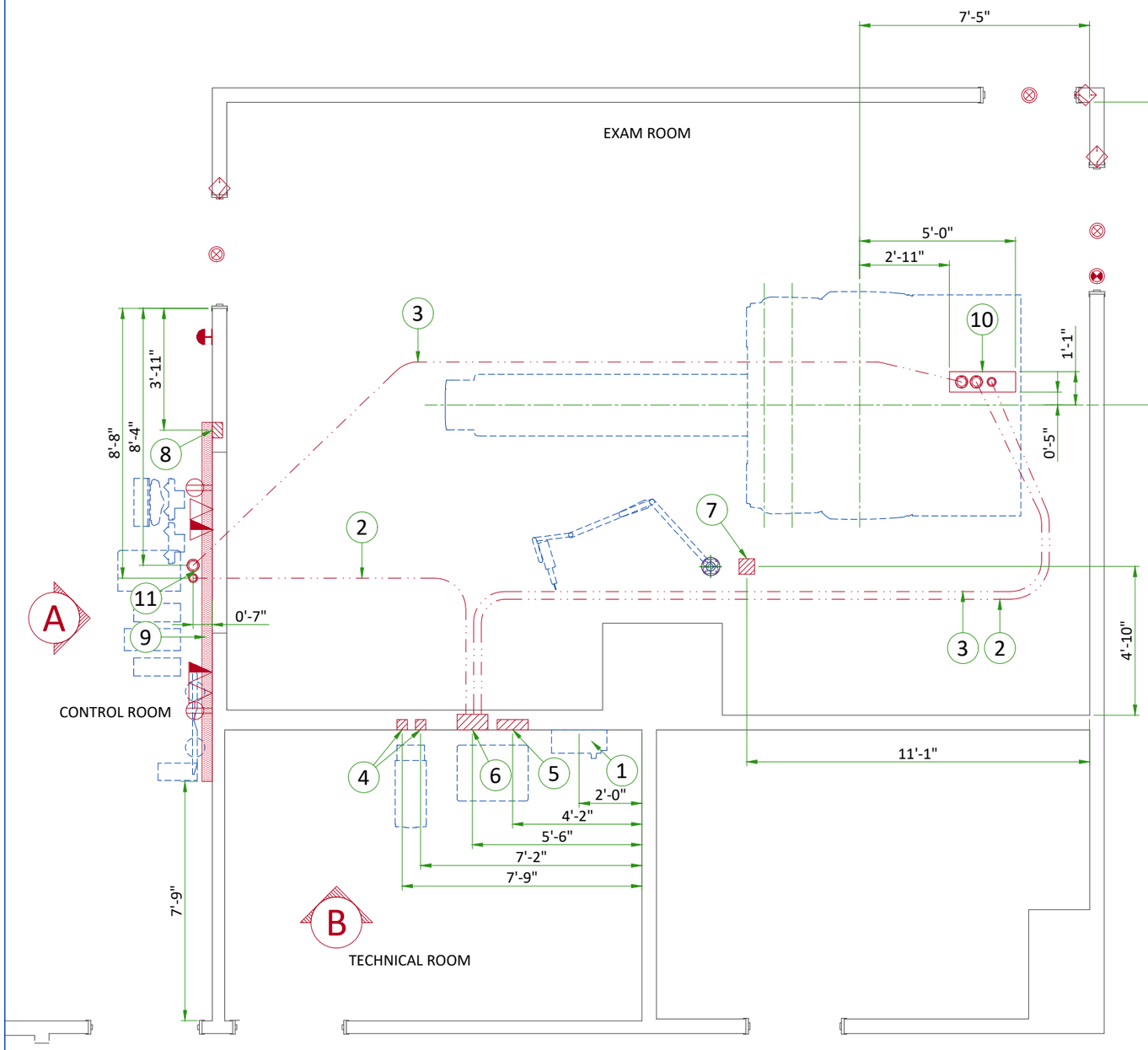

ITEM	DESCRIPTION
1	Main disconnect panel (recommended 1 1/2m [60 in] floor to middle of panel)
2	2 1/2" [64] conduit below floor
3	3 1/2" [89] conduit below floor
4	4" x 4" x 4" [100 x 100 x 100] box 18" [450] above finished floor (Partial UPS)
5	12" x 16" x 4" [300 x 400 x 100] box (Power Distribution Unit)
6	12" x 16" x 6" [300 x 400 x 150] box (Power Distribution Unit)
7	6" x 6" x 4" [150 x 150 x 100] box (injector)
8	6" x 6" x 4" [150 x 150 x 100] box (injector control)
9	10" x 3 1/2" [250 x 100] surface wall duct with minimum 2 dividers for cable storage
10	Suitable bushings & lock nuts (Gantry)
11	Suitable bushings & lock nuts (Operator's console)

ITEM	QTY	Outlet Legend for GE Equipment
		System emergency off (SEO), (recommended height 1.2m [48"] above floor)
		X-Ray room warning light control panel
		X-Ray ON lamp (L1) - 24V
		Door interlock switch (needed only if required by state/local codes)
		Dedicated telephone line(s)
		Network outlet
		Duplex hospital grade, dedicated wall outlet 120-v, single phase power
		Duplex hospital grade, dedicated outlet 120-v, single phase outlet 20 amp

Additional Conduit Runs
(Contractor Supplied and Installed)

From (Bubble # / Item)		To (Bubble # / Item)		Qty	Size In.	Size mm
	3 Phase Power	1	Main Disconnect	1	As req'd	As req'd
1	Main Disconnect		Emergency Off	1	1/2	13
		5	Power Distribution Unit	1	As req'd	As req'd
5	Power Distribution Unit		Door Switch	1	1/2	13
			Warning Light Control	1	1/2	13
	Warning Light			1	1/2	13
	1 Phase Power			1	1/2	13
1	Main Disconnect Panel	4	Partial UPS	1	1 1/4	30
6	Power Distribution Unit			1	2	50
7	Injector	8	Injector Control	1	2 1/2	64

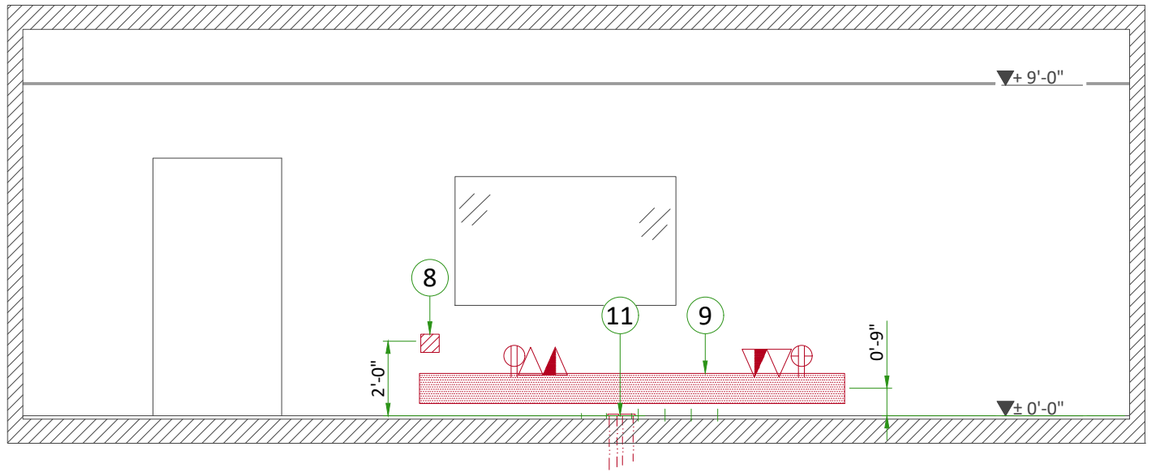

A

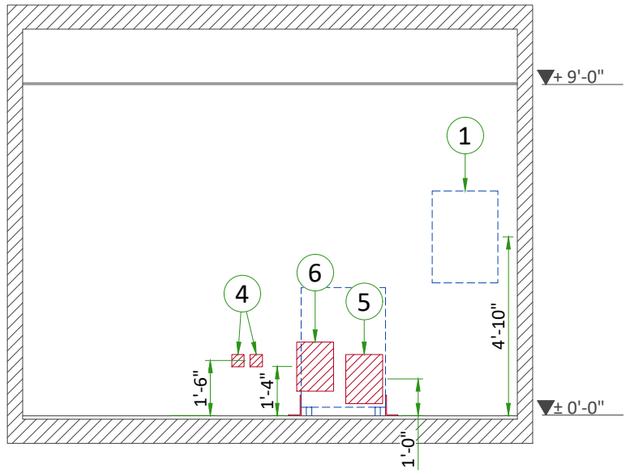

B

POWER REQUIREMENTS

POWER SUPPLY

POWER SUPPLY	**3 PHASES+N+G 380 to 480 VAC ± 6%**
FREQUENCIES	**50/60 Hz ± 3 Hz**
MAXIMUM POWER DEMAND	**90 kVA**
AVERAGE (CONTINUOUS) POWER DEMAND	**22 kVA**
POWER FACTOR	**0.85 (140 kV, 380 mA)**

- Power supply should come into a Main Disconnect Panel (MDP) containing the protective units and controls.
- The section of the supply cable should be calculated in accordance with its length and the maximum permissible voltage drops.
- There must be difference between supply cable protective device at the beginning of the installation (main low-voltage transformer side) and the protective devices in the MDP.

SUPPLY CHARACTERISTICS

- Power input must be separate from any others which may generate transients (elevators, air conditioning, radiology rooms equipped with high speed film changers...).
- All equipment (lighting, power outlets, etc...) installed with GE system components must be powered separately.
- Phase imbalance 2% maximum.
- Maximum voltage variation at full load = 6% (Including line impedance).
- Transients must be less than 1500 V peak. (on a 400 V line)

GROUND SYSTEM

- System of equipotential grounding.
- Equipotential: The equipotential link will be by means of an equipotential bar. This equipotential bar should be connected to the protective earth conductors in the ducts of the non GE cableways and to additional equipotential connections linking up all the conducting units in the rooms where GE system units are located.
- The impedance of the earth bar should be less than or equal to 0.5 Ohm.

CABLES

- Power and cable installation must comply with the distribution diagram.
- All cables must be isolated and flexible, cable color codes must comply with standards for electrical installation.
- The cables from signaling and remote control (Y, SEO, L...) will go to MDP with a pigtail length of 1.5 m, and will be connected during installation. Each conductor will be identified and isolated (screw connector).

CABLEWAYS

The general rules for laying cableways should meet the conditions laid down in current standards and regulations, with regard to:

- Protecting cables against water (cableways should be waterproof).
- Protecting cables against abnormal temperatures (proximity to heating pipes or ducts).
- Protecting cables against temperature shocks.
- Replacing cables (cableways should be large enough for cables to be replaced).
- Metal cableways should be grounded.

POWER DISTRIBUTION

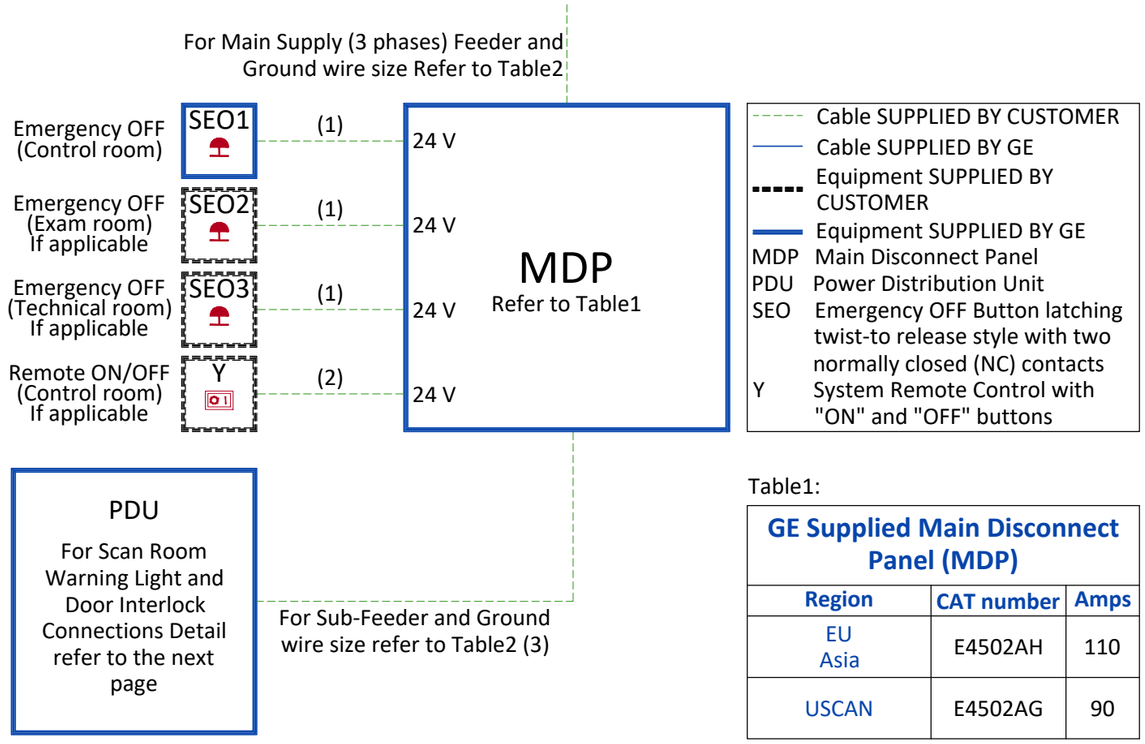

Table1:

GE Supplied Main Disconnect Panel (MDP)		
Region	**CAT number**	**Amps**
EU Asia	E4502AH	110
USCAN	E4502AG	90

Table2:

Feeder Table						
The information below assumes the use of copper wire, rated 75 C and run in steel conduit. All ampacity is determined in accordance with the National Electrical Code (NFPA 70), Table 310-16 (2002). The ampacity of the circuit protection device listed above determines the minimum feeder size, except where total source regulation limits require a larger size.						
Feeder length from Power Substation to MDP - ft (m)	**Minimum Wire Size, AWG or MCM (mm²)/VAC**					
	380 VAC	400 VAC	420 VAC	440 VAC	460 VAC	480 VAC
50 (15)	2 (35)	2 (35)	3 (30)	3 (30)	3 (30)	3 (30)
100 (30)	2 (35)	2 (35)	3 (30)	3 (30)	3 (30)	3 (30)
150 (46)	2 (35)	2 (35)	3 (30)	3 (30)	3 (30)	3 (30)
200 (61)	2 (35)	2 (35)	3 (30)	3 (30)	3 (30)	3 (30)
250 (76)	1 (45)	1 (45)	2 (35)	2 (35)	2 (35)	3 (30)
300 (91)	1/0 (55)	1/0 (55)	1 (45)	1 (45)	2 (35)	2 (35)
350 (107)	2/0 (70)	1/0 (55)	1/0 (55)	1 (45)	1 (45)	1 (45)
400 (122)	2/0 (70)	2/0 (70)	1/0 (55)	1/0 (55)	1/0 (55)	1 (45)
Sub-Feeder length from MDP to PDU - ft (m)						
32 (9.7536)	2 (35)	2 (35)	3 (30)	3 (30)	3 (30)	3 (30)
Grounding						
Run a dedicated 1/0 [50 mm²] or larger insulated copper ground wire from the power source to the MDP and from MDP to the PDU. Run the ground wire in the same raceway with the three-phase wires.						

Notes :

(1) Wire size: 2x2mm² [14AWG] and 1x2mm² [14AWG] GND

(2) Wire size: 6x2mm² [14AWG] and 1x2mm² [14AWG] GND

TYPICAL CABLE MANAGEMENT

CONDUIT IN THE FLOOR

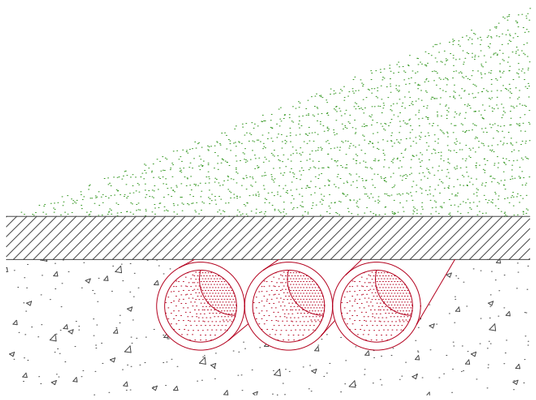

DUCT ON THE WALL

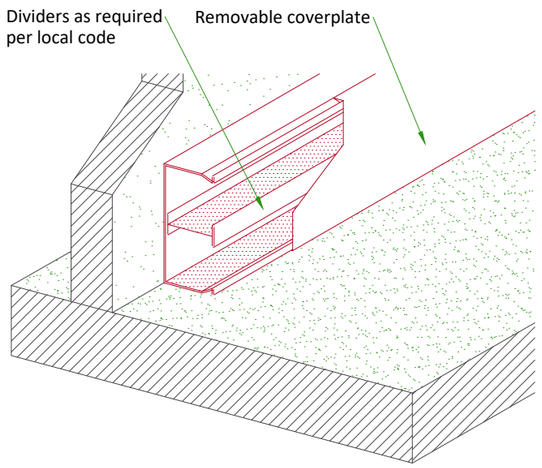

NOT TO SCALE

SCAN ROOM WARNING LIGHT AND DOOR INTERLOCK

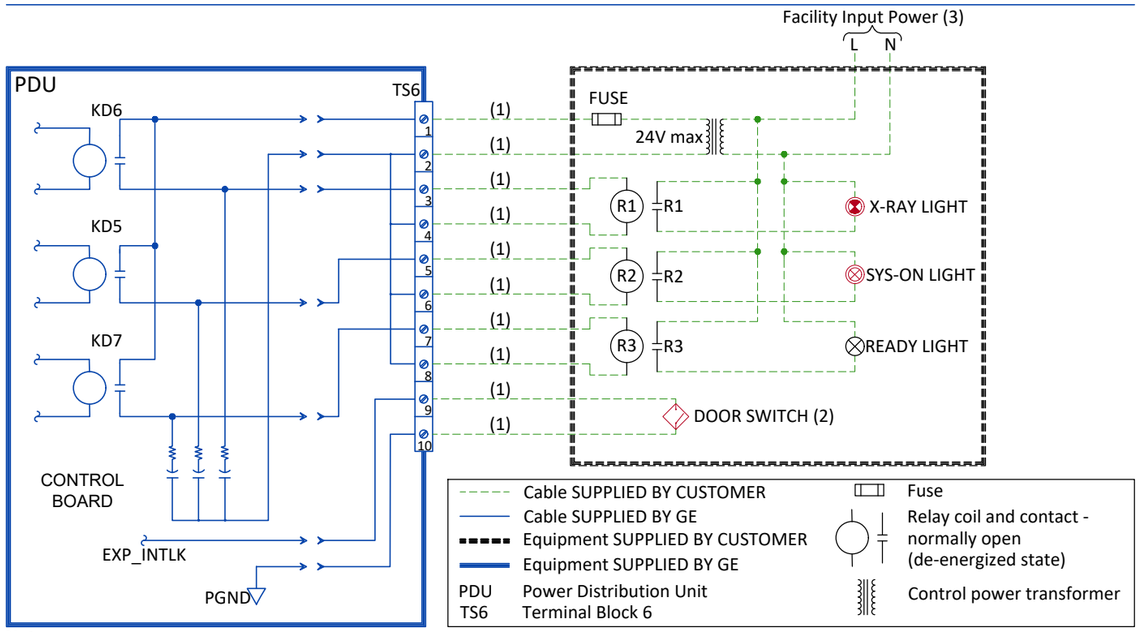

Notes :

(1) Wire size: 2mm² [14 AWG] at 24V

(2) Door Interlock circuit is jumpered out if a door switch is not provided.

(3) Grounding not shown on the detail, but must comply with local codes.
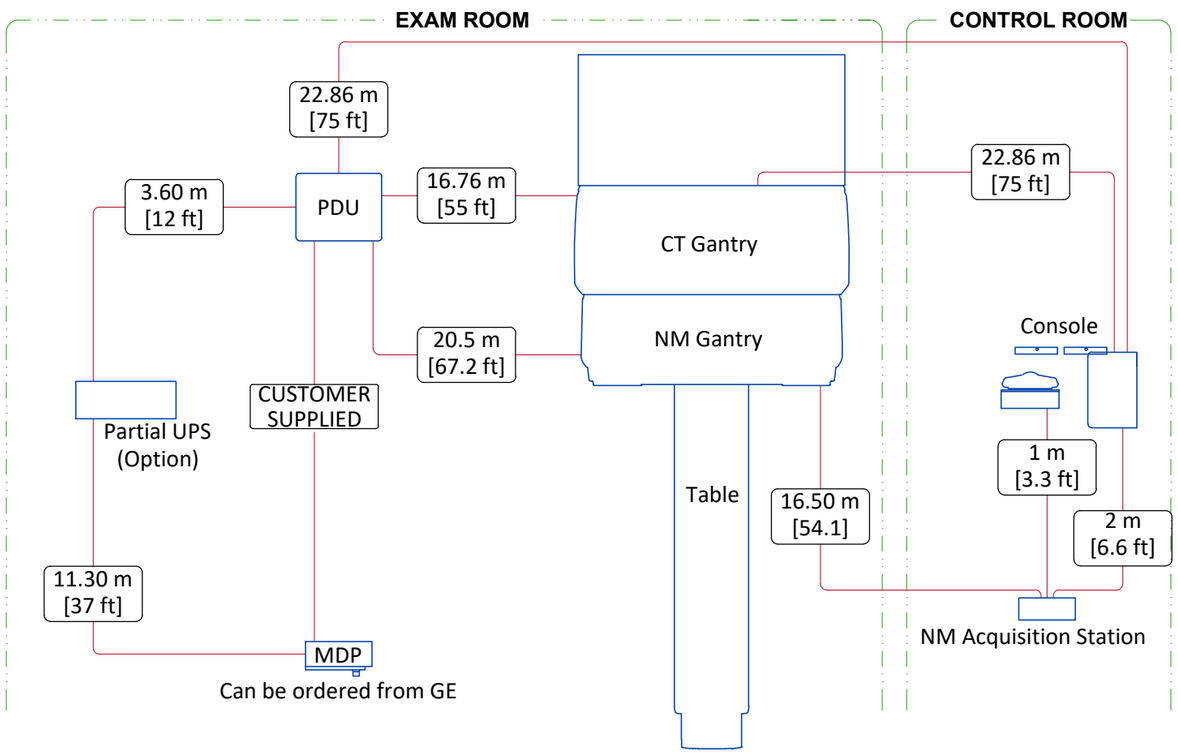
INTERCONNECTIONS