REV	DATE	MODIFICATIONS
A	10/Jul/2018	First issue drawing / Final study based on MRI-

Typical

---

01 - C1 - Cover Sheet
02 - C2 - Disclaimer - Site Readiness
03 - A1 - General Notes
04 - A2 - Equipment Layout
05 - A3 - Equipment Details
06 - A4 - Delivery
07 - S1 - Structural Notes
08 - S2 - Structural Layout
09 - S3 - Structural Details
10 - M1 - HVAC
11 - E1 - Electrical Notes
12 - E2 - Electrical Layout
13 - E3 - Elevations-Interconnections
14 - E4 - Power Requirements

A mandatory component of this drawing set is the GE Healthcare Pre Installation manual. Failure to reference the Pre Installation manual will result in incomplete documentation required for site design and preparation.
Pre Installation documents for GE Healthcare products can be accessed on the web at: www.gehealthcare.com/siteplanning

GE does not take responsibility for any damages resulting from changes on drawings made by others. Errors may occur by not referring to the complete set of final issue drawing. GE cannot accept responsibility for any damage due to the partial use of GE final issue drawings, however caused. All dimensions are in millimeters unless otherwise specified. Do not scale from printed pdf files. GE accepts no responsibility or liability for defective work due to scaling from these drawings.

GE Healthcare

DISCOVERY NM 530C
FINAL STUDY

Drawn by	Verified by	Concession	S.O. (GON)	PIM Manual	Rev
PMM	CPC	-	----	5454095-1EN	1

Format	Scale	File Name	Date	Sheet
A3	1/4"=1'-0"	EN-NUC-TYP-DISCOVERY_NM_530C-WEB.DWG	17/Jun/2021	01/14

DISCLAIMER

GENERAL SPECIFICATIONS

- GE is not responsible for the installation of developers and associated equipment, lighting, cassette trays and protective screens or derivatives not mentioned in the order.
- The final study contains recommendations for the location of GE equipment and associated devices, electrical wiring and room arrangements. When preparing the study, every effort has been made to consider every aspect of the actual equipment expected to be installed.
- The layout of the equipment offered by GE, the dimensions given for the premises, the details provided for the pre-installation work and electrical power supply are given according to the information noted during on-site study and the wishes expressed by the customer.
- The room dimensions used to create the equipment layout may originate from a previous layout and may not be accurate as they may not have been verified on site. GE cannot take any responsibility for errors due to lack of information.
- Dimensions apply to finished surfaces of the room.
- Actual configuration may differ from options presented in some typical views or tables.
- If this set of final drawings has been approved by the customer, any subsequent modification of the site must be subject to further investigation by GE about the feasibility of installing the equipment. Any reservations must be noted.
- The equipment layout indicates the placement and interconnection of the indicated equipment components. There may be local requirements that could impact the placement of these components. It remains the customer's responsibility to ensure that the site and final equipment placement complies with all applicable local requirements.
- All work required to install GE equipment must be carried out in compliance with the building regulations and the safety standards of legal force in the country concerned.
- These drawings are not to be used for actual construction purposes. The company cannot take responsibility for any damage resulting therefrom.

CUSTOMER RESPONSIBILITIES

- It is the responsibility of the customer to prepare the site in accordance with the specifications stated in the final study. A detailed site readiness checklist is provided by GE. It is the responsibility of the customer to ensure all requirements are fulfilled and that the site conforms to all specifications defined in the checklist and final study. The GE Project Manager of Installation (PMI) will work in cooperation with the customer to follow up and ensure that actions in the checklist are complete, and if necessary, will aid in the rescheduling of the delivery and installation date.
- Prior to installation, a structrual engineer of record must ensure that the floor and ceiling is designed in such a way that the loads of the installed system can be securely borne and transferred. The layout of additional structural elements, dimensioning and the selection of appropriate installation methods are the sole responsibility of the structural engineer. Execution of load bearing structures supporting equipment on the ceiling, floor or walls are the customer's responsibility.

RADIO-PROTECTION

- Suitable radiological protection must be determined by a qualified radiological physicist in conformation with local regulations. GE does not take responsibility for the specification or provision of radio-protection.

THE UNDERSIGNED, HEREBY CERTIFIES THAT I HAVE READ AND APPROVED THE PLANS IN THIS DOCUMENT.		
DATE	NAME	SIGNATURE

GLOBAL SITE READINESS CHECKLIST (DI)

DOC1809666 Rev. 7

Site Ready Checks at Installation
EHS Site Requirements
Overall access route to the scan room free from obstruction / high hazards.
Enough space to store tools, equipment, parts, install waste and the general area free from obstruction and trip hazards.
Enough necessary facilities for the GE employees available.
No 3rd parties working in the area that may affect the safety of the installation activity.
Area free from any chemical, gas, dust, welding fume exposure and has painting been completed and dry.
All emergency routes identified, signed and clear from obstruction.
Accessible single source lockable panel that LOTO can be applied to for GE equipment installation (MDP and/or PDU).
There are no other conditions or hazards that you have observed or have been made aware of by the customer or contractors on site.
Required for Mechanical Install start
Room dimensions, including ceiling height, for all Exam, Equipment/Technical & Control rooms meets GE specifications.
Ceiling support structure, if indicated on the GE drawing, is in the correct location and at the correct height according to the Original Equipment Manufacturer specifications.
Levelness and spacing has been measured, and is ready for the installation of any GE supplied components.
Overhead support Structure (unistrut) has been confirmed with customer/contractor to meet required GE provided criteria.
Finished ceiling is installed. If applicable ceiling tiles installed per PMI discretion.
Floor levelness/flatness is measured and within tolerance, and there are no visible defects per GEHC specifications.
Entry door threshold meets PIM requirement
Floor Strength and thickness have been discussed with customer/contractor and they have confirmed GE requirements are met.
Rooms that will contain equipment, including staging areas if applicable, are construction debris free. Precautions must be taken to prevent debris from entering rooms containing equipment.
Cable ways (floor/wall/ceiling/Access Flooring) are available for installation of GE cables are of correct length and diameter.
Cable ways routes per GE Final drawings and cable access openings areas installed at a time determined by GEHC PM. Surface floor duct can be installed at time of system installation.
Adequate room illumination installed and working.
Customer supplied countertops where GE equipment will be installed are in place.
Nuclear Medicine systems levelness measurement survey must be provided to GE prior the delivery.
Required for Calibration start
HVAC systems Installed, and the site meets minimum environmental operational system requirements.
System power & grounding (PDB/MDP) is available as per GE specifications.
System power & grounding (PDB/MDP) is installed at point of final connection and ready to use. Lock Out Tag Out is available.
PMI to confirm all feeder wires and breaker are size appropriately. EPO installed if needed.
PMI to confirm with electrician all power and signal cables are well terminated ensuring there are no loose connections.
Network outlets installed.
Computer network available and working.
Site has license for using/importing radioactive sources and a Hot Lab is available. Radioactive Sources should be available for system calibration during installation.
Lead doors and windows complete or scheduled to be installed. If applicable, radiation protection (shielding) finished & radioprotection regulatory approval for installation obtained.

Note: The details shown here are only an extract from DOC1809666. For the complete document please contact your PMI.

CUSTOMER SITE READINESS REQUIREMENTS

- Any deviation from these drawings must be communicated in writing to and reviewed by your local GE healthcare installation project manager prior to making changes.
- Make arrangements for any rigging, special handling, or facility modifications that must be made to deliver the equipment to the installation site. If desired, your local GE healthcare installation project manager can supply a reference list of rigging contractors.
- New construction requires the following;
  1. Secure area for equipment,
  2. Power for drills and other test equipment,
  3. Capability for image analysis,
  4. Restrooms.
- Provide for refuse removal and disposal (e.g. crates, cartons, packing)
- For CT, MR, PET/CT, and SPECT systems it is required to minimize vibrations within the scan room. It is the customer's responsibility to contract a vibration consultant/engineer to implement site design modifications to meet the GE vibration specification. Refer to the system preinstallation manual for vibration specifications.

ENVIRONMENT

MAGNETIC FIELD SPECIFICATIONS

In order to avoid interference on the system, the static field limits from the surrounding environment must be less than 1 Gauss in both the scan and the operator rooms.

In order to avoid interference on the system, static field limits from the surrounding environment are specified below.

- Static field must be less than 1 Gauss in Examination room, and in the Control Area.
- Static field must be less than 3 Gauss in the Technical Room.

ELECTROSTATIC DISCHARGE ENVIRONMENT & RECOMMENDATIONS

In order to reduce electrostatic discharge interference, install a charge dissipative floor material to avoid electrostatic charge buildup.
The relative humidity shall be at least 30 percent.
The dissipative material shall be connected to the system ground reference, if applicable.

EMC COMPLIANCE

This system complies with IEC60601-1-2 (2007-03) EMC standard for medical electrical equipment.

RADIOACTIVE ISOTOPES

USING RADIOACTIVE ISOTOPES

Since this equipment involves the use of radioactive isotopes, compliance with Nuclear Regulatory Commission regulations, or similar regulatory requirements (depending on the country), must be adhered to.
In most situations, this must be done prior to acquiring any source materials. This includes calibration sources which may have fairly long delivery lead times. These calibration sources may also have a short half life, and it may not be advisable to store them over long periods of time.
Regulatory compliance should be arranged early in the site planning process.

RADIOACTIVE ISOTOPES FOR SYSTEM CALIBRATION

A Co57 Square Flood Source for QC and Maps creation, with an activity of 20 mCi, must be pre-ordered and available on site before installation commences.

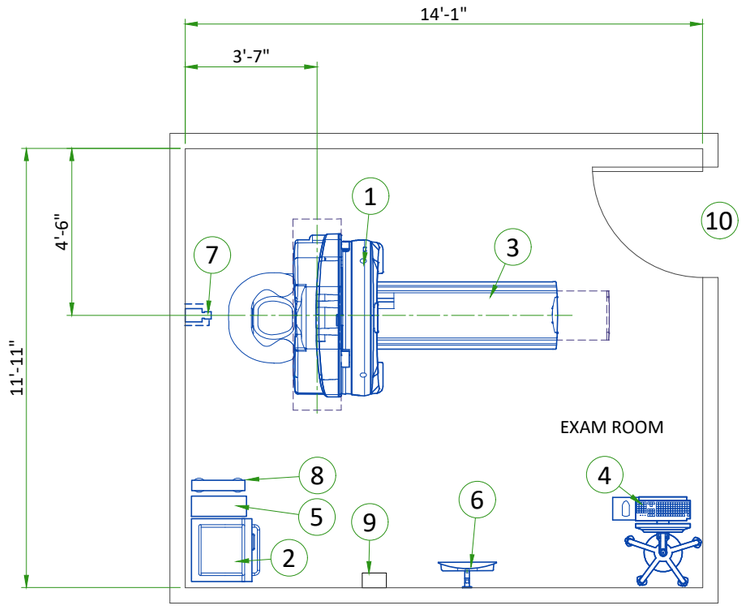

LEGEND			
A	GE Supplied	D	Available from GE
B	GE Supplied/contractor installed	E	Equipment existing in room
C	Customer/contractor supplied and installed	*	Item to be reinstalled from another site

BY	ITEM	DESCRIPTION	MAX HEAT OUTPUT (btu)	WEIGHT (lbs)	MAX HEAT OUTPUT (W)	WEIGHT (kg)
A	1	Gantry	2150	1433	630	650
A	2	Integrated Power Supply	205	172	60	78
A	3	Patient table	510	573	150	260
A	4	Operators console on cart	273	33	80	15
A	5	Acquisition computer	510	287	150	130
A	6	Patient Positioning Monitor	102	-	30	-
A	7	Patient Positioning Camera	-	-	-	-
D	8	UPS system	4436	33	1300	15
C	9	Main Disconnect				
C	10	Minimum opening for equipment delivery is 36 in. w x 83 in. h, contingent on a 53 in. corridor width				

Exam room height	
Finished floor to slab height	TBD
Recommended finished ceiling height	8'-0"

For Accessory Sales: (866) 281-7545 Options 1, 2, 1, 2 or mail to: gehcaccessorysales@ge.com

GANTRY AND PATIENT TABLE

SIDE VIEW

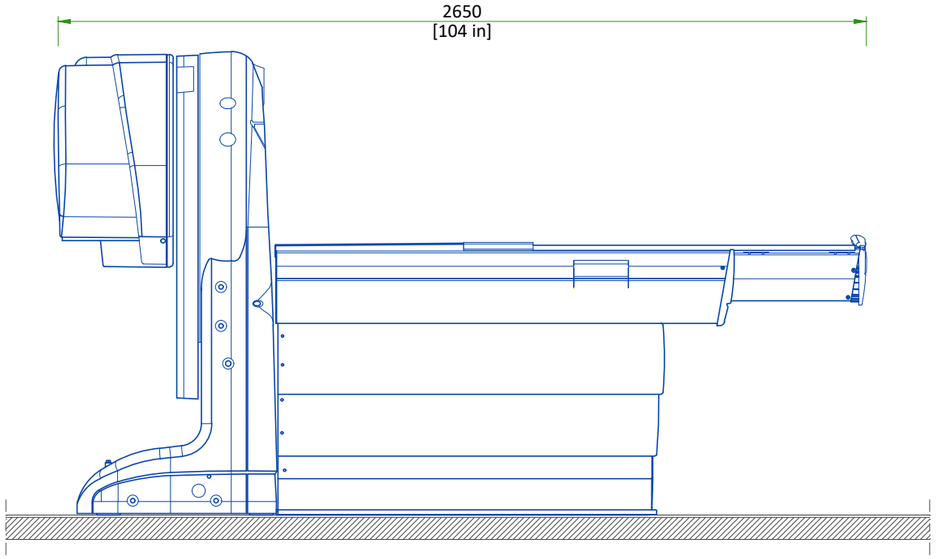

PATIENT TABLE

SIDE VIEW

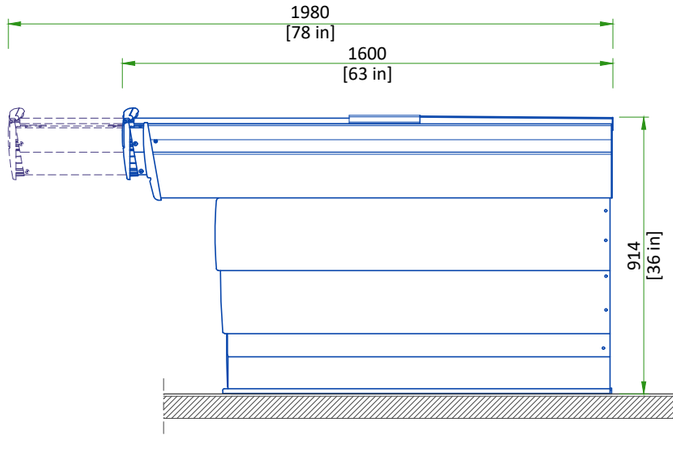

FRONT VIEW

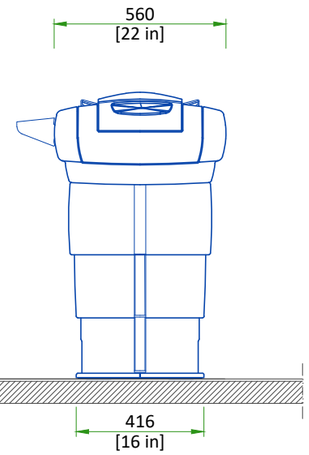

AQUISITION STATION ON CART (AC2)

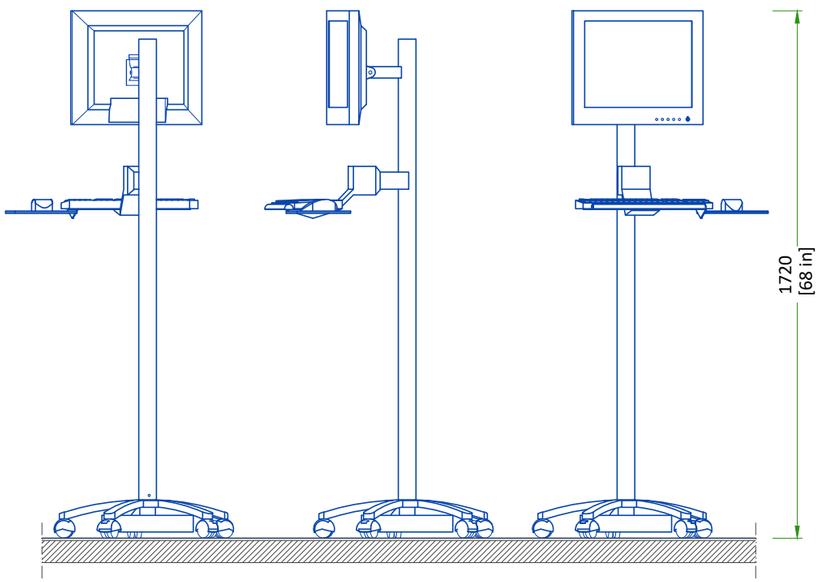

SIDE VIEWS

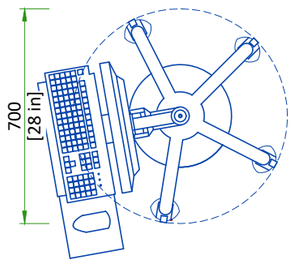

TOP VIEW

IPS

FRONT VIEW

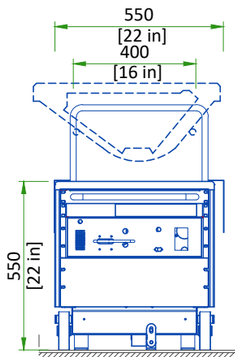

REAR VIEW

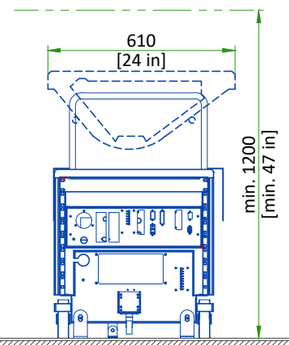

SIDE VIEW

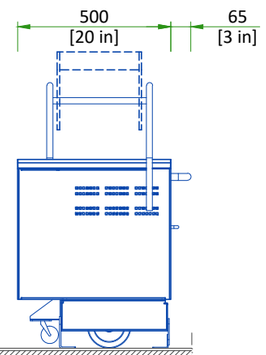

TOP VIEW

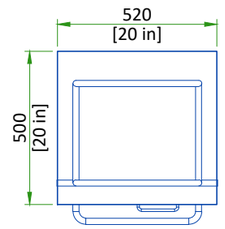

DELIVERY

THE CUSTOMER/CONTRACTOR SHOULD:

- Provide an area adjacent to the installation site for delivery and unloading of the GE equipment.
- Ensure that the dimensions of all doors, corridors, ceiling heights are sufficient to accommodate the movement of GE equipment from the delivery area into the definitive installation room.
- Ensure that access routes for equipment will accommodate the weights of the equipment and any transportation, lifting and rigging equipment.
- Ensure that all necessary arrangements for stopping and unloading on public or private property not belonging to the customer have been made.

UNPACKED COMPONENT DIMESIONS

EQUIPMENT	DIMENSIONS		WEIGHT
GANTRY WITHOUT TRIPLETS	LENGTH	735 mm [28.9 in]	590 kg [1300 lb]
	WIDTH	1350 mm [53 in]	
	HEIGHT	1550 mm [61 in]	
GANTRY-FULL CONFIGURATION WITH TRIPLETS	LENGTH	735 mm [28.9 in]	650 kg [1433 lb]
	WIDTH	1350 mm [53 in]	
	HEIGHT	1550 mm [61 in]	
PATIENT TABLE	LENGTH	1400 mm [55 in]	260 kg [573 lb]
	WIDTH	550 mm [21.6 in]	
	HEIGHT	550 mm [21.6 in]	

STRUCTURAL NOTES

- All units that are wall mounted or wall supported are to be provided with supports where necessary. Wall supports are to be supplied and installed by the customer or his contractors. See plan and detail sheets for suggested locations and mounting hole locations.
- Floor slabs on which equipment is to be installed must be flat and level to specifications.
- Dimensions are to finished surfaces of room.
- For seismic regions ensure supports span three members.
- Customers contractor must provide all penetrations in post tension floors.
- Customers contractor must provide and install any non-standard anchoring. Documents for standard anchoring methods are included with GE equipment drawings for geographic areas that require such documentation.
- Customers contractor must provide and install hardware for "through the floor" anchoring and/or any bracing under access floors. This contractor must also provide floor drilling that cannot be completed because of an obstruction encountered while drilling by the GE installer such as rebar etc.
- It is the customer's responsibility to perform any floor or wall penetrations that may be required. The customer is also responsible for ensuring that no subsurface utilities (e.g., electrical or any other form of wiring, conduits, piping, duct work or structural supports (i.e. post tension cables or rebar)) will interfere or come in contact with subsurface penetration operations (e.g. drilling and installation of anchors/screws) performed during the installation process. To ensure worker safety, GE installers will perform surface penetration operations only after the customer's validation and completion of the "GE surface penetration permit"

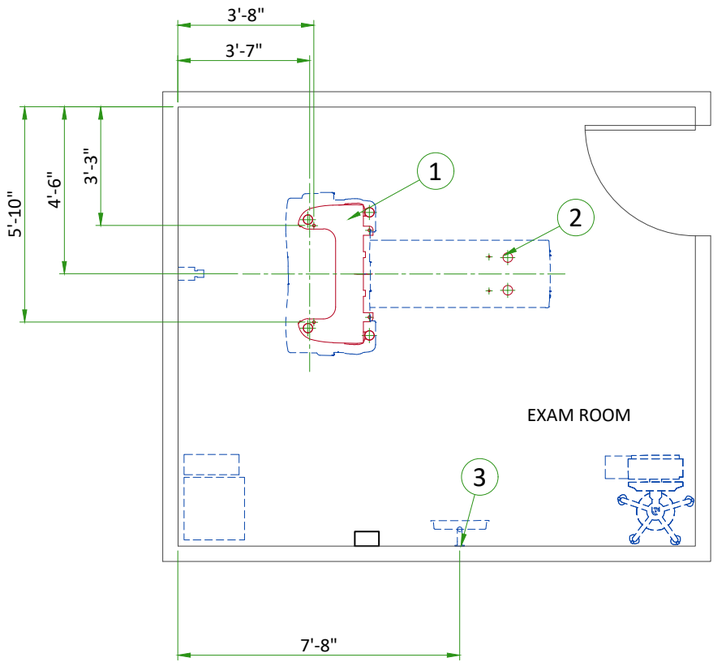

ITEM	DESCRIPTION
(GE SUPPLIED / CONTRACTOR INSTALLED)	
1	Gantry floor contact area
2	Table floor contact area
3	Structural wall backing

LOADING DISTRIBUTION TO THE FLOOR

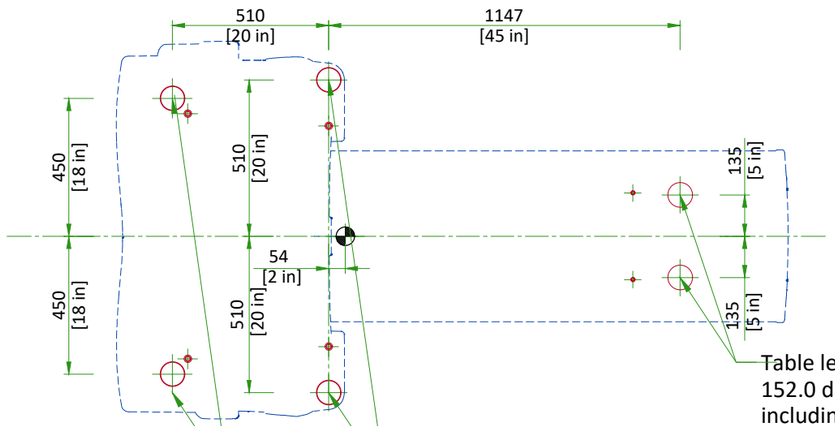

Table legs (Ø80 [Ø3.1 in])
152.0 daN per pad
including 78.5 daN for
patient

Gantry legs (Ø76 [Ø3 in])
335.3 daN per pad including
127.4 daN for patient

Gantry-Table legs (Ø76 [Ø3 in])
418.7 daN per pad including
78.5 daN for patient

Center of gravity

Gantry weight:	650 kg [1433 lb]
Table weight:	320 kg [705 lb]

FLOOR SPECIFICATIONS

FLOOR LOADING

- The floor must be capable of supporting the weight of the equipment and accessories.
- When the floor does not meet level and flatness specifications, the floor will need to be corrected. The entire area of the installation room should be leveled.
- No fill material is allowed as a patch to compensate for surface deviations. Patches will eventually crack and pop out.

FLOOR LEVELING SPECIFICATIONS	
Slope	±30 mm [±1 3/16 in] over 4300 mm [170 in]
Flatness	Surface should be smooth and have no more than 5 mm [3/16 in] deviation in any 1520 mm [60 in] throughout the room or system installation area
Floor surface	Floor should have one single poured surface

TEMPERATURE AND HUMIDITY SPECIFICATIONS

IN-USE CONDITIONS

	EXAM/CONTROL ROOM	
Temperature	Min	Max
	18 °C [64 °F]	25 °C [77 °F]
Temperature gradient	**≤ 3 °C/h [≤ 5.4 °F/h]**	
Relative humidity (1)	40% to 60%	
Humidity gradient	**≤ 5%/h**	

STORAGE CONDITIONS

	System without Detector Triplets	Detector Triplets
Temperature	-20°C to +60°C [-4°F to 140°F]	+10°C to +30°C [50°F to 86°F]
Relative humidity (1)	15% to 90%	
Humidity gradient	**≤ 5%/h**	
Air pressure	700 hPA to 1060 hPa	

(1) non condensing

AIR RENEWAL

According to local standards.

NOTE
In case of using air conditioning systems that have a risk of water leakage it is recommended not to install it above electric equipment or to take measures to protect the equipment from dropping water.

HEAT DISSIPATION

ROOM	DESCRIPTION	HEAT DISSIPATION (kW)	HEAT DISSIPATION (BTU/hr)
		MAX	MAX
Exam Room	Gantry	0.63	2150
	Chiller	0.30	1020
	Patient table	0.15	510
	IPS	0.06	205
	Acquisition station	0.15	510
	Monitor	0.08	273
	2 kVA UPS (E4502K)	1.30	4436
	TOTAL	**2.67**	**9104**

CONNECTIVITY REQUIREMENTS

Broadband Connections are necessary during the installation process and going forward to ensure full support from the Engineering Teams for the customers system. Maximum performance and availability for the customers system is maintained and closely monitored during the lifetime of the system. Proactive and reactive maintenance is available utilising the wide range of digital tools using the connectivity solutions listed below:

- Site-to-Site VPN/GE Solution
- Site-to-Site VPN/Customer Solution
- Connection through Dedicated Service Network
- Internet Access - connectivity for InSite 2.0

The requirements for these connectivity solutions are explained in the broadband solutions catalogue (separate document).

ELECTRICAL NOTES

1. All wires specified shall be copper stranded, flexible, thermo-plastic, color coded, cut 10 foot long at outlet boxes, duct termination points or stubbed conduit ends. All conductors, power, signal and ground, must be run in a conduit or duct system. Electrical contractor shall ring out and tag all wires at both ends. Wire runs must be continuous copper stranded and free from splices.

1.1. Aluminum or solid wires are not allowed.

2. Wire sizes given are for use of equipment. Larger sizes may be required by local codes.
3. It is recommended that all wires be color coded, as required in accordance with national and local electrical codes.
4. Conduit sizes shall be verified by the architect, electrical engineer or contractor, in accordance with local or national codes.
5. Convenience outlets are not illustrated. Their number and location are to be specified by others. Locate at least one convenience outlet close to the system control, the power distritbution unit and one on each wall of the procedure room. Use hospital approved outlet or equivalent.
6. General room illumination is not illustrated. Caution should be taken to avoid excessive heat from overhead spotlights. Damage can occur to ceiling mounting components and wiring if high wattage bulbs are used. Recommend low wattage bulbs no higher than 75 watts and use dimmer controls (except MR). Do not mount lights directly above areas where ceiling mounted accessories will be parked.
7. Routing of cable ductwork, conduits, etc., must run direct as possible otherwise may result in the need for greater than standard cable lengths (refer to the interconnection diagram for maximum usable lengths point to point).
8. Conduit turns to have large, sweeping bends with minimum radius in accordance with national and local electrical codes.
9. A special grounding system is required in all procedure rooms by some national and local codes. It is recommended in areas where patients might be examined or treated under present, future, or emergency conditions. Consult the governing electrical code and confer with appropriate customer administrative personnel to determine the areas requiring this type of grounding system.
10. The maximum point to point distances illustrated on this drawing must not be exceeded.
11. Physical connection of primary power to GE equipment is to be made by customers electrical contractor with the supervision of a GE representative. The GE representative would be required to identify the physical connection location, and insure proper handling of GE equipment.
12. GEHC conducts power audits to verify quality of power being delivered to the system. The customer's electrical contractor is required to be available to support this activity.

- All junction boxes, conduit, duct, duct dividers, switches, circuit breakers, cable tray, etc., are to be supplied and installed by customers electrical contractor.
- Conduit and duct runs shall have sweep radius bends
- Conduits and duct above ceiling or below finished floor must be installed as near to ceiling or floor as possible to reduce run length.
- Ceiling mounted junction boxes illustrated on this plan must be installed flush with finished ceiling.
- All ductwork must meet the following requirements:

1.Ductwork shall be metal with dividers and have removable, accessible covers.
2.Ductwork shall be certified/rated for electrical power purposes.
3.Ductwork shall be electrically and mechanically bonded together in an approved manner.
4.PVC as a substitute must be used in accordance with all local and national codes.

- All openings in raceway and access flooring are to be cut out and finished off with grommet material by the customers contractor.
- General contractor to insert pull cords for all cable run conduits between the equipment room and the operators control room.
- 10 foot pigtails at all junction points.
- Grounding is critical to equipment function and patient safety. Site must conform to wiring specifications shown on this plan.

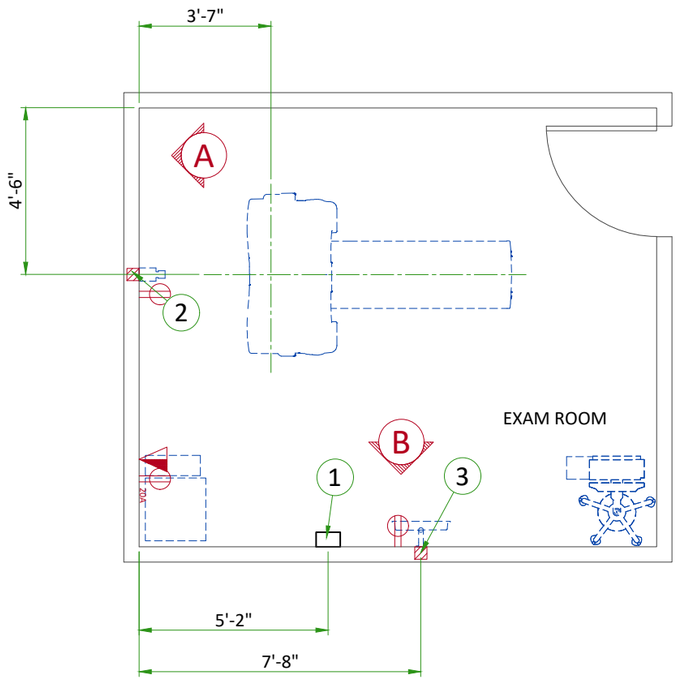

ITEM	QTY	ELECTRICAL LAYOUT ITEM LIST
1		20 Amp fused safety switch or circuit breaker
2		Single gang box & cover plate (Patient Positioning Camera)
3		Single gang box & cover plate (Patient Positioning Monitor)
		Duplex hospital grade, dedicated wall outlet 120-v, single phase power
		Network outlet
		20 amp Duplex hospital grade receptacle, powered from system main disconnect

Additional Conduit Runs
(Contractor Supplied and Installed)

From (Bubble # / Item)		To (Bubble # / Item)		Qty	Size In.	Size mm
1 Phase Power		1	Main Disconnect Panel	1	As req'd	As req'd
2	Patient Positioning Camera	3	Patient Positioning Monitor	1	1	25

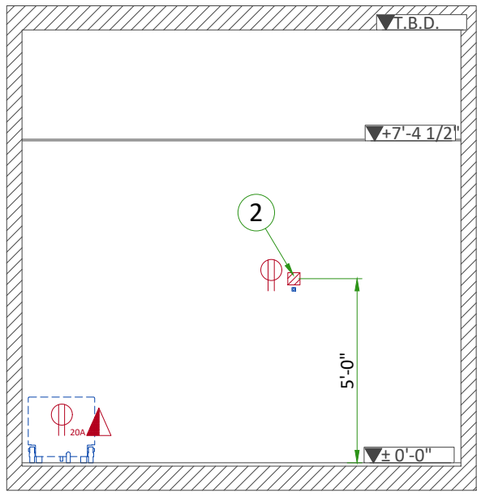

A

INTERCONNECTIONS

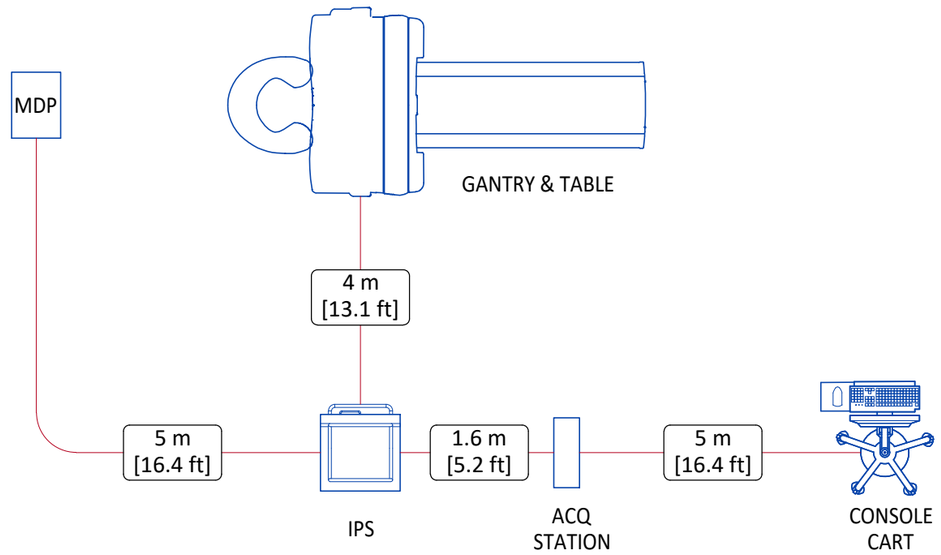

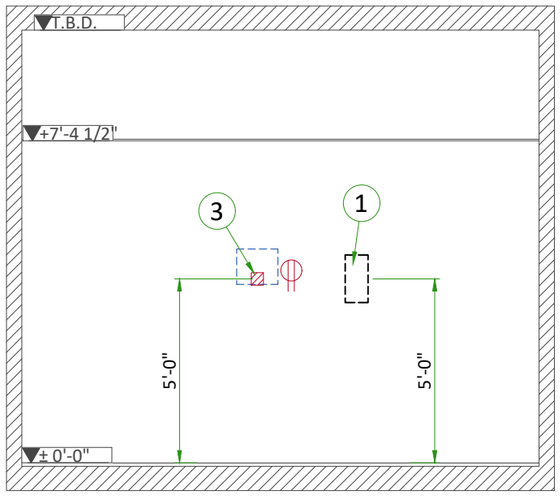

B

POWER REQUIREMENTS

POWER SUPPLY	**SINGLE PHASE+N+G 115/230 V +10% -5%**
FREQUENCIES	**50/60 Hz ± 1 Hz**
POWER RATINGS	**1.9 kVA**

- Line supply should come into a Main Disconnect Panel (MDP) containing the protective units and controls. The section of the supply cable should be calculated in accordance with its length and the maximum permissible voltage drops.
- There must be discrimination between supply cable protective material at the beginning of the installation (main low-voltage transformer side) and the protective devices in the MDP.

SUPPLY CHARACTERISTICS

- Power input must be separate from any others which may generate transients (elevators, air conditioning, radiology rooms equipped with high speed film changers ...)
- All equipment (lighting, power outlets, etc...) installed with GE system components must be powered separately.
- Transients must be less than 1200 V peak (on a 230 V line). A record of power input disturbances over a continuous one-week period (prior to delivery) enables determination of the frequency and degree of these disturbances and can be used to ascertain the need to provide line conditioning equipment.

GROUND SYSTEM

- Equipotential: The equipotential link will be by means of an equipotential bar. This equipotential bar should be connected to the protective earth conductors in the ducts of the non GE cableways and to additional equipotential connections linking up all the conducting units in the rooms where GE system units are located.

CABLES

- Power and cable installation must comply with the distribution diagram below.
- All cables must be isolated and flexible, cable color codes must comply with standardsfor electrical installation.
- The cables from signaling and remote control (Y, SEO, L ...) will go to MDP with a pigtail length of 1.5 m, and will be connected during installation. Each conductor will be identified and isolated (screw connector).

CABLEWAYS

The general rules for laying cableways should meet the conditions laid down in current standards and regulations, with regard to :

- Protecting cables against water (cableways should be waterproof)
- Protecting cables against abnormal temperatures (proximity to heating pipes or ducts)
- Protecting cables against temperature shocks
- Replacing cables (cableways should be large enough for cables to be replaced)
- Metal cableways should be grounded

FEEDER TABLE								
MIN. FEEDER WIRE SIZE, AWG OR MCM (mm²)/VAC	MINIMUM FEEDER WIRE LENGTH - ft (m)							
	50 (15)	100 (30.5)	150 (46)	200 (61)	250 (76)			
115 VAC	10 (6)	8 (8)	6 (17)	4 (26)	3 (34)			
230 VAC	12 (3)	12 (3)	12 (3)	10 (6)	10 (6)			
GENERAL NOTES								
In all cases qualified personnel must verify that the feeder (at the point of take-off) and the run to the GE system meet all the requirements stated in the PIM								
Grounding conductor will run from the equipment back to the power source/main grounding point and always travel in the same conduit with the feeders								

POWER DISTRIBUTION

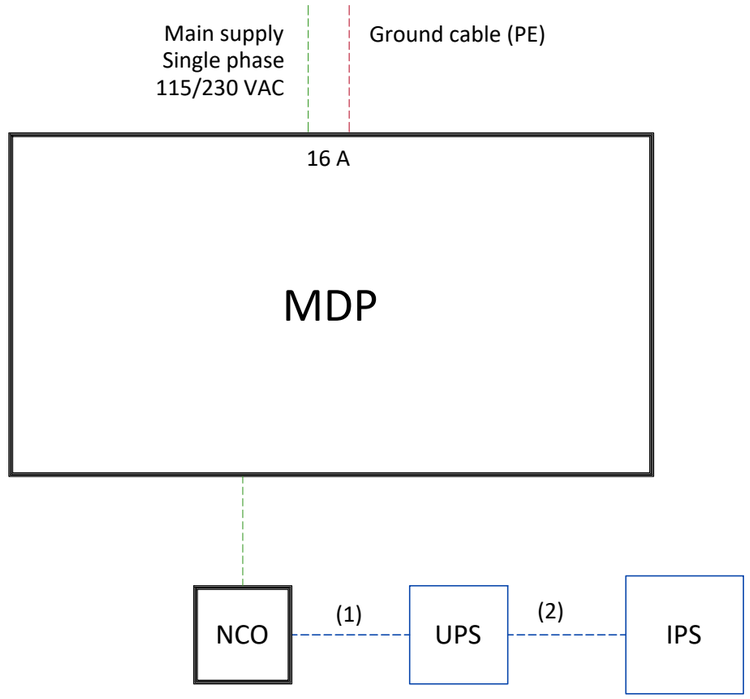

IPS	Integrated Power Supply
MDP	Main Disconnect Panel
NCO	Camera Outlet
UPS	UPS Cabinet

Notes :

(1) Cable with a usable length of 1.52m [5 ft] is delivered with the system.

(2) Cable with a usable length of 5m [16.4 ft] is delivered with the system.

- Cable SUPPLIED BY CUSTOMER
- Cable SUPPLIED BY GE
- Equipment SUPPLIED BY CUSTOMER
- Equipment SUPPLIED BY GE