REV	DATE	MODIFICATIONS
A	23/Jul/2018	First issue drawing / Final study based on MRI-

Typical

---

01 - C1 - Cover Sheet
02 - C2 - Disclaimer - Site Readiness
03 - A1 - General Notes
04 - A2 - Equipment Layout
05 - A3 - Section Views
06 - A4 - Acoustic - Proximity Limits
07 - A5 - RF shielding
08 - A6 - Equipment Details (1)
09 - A7 - Equipment Details (2)
10 - A8 - Delivery
11 - S1 - Structural Notes
12 - S2 - Structural Layout
13 - S3 - Structural Details
14 - M1 - Mechanical Layout
15 - M2 - HVAC-Venting
16 - M3 - Chilled Water
17 - M4 - Cryogenics (1)
18 - M5 - Cryogenics (2)
19 - E1 - Electrical Notes
20 - E2 - Electrical Layout
21 - E3 - Electrical Elevations
22 - E4 - Electrical Details
23 - E5 - Power Requirements
24 - E6 - Power Requirements (2)
25 - E7 - Interconnections

A mandatory component of this drawing set is the GE Healthcare Pre Installation manual. Failure to reference the Pre Installation manual will result in incomplete documentation required for site design and preparation.
Pre Installation documents for GE Healthcare products can be accessed on the web at: www.gehealthcare.com/siteplanning

GE does not take responsibility for any damages resulting from changes on drawings made by others. Errors may occur by not referring to the complete set of final issue drawing. GE cannot accept responsibility for any damage due to the partial use of GE final issue drawings, however caused. All dimensions are in millimeters unless otherwise specified. Do not scale from printed pdf files. GE accepts no responsibility or liability for defective work due to scaling from these drawings.

GE Healthcare

SIGNA PREMIER/XT/XTC
FINAL STUDY

Drawn by	Verified by	Concession	S.O. (GON)	PIM Manual	Rev
PMM	PMM	-	----	5815067	6

Format	Scale	File Name	Date	Sheet
A3	1/4"=1'-0"	EN-MRI-TYP-SIGNA_PREMIER-WEB.DWG	20/Oct/2021	01/25

DISCLAIMER

GENERAL SPECIFICATIONS

- GE is not responsible for the installation of developers and associated equipment, lighting, cassette trays and protective screens or derivatives not mentioned in the order.
- The final study contains recommendations for the location of GE equipment and associated devices, electrical wiring and room arrangements. When preparing the study, every effort has been made to consider every aspect of the actual equipment expected to be installed.
- The layout of the equipment offered by GE, the dimensions given for the premises, the details provided for the pre-installation work and electrical power supply are given according to the information noted during on-site study and the wishes expressed by the customer.
- The room dimensions used to create the equipment layout may originate from a previous layout and may not be accurate as they may not have been verified on site. GE cannot take any responsibility for errors due to lack of information.
- Dimensions apply to finished surfaces of the room.
- Actual configuration may differ from options presented in some typical views or tables.
- If this set of final drawings has been approved by the customer, any subsequent modification of the site must be subject to further investigation by GE about the feasibility of installing the equipment. Any reservations must be noted.
- The equipment layout indicates the placement and interconnection of the indicated equipment components. There may be local requirements that could impact the placement of these components. It remains the customer's responsibility to ensure that the site and final equipment placement complies with all applicable local requirements.
- All work required to install GE equipment must be carried out in compliance with the building regulations and the safety standards of legal force in the country concerned.
- These drawings are not to be used for actual construction purposes. The company cannot take responsibility for any damage resulting therefrom.

CUSTOMER RESPONSIBILITIES

- It is the responsibility of the customer to prepare the site in accordance with the specifications stated in the final study. A detailed site readiness checklist is provided by GE. It is the responsibility of the customer to ensure all requirements are fulfilled and that the site conforms to all specifications defined in the checklist and final study. The GE Project Manager of Installation (PMI) will work in cooperation with the customer to follow up and ensure that actions in the checklist are complete, and if necessary, will aid in the rescheduling of the delivery and installation date.
- Prior to installation, a structrual engineer of record must ensure that the floor and ceiling is designed in such a way that the loads of the installed system can be securely borne and transferred. The layout of additional structural elements, dimensioning and the selection of appropriate installation methods are the sole responsibility of the structural engineer. Execution of load bearing structures supporting equipment on the ceiling, floor or walls are the customer's responsibility.

THE UNDERSIGNED, HEREBY CERTIFIES THAT I HAVE READ AND APPROVED THE PLANS IN THIS DOCUMENT.		
DATE	NAME	SIGNATURE

GLOBAL SITE READINESS CHECKLIST (DI)

DOC1809666 Rev. 7

Site Ready Checks at Installation
EHS Site Requirements
Overall access route to the scan room free from obstruction / high hazards.
Enough space to store tools, equipment, parts, install waste and the general area free from obstruction and trip hazards.
Enough necessary facilities for the GE employees available.
No 3rd parties working in the area that may affect the safety of the installation activity.
Area free from any chemical, gas, dust, welding fume exposure and has painting been completed and dry.
All emergency routes identified, signed and clear from obstruction.
Accessible single source lockable panel that LOTO can be applied to for GE equipment installation (MDP and/or PDU).
There are no other conditions or hazards that you have observed or have been made aware of by the customer or contractors on site.
Site Ready Checks for MR Magnet delivery if separate from system
Specific for MR Magnet Delivery
All permits, plans and permissions received for rigging and/or delivery.
Adequate delivery route from truck to final place of installation has been reviewed with all stakeholders, all communications/notifications have occurred, arrangements have been made for special handling (rigging, elevator, fork lift, etc.)
All floors along delivery route will support weight of the equipment, temporary reinforcements arranged if needed.
Chilled water supply for Water Cooled Compressor or Air Cooled Compressor is ready and meets GE specifications.
Water drain available in the equipment room, if applicable.
Power for MR compressor & Chiller is available.
Power is available for magnet monitoring.
Connectivity is available for magnet monitoring.
Ensure cryogen venting system is complete to outside the building & available for magnet connection.
Exhaust fan system is installed per GE requirements and VERIFIED operational by suction at intake.
Required for Mechanical Install start
Room dimensions, including ceiling height, for all Exam, Equipment/Technical & Control rooms meets GE specifications.
Ceiling support structure, if indicated on the GE drawing, is in the correct location and at the correct height according to the Original Equipment Manufacturer specifications.
Levelness and spacing has been measured, and is ready for the installation of any GE supplied components.
Finished ceiling is installed. If applicable ceiling tiles installed per PMI discretion.
Floor levelness/flatness is measured and within tolerance, and there are no visible defects per GEHC specifications.
Entry door threshold meets PIM requirement
Floor Strength and thickness have been discussed with customer/contractor and they have confirmed GE requirements are met.
Rooms that will contain equipment, including staging areas if applicable, are construction debris free. Precautions must be taken to prevent debris from entering rooms containing equipment.
Cable ways (floor/wall/ceiling/Access Flooring) are available for installation of GE cables are of correct length and diameter.
Overhead cable trays must be install exactly as shown in GE supplied installation drainges to assure proper Gradient Cable length.
Cable ways routes per GE Final drawings and cable access openings areas installed at a time determined by GEHC PM. Surface floor duct can be installed at time of system installation.
Adequate room illumination installed and working.
Customer supplied countertops where GE equipment will be installed are in place.
RF Shield installed with possible exception of magnet entrance. RF Shield Effectivity and Ground Isolation Test needed. If GE responsible for supplying RF shield, the RF shield Effectivity and Ground Isolation Test data is a Mandatory attachment into MyProjects.
Required for Calibration start
HVAC systems Installed, and the site meets minimum environmental operational system requirements.
System power & grounding (PDB/MDP) is available as per GE specifications.
System power & grounding (PDB/MDP) is installed at point of final connection and ready to use. Lock Out Tag Out is available.
PMI to confirm all feeder wires and breaker are size appropriately. EPO installed if needed.
PMI to confirm with electrician all power and signal cables are well terminated ensuring there are no loose connections.
Network outlets installed.
Computer network available and working.

Note: The details shown here are only an extract from DOC1809666. For the complete document please contact your PMI.

CUSTOMER SITE READINESS REQUIREMENTS

- Any deviation from these drawings must be communicated in writing to and reviewed by your local GE healthcare installation project manager prior to making changes.
- Make arrangements for any rigging, special handling, or facility modifications that must be made to deliver the equipment to the installation site. If desired, your local GE healthcare installation project manager can supply a reference list of rigging contractors.
- New construction requires the following;
  1. Secure area for equipment,
  2. Power for drills and other test equipment,
  3. Capability for image analysis,
  4. Restrooms.
- Provide for refuse removal and disposal (e.g. crates, cartons, packing)
- For CT, MR, PET/CT, and SPECT systems it is required to minimize vibrations within the scan room. It is the customer's responsibility to contract a vibration consultant/engineer to implement site design modifications to meet the GE vibration specification. Refer to the system preinstallation manual for vibration specifications.

MRI SITE PLANNING REMINDERS

Please refer to pre-installation checklist in pre-installation manual listed on the cover sheet for items critical to image quality.

1. The layout should be arranged so that the 5g line is contained to the magnet room. If not possible, a barrier is recommended to prevent entry to the 5g field area.
2. The spaces around, above, and below the magnet must be reviewed for effects of the 5g, 3g, 1g, and .5g fields. Refer to the proximity limit chart in the MR pre-installation manual referenced on the cover sheet.
3. For moving metal, the restriction lines typically extend outside of the MR space. Please confirm there are no moving metal concerns within these areas.
4. For vibration, analysis to be completed as required per pre-installation manual.
5. For EMI, review the site for the location of the main electrical feeders, AC devices, or distribution systems. An EMI study is recommended if large AC systems are nearby.
6. Details of the floor below the magnet must be reviewed. The structural engineer must verify that the quantity of steel in the volume 10ft [3.1m] x 10ft [3.1m] x 1ft [.3m] deep (below the magnet) does not exceed the allowable steel content as given in the MR pre-installation manual referenced on the cover sheet.
7. Remove, cover, or fill-in abandoned ducts or troughs from the Equipment and Magnet rooms. Access/computer room flooring in the Equipment room can either be removed or assessed and reinforced to support heavier cabinets.

Responsibility for the coordination, design, engineering, and site preparation resides with the customer and their project architects and contractors. GE does not, by providing reviews and furnishing comments and assistance, accept any responsibility beyond its obligations as defined in the MR system, sale/purchase agreement.

IMAGE QUALITY CONSIDERATIONS

Broadband RF noise is a single transient or continuous series of transient disturbances caused by an electrical discharge. Low humidity environmental conditions will have higher probability of electrical discharge. The electrical discharge can occur due to electrical arcing (micro arcing) or merely static discharge. Some potential sources capable of producing electrical discharge include:

- Loose hardware/fasteners vibration or movement (electrical contunuity must always be maintained)
- Flooring material including raised access flooring (panels & support hardware) and carpeting
- Electrical fixtures (i.e. Lighting fixtures, track lighting, emergency lighting, battery chargers, outlets)
- Ducting for HVAC and cable routing
- RF shield seals (walls, doors, windows etc.)

For additional information regarding image quality, refer to the pre-installation manual listed on the cover sheet.

MAGNETIC INTERFERENCE SPECIFICATIONS

- The customer must establish protocols to prevent persons with cardiac pacemakers, neurostimulators, and biostimulation devices from entering magnetic fields of greater than 5 gauss (exclustion zone).
- Main power transformers must remain outside the 3 gauss field.
- Potential exists under fault conditions that the 5 gauss line may expand radially to 14.8 ft. [4.5 m] and axially to 19.7 ft. [6.0 m] for 8 seconds or less. It should be noted that normal rampdowns or magnet rundown unit initiated quenches will not cause the magnetic field to expand.
- It is recommended every site consider the event of a quench and plan accordingly (such as placing 5 gauss warning signs at expanded locations).
- The ferrous metal objects listed below must not move into or inside of the moving metal sensitivity line during scans.

TYPCIAL MOVING MAGNETIC MASS	DISTANCE RADIALLY		DISTANCE AXIALLY	
Carts, Gurneys 100-400 lbs [45-182 kg]	3 Gauss line		3 Gauss line	
Forklifts, small elevator, cars, minivans vans, pickup trucks, ambulances (objects greater than 400 lbs [182 kg])	20.0 FT	6.05 M	25.0 FT	7.65 M
Buses and trucks (dump, tractor trailer, utility, fire trucks)	23.2 FT	7.10 M	29.2 FT	8.90 M
For objects >400 lbs [182 kg], Z-axis EMI disturbances must not exceed 5.6 mG peak-to-peak.				

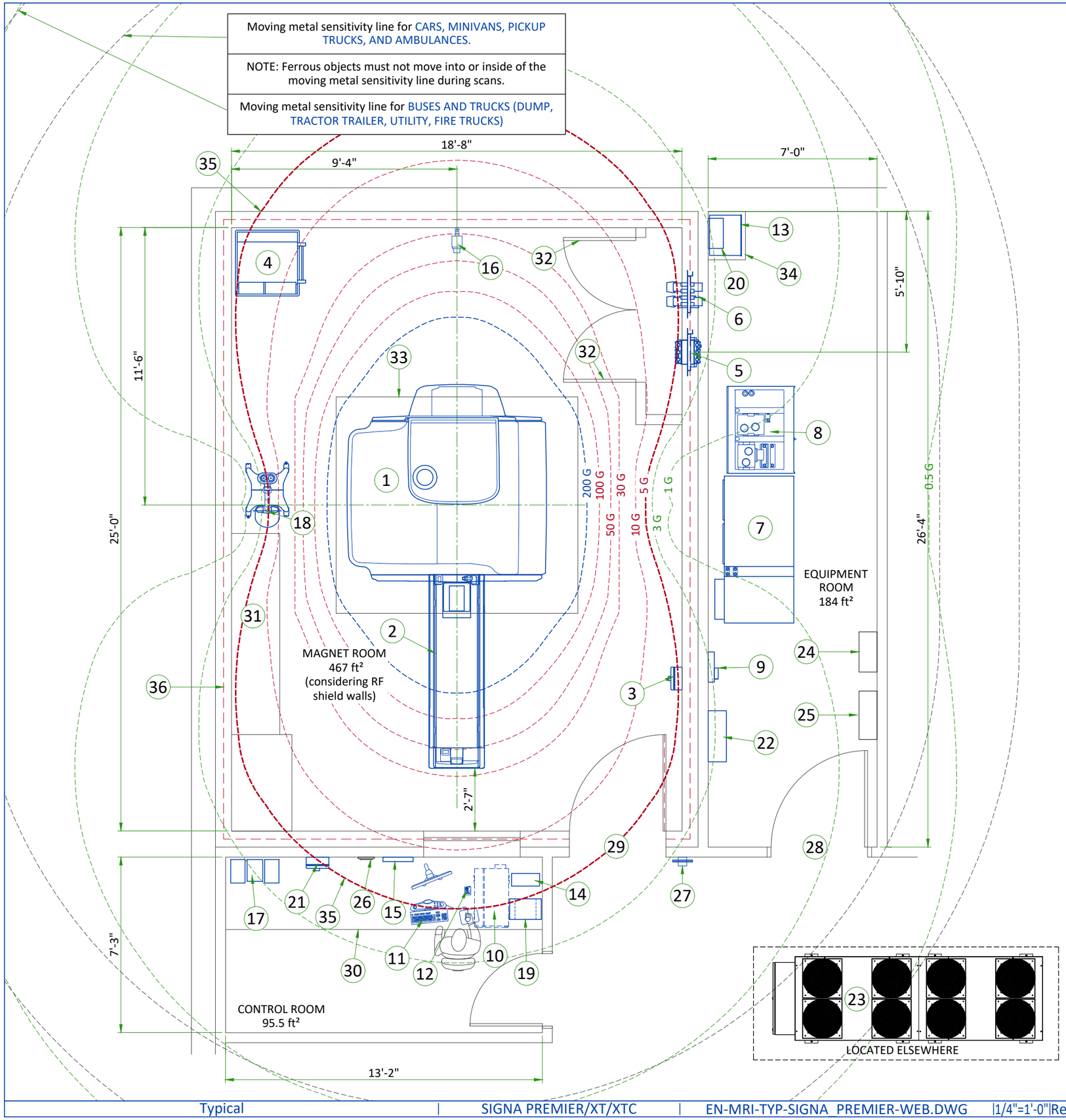

LEGEND			
A	GE Supplied	D	Available from GE
B	GE Supplied/contractor installed	E	Equipment existing in room
C	Customer/contractor supplied and installed	*	Item to be reinstalled from another site
	200 Gauss		5 Gauss
	100, 50, 30, 10 Gauss		3, 1, 0.5 Gauss

BY	ITEM	DESCRIPTION	MAX HEAT OUTPUT (btu)	WEIGHT (lbs)	MAX HEAT OUTPUT (W)	WEIGHT (kg)
A	1	3T Magnet	10060	16790	2950	7816
A	2	Patient table - fixed	-	418	-	190
A	3	Magnet rundown unit	-	7	-	3.2
A	4	Phantom set storage cabinet	-	350	-	136
A	5	Integrated Systems Penetration Panel	-	-	-	-
A	6	Integrated Cooling Penetration Panel	1023	-	300	-
A	7	Integrated Systems Cabinet	39215	4699	11500	2136
A	8	Integrated Cooling Cabinet	3410	1353	1000	615
A	9	Magnet monitor	819	10	240	4.5
A	10	Operator console computer	4947	122.8	1450	55.7
A	11	Operator workspace	-	26	-	11.80
A	12	Pneumatic patient alert	-	0.5	-	0.2
A	13	MR Elastography	480	53.4	141	24.22
A	14	700 va partial UPS	-	26.5	-	11.5
A	15	CCTV Monitor	-	7.7	-	3.50
D	16	CCTV Camera	-	0.3	-	0.14
D	17	Music system	-	-	-	-
D	18	Injector on pedestal	-	94	-	43
D	19	Injector control	675	17	198	8
D	20	Injector power supply	660	6	193	3
D	21	Remote magnet rundown unit	-	7	-	3.20
B/D	22	Main disconnect panel	901	190	264	86.4
D	23	Dimplex chiller W02-2-10000	297000	4800	87000	2177
D	24	Water bypass	-	-	-	-
D	25	Water filter	-	-	-	-
D	26	Remote graphic display	-	-	-	-
B/D	27	Metal Detector (hand held)	-	-	-	-
C	28	Minimum opening for equipment delivery is 40 in. w x 82 in. h, contingent on a 72 in. corridor width				
C	29	Minimum opening for equipment delivery 43 in. w x 82 in. h, contingent on a 96 in. corridor width				
C	30	Counter top for equipment- provide grommeted openings as required to route cables				
C	31	Base cabinet for storage of: surface coils, patient positioning pads, phantoms, etc.				
C	32	Louvered doors - refer to preinstall for requirements				
C	33	Magnet access 9'-0"x10'-0"				
C	34	Shelf				
C	35	Warning! 5 Gauss line outside the Magnet room limits				
C	36	Define RF shield's inset according to provisions made by the RF Shield vendor				
		RF SHIELD - 100 dB ATTENUATION				

Exam room height	
Finished floor to slab height	TBD
Recommended finished ceiling height	8'-9"

For Accessory Sales: (866) 281-7545 Options 1, 2, 1, 2 or mail to: gehcaccessorysales@ge.com

SIDE VIEW WITH MAGNETIC FIELD

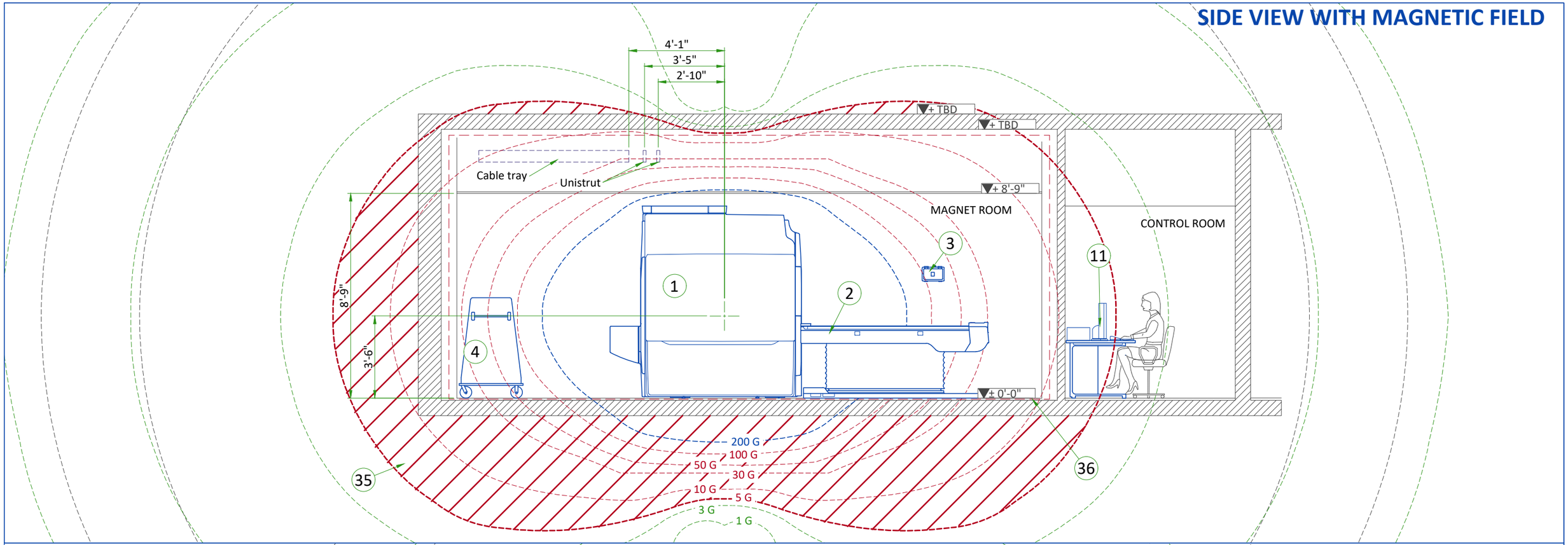

FRONT VIEW WITH MAGNETIC FIELD

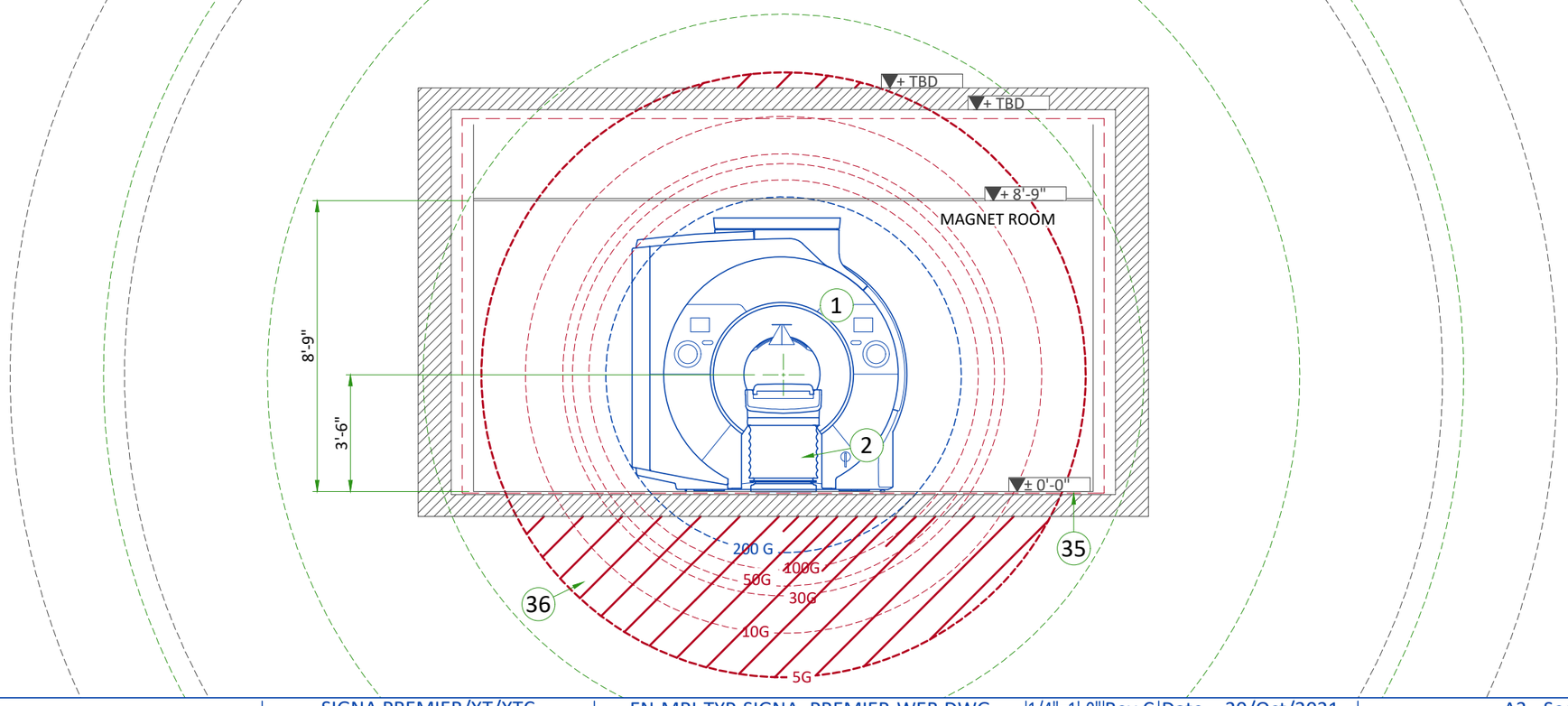

ACOUSTIC SPECIFICATIONS

	GE Equipment Acoustic Output	Notes
Control Room	62 dBA	
Equipment Room	83.6 dBA	The 83.6 dBA level is for GE equipment only. The Equipment room acoustic level must not exceed 85 dBA
Magnet Bore Isocenter	127 dBA	See Sound Pressure Spectral Distribution Detail
Front of Magnet - 800mm from bore measurement	124 dBA	

ISOGAUSS PLOTS

* The isogauss contour plots depicted on this drawing represent magnetic fringe fields resulting from the normal operation of the magnet provided with the MR system. The actual magnetic field intensity at any point in the vicinity of the magnet when installed may vary from the contour plots due to factors such as the concentrating effects of nearby ferrous objects ambient magnetic fields, including the earth's magnetic field. Therefore, the contours shown are only approximations of actual field intensities found at a corresponding distance from the magnet's isocenter.

SOUND PRESSURE SPECTRAL DISTRIBUTION

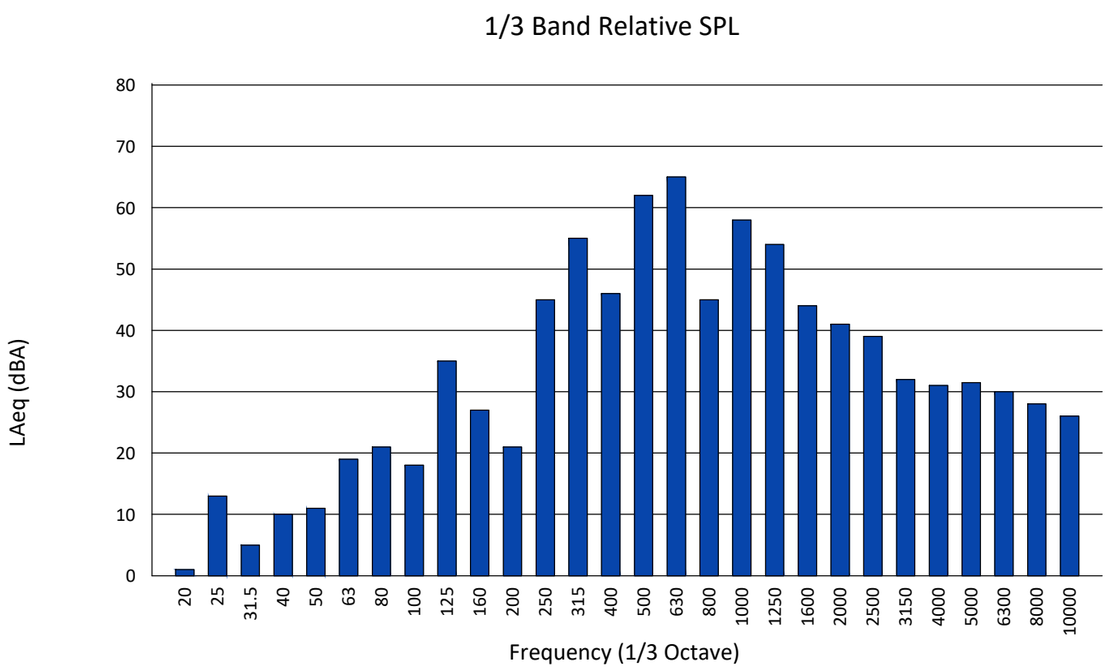

MAGNETIC PROXIMITY LIMITS

Gauss (mT) Limit	Equipment
0.5 gauss (0.05mT)	Nuclear camera
1 gauss (0.1mT)	Positron Emission Tomography scanner, Linear Accelerator, Cyclotrons, Accurate measuring scale, Image intensifiers, Bone Densitometers, Video display (tube), CT scanner, Ultrasound, Lithotriptor, Electron microscope, Digital X-Ray
3 gauss (0.3mT)	Power transformers, Main electrical distribution transformers
5 gauss (0.5mT)	Cardiac pacemakers, Neurostimulators, Biostimulation devices
10 gauss (1mT)	Magnetic computer media, Line printers, Film processor, X-ray tubes, Emergency generators, Commercial laundry equipment, Food preparation area, Water cooling equipment, HVAC equipment, Major mechanical equipment room, Credit cards, watches, and clocks, Air conditioning equipment, Fuel storage tanks, Motors greater than 5 horsepower
50 gauss (5mT)	Metal detector for screening, LCD panels, Telephones
No Limit	Digital Detectors

The customer must provide detail defining ferrous material below the magnet to the Project Manager so the GE Healthcare MR Siting and Shielding team can review for compliance.

STEEL MASS LIMITS TO MAGNET ISOCENTER (3x3 m [10x10 ft] AREA UNDER MAGNET)

Limits Of Steel Mass		Distance From Magnet Isocenter		Distance Below Top Surface Of Floor	
kg/m²	lbs/ft²	mm	in	mm	in
0	0	0 - 1143	0-45	0 - 76	0-3
9.8	2	1143 - 1194	45-47	76 - 127	3-5
14.7	3	1194 - 1321	47-52	127 - 254	5-10
39.2	8	1321 - 1397	52-55	254 - 330	10-13
98.0	20	1397+	55+	330+	13+

The actual field strength can be affected by Magnetic shielding, Earth's magnetic field, other magnetic fields and stationary or moving metal. This information must be used to evaluate potential site interaction of GE Healthcare equipment with other non-GE Healthcare equipment. Magnetic shielding can be installed to prevent interaction between the magnet and nearby sensitive devices. The GE Healthcare Project Manager of Installation (PMI) can work with the customer to coordinate the magnetic shielding site evaluation. The customer is responsible for installation of all magnetic shielding.

PENETRATION PANEL WALL OPENINGS

Magnet room side

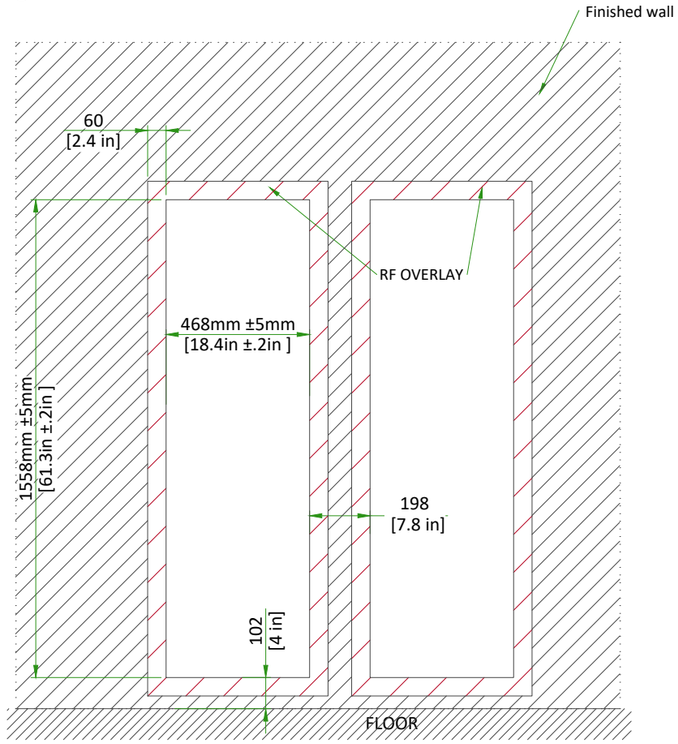

Penetration Panel
Adapter Plate

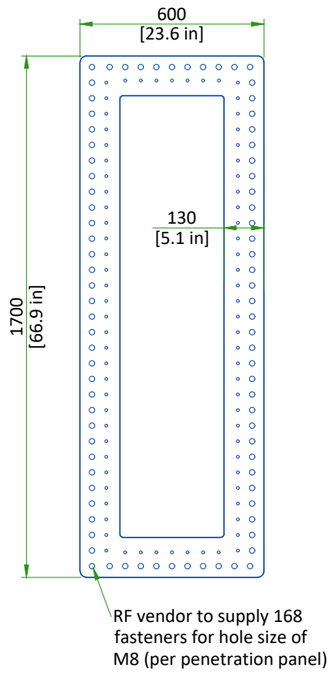

Equipment room

Magnet room

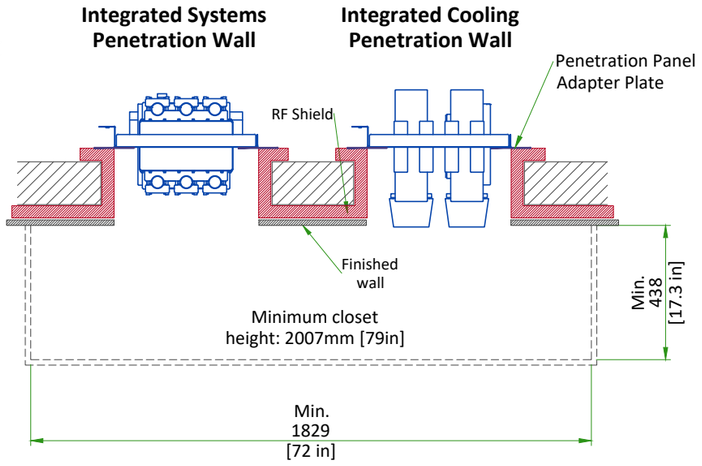

MINIMUM MAGNET CEILING HEIGHT (TOP VIEW)

Shaded area within solid lines indicates floor to ceiling height - Ideal height of Magnet room suspended ceiling is 2667mm [105 in]. Minimum Magnet room suspended ceiling height is 2500 mm [98.5 in].
If the suspended ceiling height is between 2500mm and 2667mm [98.5 in and 105 in] a low ceiling height kit may be required.

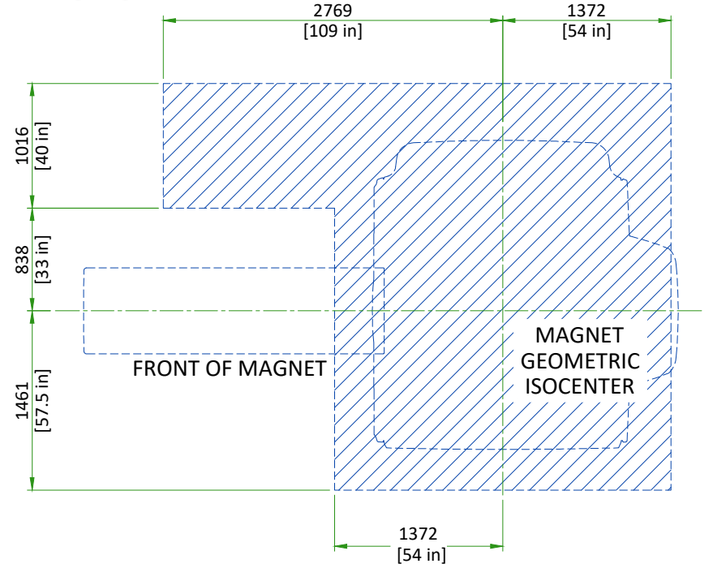

SCALE 1:50

MAGNET ENCLOSURE SIGNA PREMIER

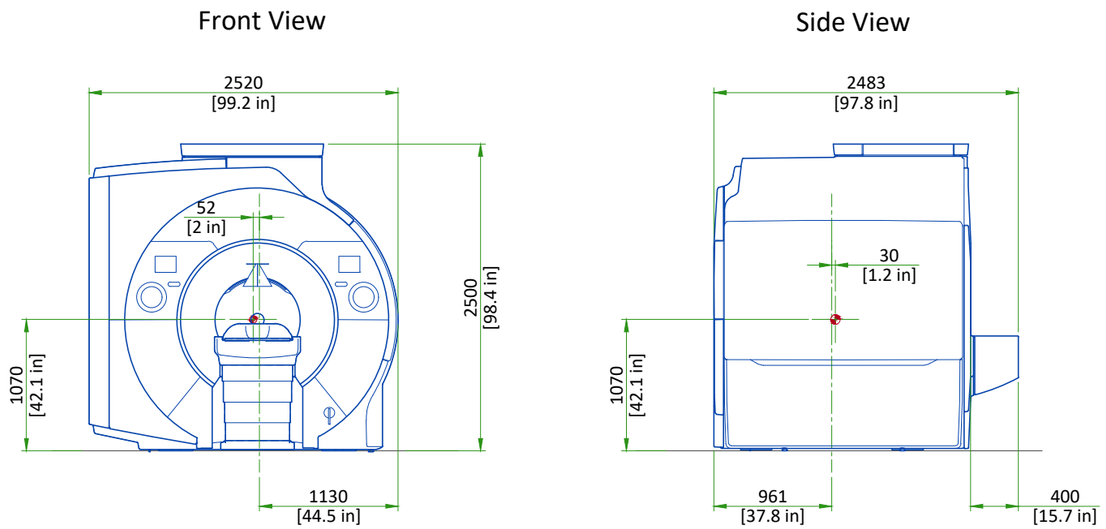

SCALE 1:50

Note:

Center of gravity is approximate and includes the GE Healthcare supplied VibroAcoustic Dampening Kit, but does not include cryogens, gradient assembly, side mounted electronics, or enclosures.

Center of gravity

PATIENT TABLE

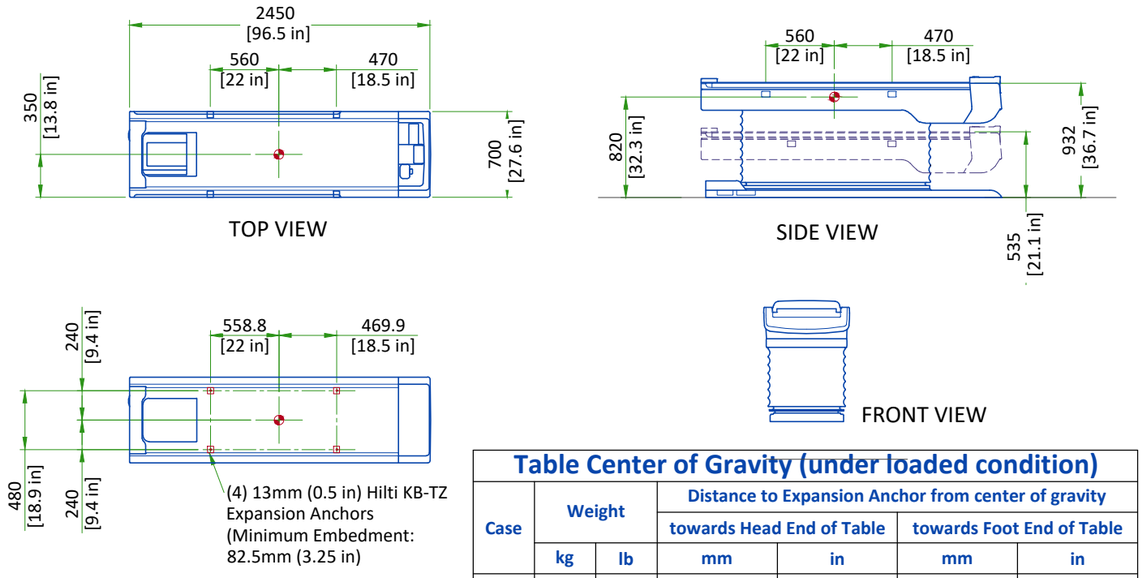

Table Center of Gravity (under loaded condition)						
Case	Weight		Distance to Expansion Anchor from center of gravity			
			towards Head End of Table		towards Foot End of Table	
	kg	lb	mm	in	mm	in
A	540	1191	610	24	419	16.5
B	400	882	175	6.9	853	33.6
C	540	1191	584	23	445	17.5

Center of gravity

SCALE 1:50

MAIN DISCONNECT PANEL

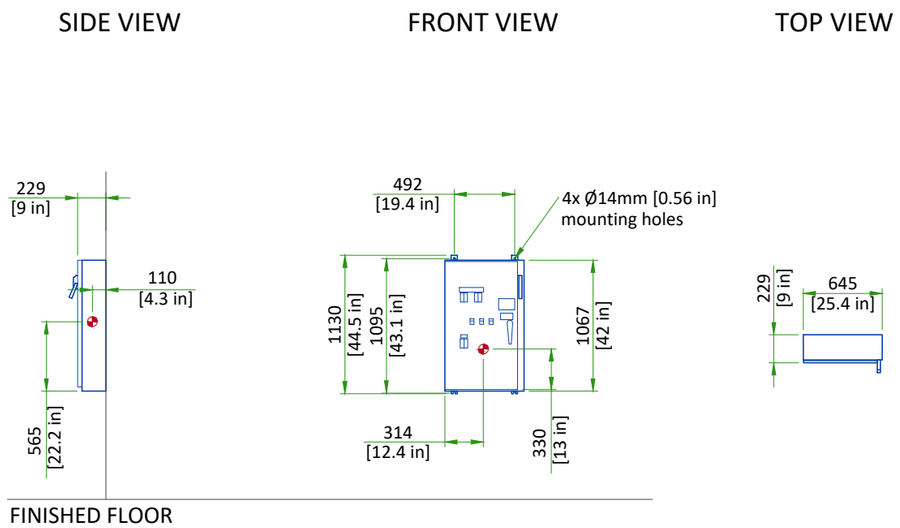

Center of gravity

NOT TO SCALE

GLOBAL OPERATOR CABINET (GOC)

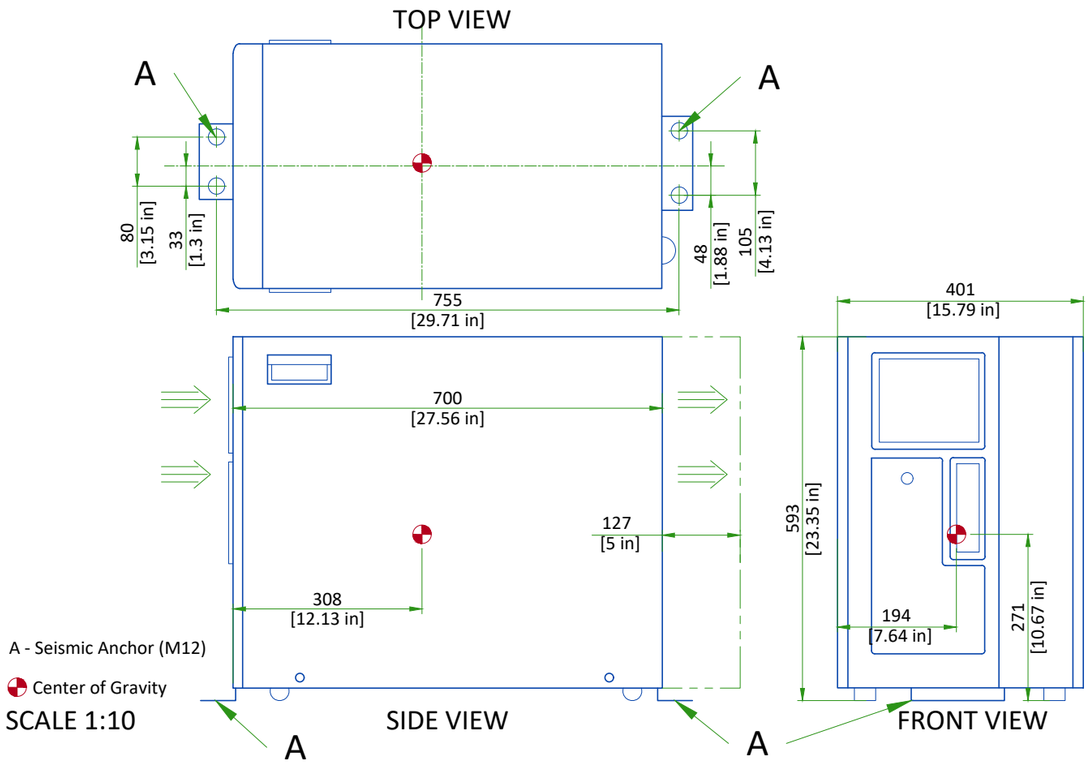

A - Seismic Anchor (M12)

Center of Gravity

SCALE 1:10

INTEGRATED SYSTEMS CABINET

SIDE VIEW FRONT VIEW TOP VIEW

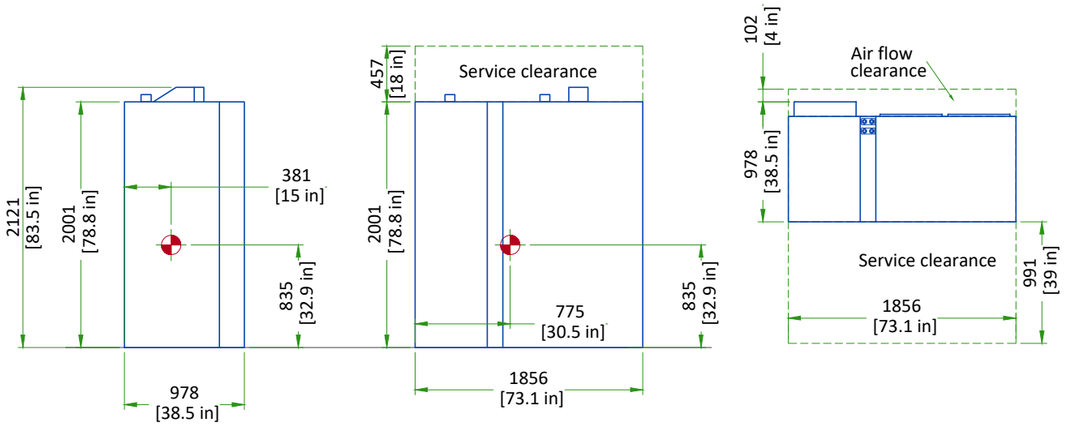

Center of gravity

NOT TO SCALE

INTEGRATED SYSTEMS CABINET PENETRATION WALL

SIDE VIEW FRONT VIEW TOP VIEW

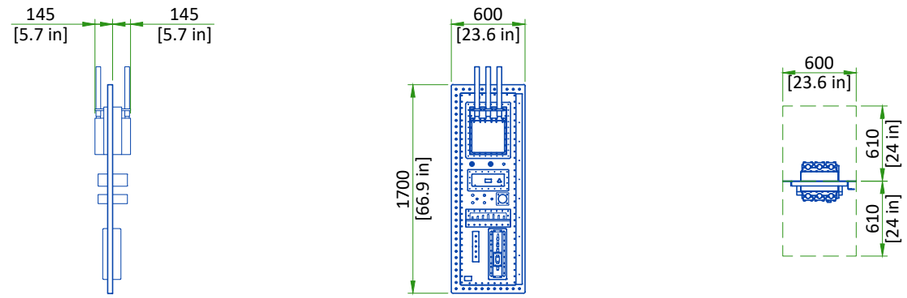

NOT TO SCALE

INTEGRATED COOLING CABINET

SIDE VIEW FRONT VIEW TOP VIEW

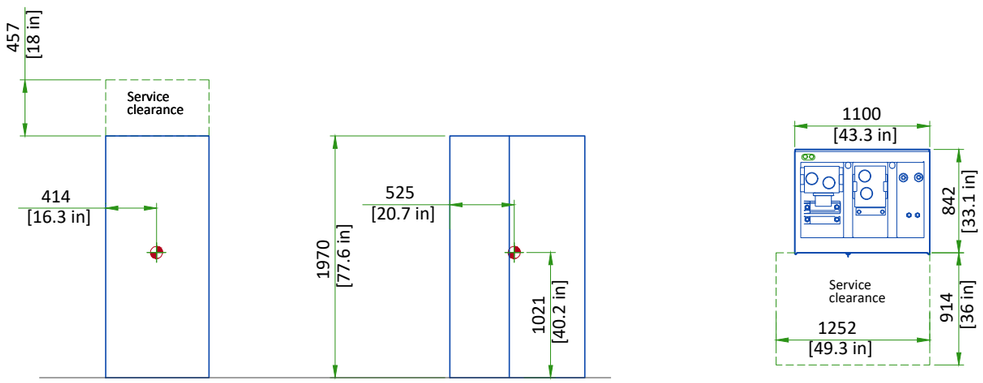

Center of gravity

NOT TO SCALE

INTEGRATED COOLING CABINET SECONDARY PENETRATION WALL

SIDE VIEW FRONT VIEW TOP VIEW

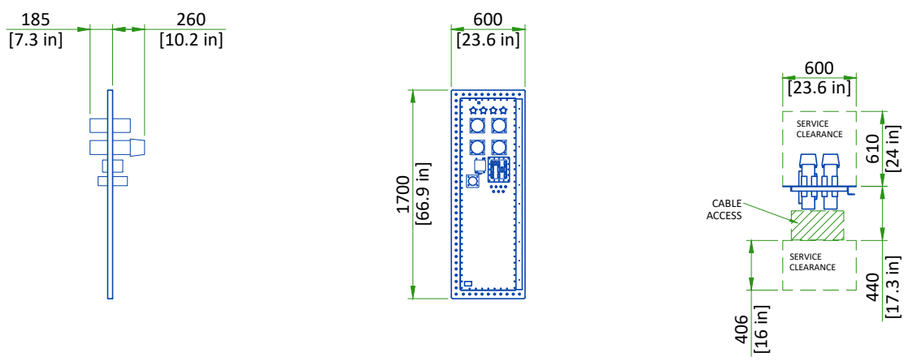

NOT TO SCALE

DELIVERY

ROUTING

- The customer is solely liable for routing of components from dock to final site.
- GE must be able to move system components in or out with no need to uncrate or disassemble any of the components. The entire passageway must be cleared, adequately lighted and free from dust.
- The floor and its surfacing must be able to withstand the live load of components and handling equipment.
- Floor surfacing must be continuous.
- The customer must protect any fragile flooring surfaces.

MINIMUM SPECIFICATIONS FOR MAGNET ROUTING

- Floor must be able to withstand a moving load of 7443 kg [16410 lb]
- Recommended opening height: 2.5m [98.5in], width: 2.5m [98.5in]. If recommended dimensions cannot be met refer to pre-installation manual for detailed specifications.
- Maximum slope: 30 degree

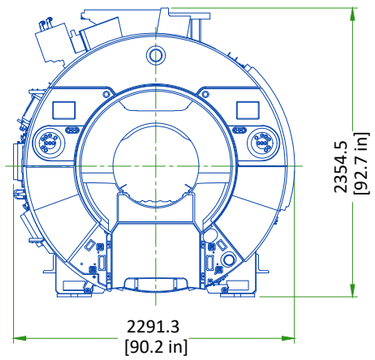

FRONT VIEW OF MAGNET

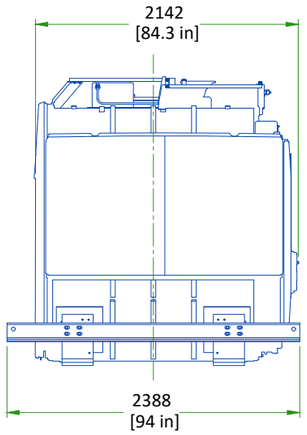

RIGHT SIDE VIEW OF MAGNET

STRAIGHT PATH
(Rigging wheels required)

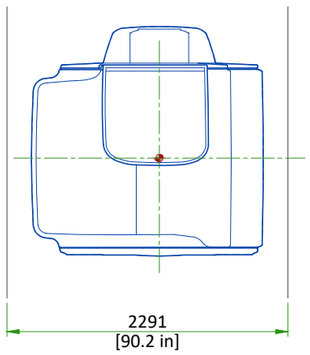

PATH WITH 90 DEGREE TURN

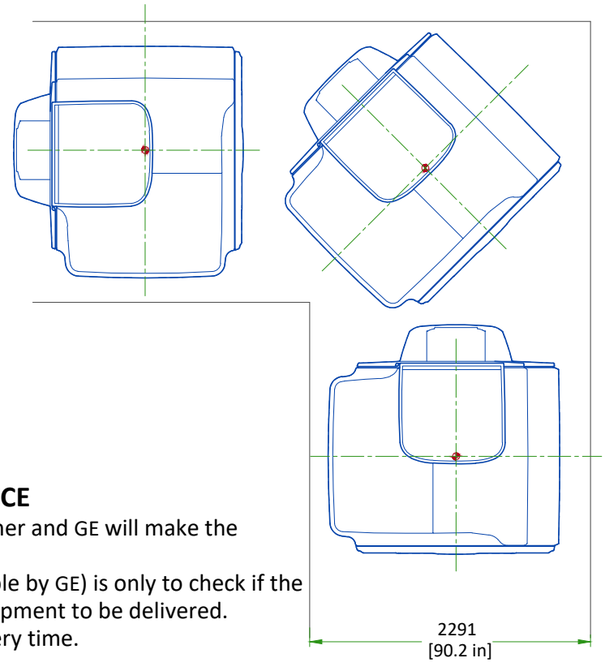

INSTALLATION AND DELIVERY ACCEPTANCE

- A survey of the site established by the customer and GE will make the decision for the delivery time.
- This survey of the site (a form is made available by GE) is only to check if the apparent conditions of the site allow the equipment to be delivered.
- If the site is not ready, GE can delay the delivery time.

CRITICAL ITEMS FOR MAGNET DELIVERY

- 24/7 chilled water and 480v power for shield/cryo cooler
- 24/7 120v power for the magnet monitor
- Phone lines for magnet monitoring and emergency use
- Magnet room exhaust fan
- Cryogen venting (if roof hatch, completed within 24 hrs)

This is only a partial list of items required for delivery of the magnet. For a complete checklist refer to the pre-installation manual referenced on cover sheet.

DIMENSIONS OF THE MAIN REPLACEMENT PARTS

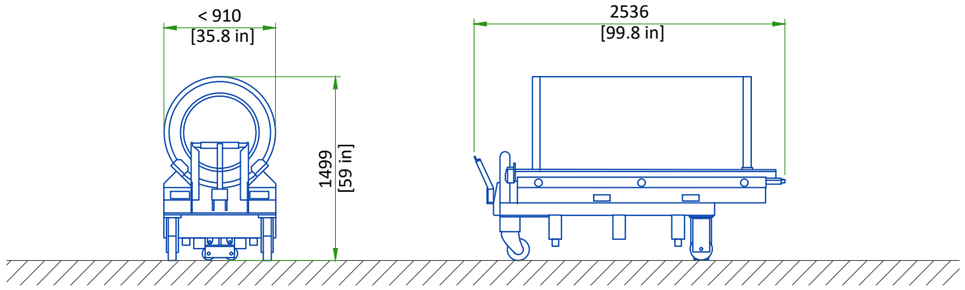

HEADER	DIMENSION LxWxH		WIEGHT		NOTE
	mm	in	kg	lbs	
Split Bridge	546x1963x178	21.5x77.3x7	18	40	
Gradient Cooling Unit	920x605x1445	36.2x23.8x56.9	144.5	318.6	
Cabinet Cooling Unit	920x705x1550	36.2x27.8x61	195.5	431	
Replacement RF Body Coil	873x896x1861	34.4x35.3x72.5	116	255	Replacement coil is shipped in a protective case. Weight & dimensions are for coil & case.
Replacement HRMw gradient coil assembly on a shipping cradle/cart	991x2536x1499	39x99.84x59	1449	3194	Initial gradient coil assembly is shipped installed in the magnet. Shipping/installation cart is used to install re-placement coil assembly only.
Gradient Coil Replacement Tool Kit Crate	762x2184x711	30x86x28	340	750	Gradient Coil Assembly and shipping cart dimensions are with cart in lowest position. Cart can be adjusted to maximum height of 61.88 in. (1572 mm).

The weight bearing structure of the site should support any additional weight of the main replacement parts occurring during maintenance of the magnet, throughout the whole lifecycle of the MR.

STRUCTURAL NOTES

- All units that are wall mounted or wall supported are to be provided with supports where necessary. Wall supports are to be supplied and installed by the customer or his contractors.
- Dimensions are to finished surfaces of room.
- Certain MR procedures require an extremely stable environment to achieve high resolution image quality. Vibration is known to introduce field instabilities into the imaging system. The vibration effects on image quality can be minimized during the initial site planning of the mr suite by minimizing the vibration environment. See PROXIMITY LIMITS, PATIENT TABLE DOCK ANCHOR MOUNTING REQUIREMENTS AND VIBROACOUSTIC DAMPENING KIT details for additional information.
- Standard steel studs, nails, screws, conduit, piping, drains and other hardware are acceptable if properly secured. Any loose steel objects can be violently accelerated into the bore of the magnet. Careful thought should be given to the selection of light fixtures, cabinets, wall decorations, etc. To minimize this potential hazard. For safety, all removable items within the magnet room such as faucet handles, drain covers, switch box cover plates, light fixture components, mounting screws, etc. must be non-magnetic. If you have a specific question about material, bring it to the attention of your GE project manager of installations.
- Floor levelness refer to MAGNET ROOM FLOOR SPECIFICATIONS DETAIL, this floor levelness requirement is important for accurate patient table docking.
- Non-movable steel such as wall studs or hvac components will produce negligible effect on the active shield magnet.
- Customers contractor must provide all penetrations in post tension floors.
- Customers contractor must provide and install any non-standard anchoring. Documents for standard anchoring methods are included with GE equipment drawings for geographic areas that require such documentation.
- Customers contractor must provide and install hardware for "through the floor" anchoring and/or any bracing under access floors. This contractor must also provide floor drilling that cannot be completed because of an obstruction encountered while drilling by the GE installer such as rebar etc.
- Customers contractor to provide and install appropriate supports for the storage of excess cables.
- It is the customer's responsibility to perform any floor or wall penetrations that may be required. The customer is also responsible for ensuring that no subsurface utilities (e.g., electrical or any other form of wiring, conduits, piping, duct work or structural supports (i.e. post tension cables or rebar)) will interfere or come in contact with subsurface penetration operations (e.g. drilling and installation of anchors/screws) performed during the installation process. To ensure worker safety, GE installers will perform surface penetration operations only after the customer's validation and completion of the "GE surface penetration permit"

VIBRATION SPECIFICATIONS

Excessive vibration can affect MR image quality. Vibration testing must be performed early in the site planning process to ensure vibration is minimized. Both steady state vibration (exhaust fans, air conditioners, pumps, etc.) and transient vibrations (traffic, pedestrians, door slamming, etc.) must be assessed.

- The Magnet cannot be directly isolated from vibration. Any vibration issue must be resolved at the source.

Transient vibration levels above the specified limits in the MR Site Vibration Test Guidelines must be analyzed. Any transient vibration that causes vibration to exceed the steady-state level must be mitigated.

NOTE:
The customer may have to hire a vibration consultant based on the results of the analysis.

MAGNET STEADY-STATE VIBRATION SPECIFICATIONS

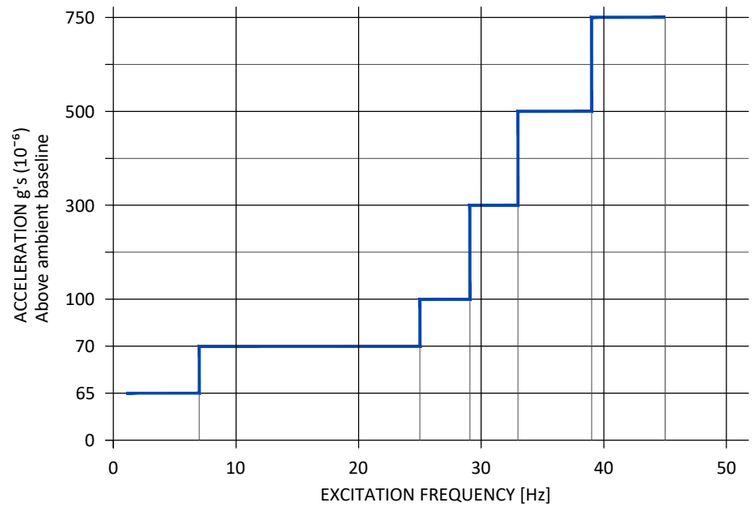

VIBRATION TRANSMITTED THROUGH VIBROACOUSTIC MAT

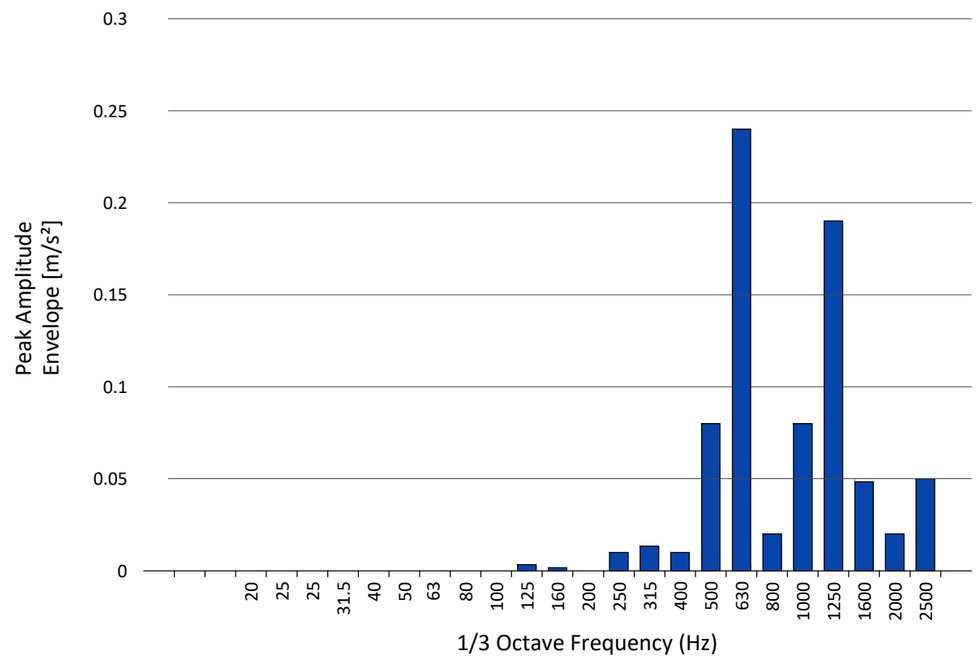

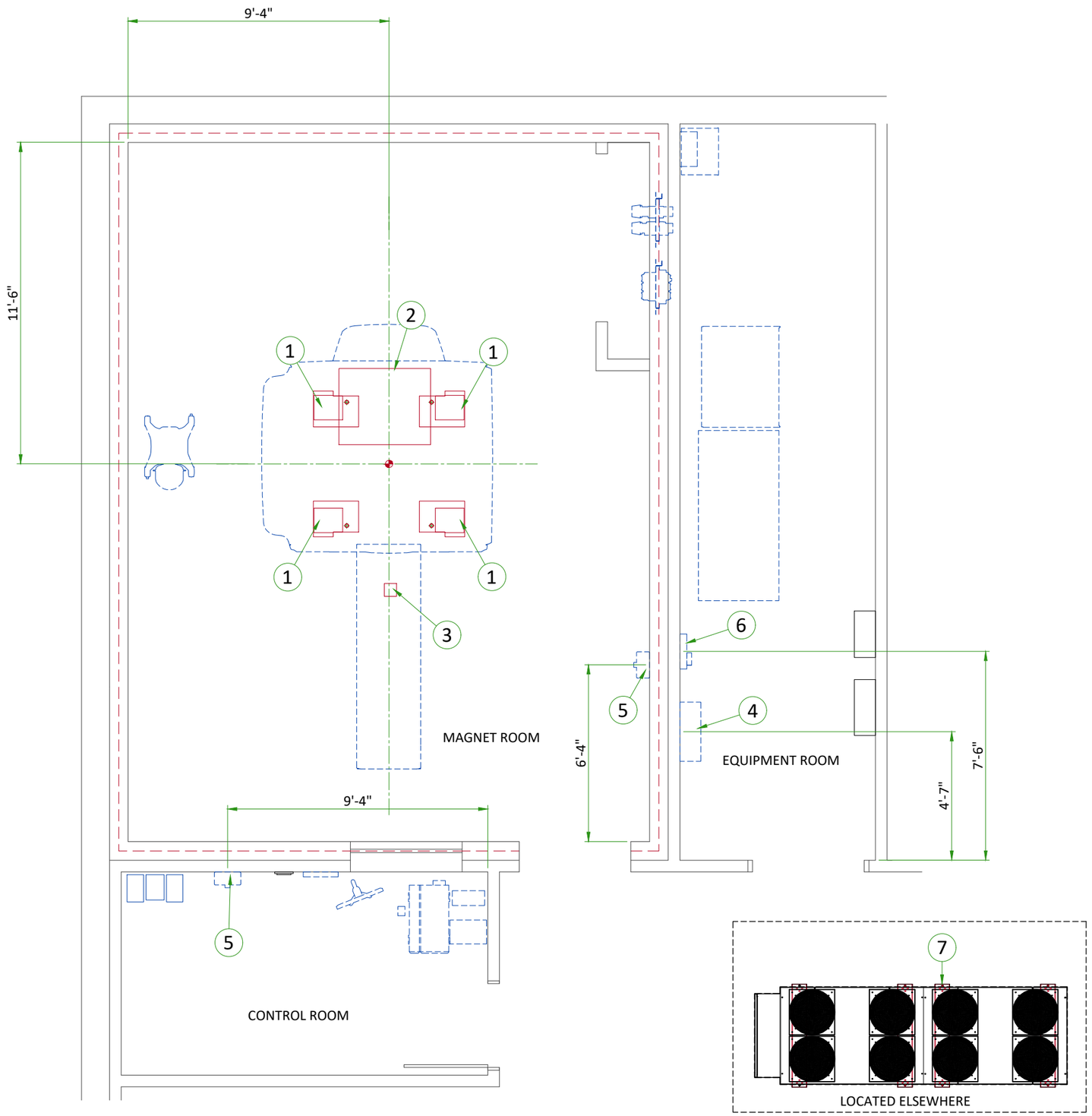

ITEM	DESCRIPTION
	(GE SUPPLIED / CONTRACTOR INSTALLED)
1	Vibroacoustic dampening kit (see floor structural detail)
2	Opening in ceiling for cable connections
	(CONTRACTOR SUPPLIED & INSTALLED)
3	Patient table dock anchoring
4	Structural wall backing for Main Disconnect Panel
5	Structural wall backing for Magnet Rundown Unit
6	Structural wall backing for Magnet Monitor
7	Structural floor support for chiller

MAGNET ON VIBROACOUSTIC DAMPENING KIT "VIBROMAT"

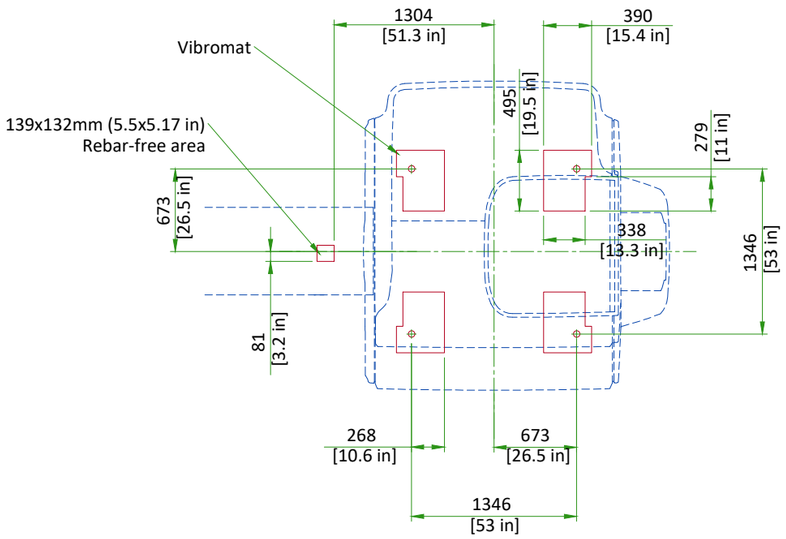

NOT TO SCALE

VibroAcoustic Mat weight: 8 kg [17lbs] (each)

MAGNET ROOM FLOOR SPECIFICATIONS

Magnet, Enclosure, and Patient Table areas must be flat and level within 3 mm (0.125 in) within the shaded area shown

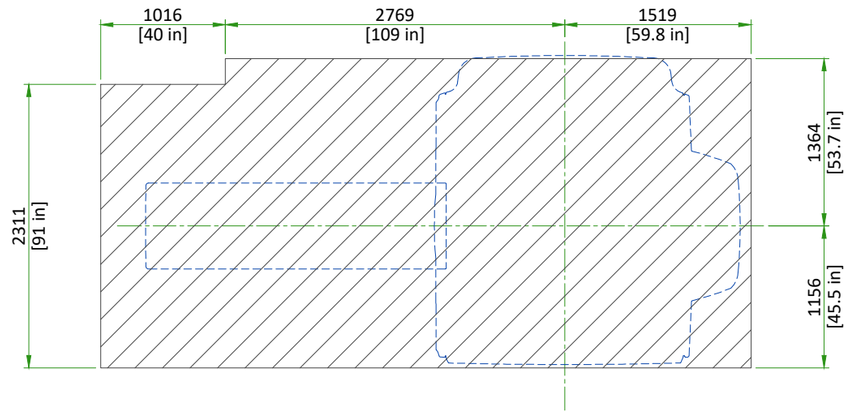

TABLE FRAME ANCHOR MOUNTING REQUIREMENTS

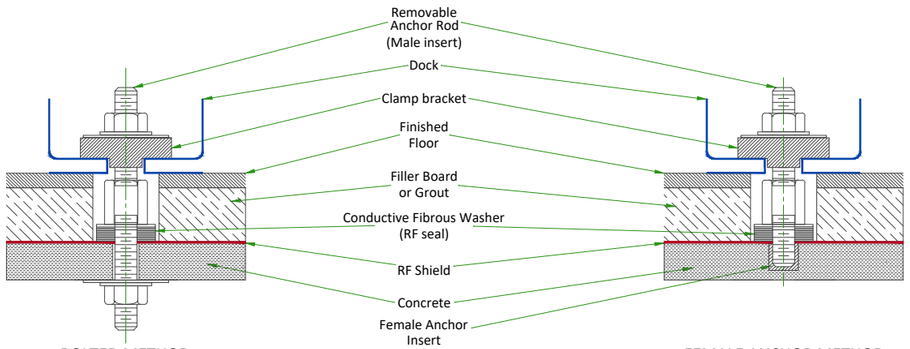

BOLTED METHOD
(CUTAWAY SIDE VIEW)

FEMALE ANCHOR METHOD
(CUTAWAY SIDE VIEW)

NOT TO SCALE

1. The RF Shield vendor must design and install the table frame anchor bolt
2. The table frame anchor hole must be drilled after the Magnet is delivered
3. The table frame anchor must not contact floor rebar or other structural steel
4. The table frame anchor must electrically contact the RF shield at point of entry
5. The table frame anchors must have the following properties:
   a. Anchors must be two-part assembly (male/female)
   b. Female side must be expansion- or epoxy-type
   c. Male side must be a bolt or threaded rod with appropriate-sized nut (bolt or rod must be removable - not epoxied or cemented in place)
   d. Anchors must be electrically conductive
   e. Anchors must be non-magnetic
   f. Anchors must not induce galvanic corrosion with the RF shield
   g. Anchors must be commercially procured
   h. The anchor rod hole clearance in the table anchor base is 11 mm (0.43 in). The anchor rod diameter must be sized appropriately
   i. Anchors must meet the following clamping force: 2669 N (600 lbs)
   j. The anchor rod must extend 40 mm ± 13 mm (1.57 in ±0.5 in) above the finished floor
   k. The anchor rod must be less than 152 mm (6 in) in total length (length above the floor plus embedded length)
6. The RF shield vendor must perform a pull test on the anchor (equal to the clamping force). Results must be provided to the GE Healthcare Project Manager of Installation (PMI).

CEILING OPENING FOR CABLE CONCEALMENT

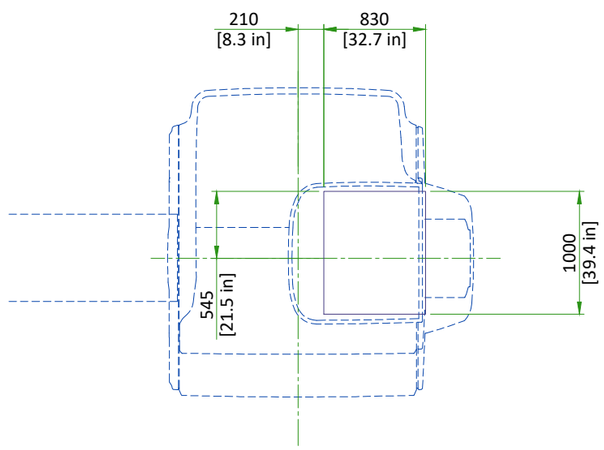

NOT TO SCALE

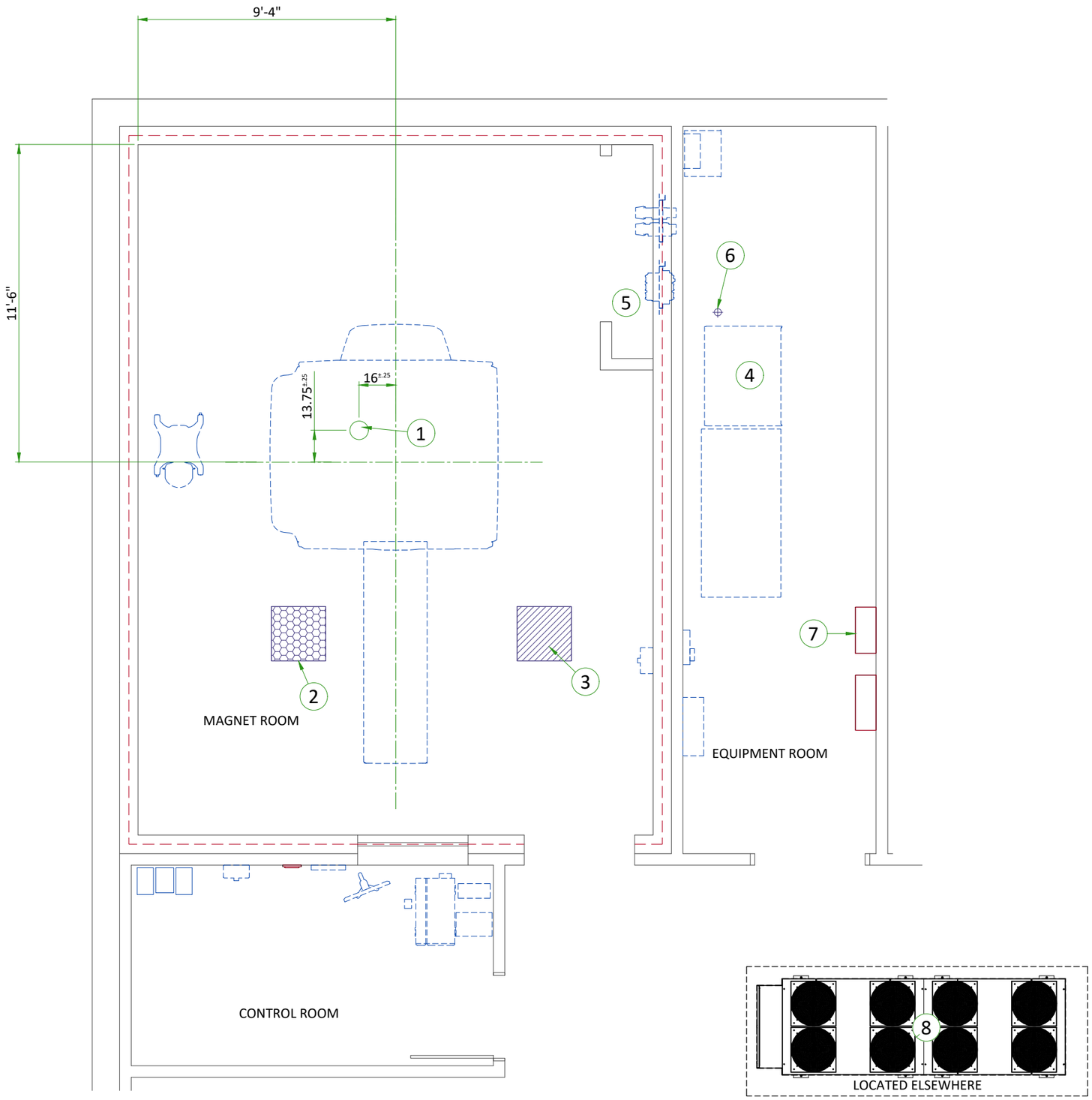

ITEM	DESCRIPTION
1	Cryogen vent (200mm [8"] O.D.)
2	Emergency exhaust vent - refer to magnet room vent requirements (position to be defined)
3	Pressure equalization vent - refer to magnet room vent requirements (position in ceiling to be defined)
4	38mm [1.5"] NPT Male connectors, (2) 38mm [1.5"] copper lines (insulated) and (2) shut off valves. refer to chilled water block diagram
5	Closet must allow free air exchange of 400 CFM between magnet room and closet
6	Floor Drain
7	Provide as needed - low pressure rubber multipurpose hose, inside dia. 1/2" working pressure range: 250 to 499 PSI - refer to the manual city water back-up system detail
8	(2) 50mm [2"] I.D. High pressure hoses and (2) 50mm [2"] to 38mm [1.5"] Reducers

MECHANICAL/PLUMBING NOTES

- All piping, fittings, supports, hoses, clamps, ventlation systems, etc. are to be supplied and installed by the customer or his contractors.
- For complete design and requirements, specifications and guidelines refer to the pre-installation manual: system cooling, cryogen venting, waveguides and exhaust venting.
- An emergency water cooling back-up supply is recommended for continuous cryogen compressor operation. if using an open loop back-up design, ensure a drain is provided. please refer to the pre-install manual for optional back-up coolant supply requirements

TEMPERATURE AND HUMIDITY SPECIFICATIONS

Room	Temperature				Humidity	
	Range		Change [1]		Range %RH	Change %RH/Hr [2]
	°C	°F	°C/Hr	°F/Hr		
Equipment room (at inlet to Equipment room)	15-32 [3]	59-89.6 [3]	3	5	30-75	5
Magnet Room	15-21	59-69.8	3	5	30-60	5
Operator Room	15-32	59-89.6	3	5	30-75	5

NOTE
1. Operating temperature gradient limits shall be between -5°‹ F/Hr (-3°‹ C/Hr) and 5°‹ F/Hr (3°‹ C/Hr), when averaged over 1 hour
2. Operating humidity gradient limits shall be between -5% RH/hour and 5% RH/hour, when averaged over 1 hour
3. Maximum ambient temperature is derated by 1° C (33.8°F) per 175 m (574 ft) above 950 m (3117 ft) (not to exceed 2600 m [8530 ft])

AIR RENEWAL

According to local standards.

NOTE
In case of using air conditioning systems that have a risk of water leakage it is recommended not to install it above electric equipment or to take measures to protect the equipment from dropping water.

MAGNET ROOM VENTING REQUIREMENTS

HVAC VENT REQUIREMENTS

- HVAC vendor must comply with Magnet room temperature and humidity specifications and RF shielding specifications.
- RF Shield vendor must install open pipe or honeycomb HVAC waveguides.
- All serviceable parts in the Magnet room (e.g.: diffusers) must be non-magnetic.
- Waveguides must be nonmagnetic and electrically isolated.
- Incoming air must contain at least **5% air** from outside the Magnet room (inside or outside the facility) to displace residual helium.

EMERGENCY VENT REQUIREMENT

- Exhaust vent system is supplied by the customer.
- All items within the RF enclosure must be non-magnetic.
- The exhaust vent system must be tested and operational before the magnet is installed.
- The exhaust intake vent must be located near the magnet cryogenic vent at the highest point on the finished or drop ceiling.
- The Magnet room exhaust fan and exhaust intake vent must have a capacity of at least **1200 CFM (34 m³/min)** with a minimum of **12 room air exchanges per hour.**
- The exhaust fan must be placed above RF shielding located outside 10 gauss (1mT) and with appropriate waveguide.
- The system must have a manual exhaust fan switch near the Operator Workspace and in the Magnet room near the door (the switches must be connected in parallel).
- All system components must be accessible for customer inspection, cleaning and maintenance

PRESSURE VENT REQUIREMENT

- A **pressure equalizing vent is required** in the magnet room ceiling or in the wall, at the highest point possible.
- The **vent minimum size** must be (**610 mm x 610 mm [24 in x 24 in]**) or equivalent.
- The pressure equalization vent must be located so any Helium gas is not vented into occupied areas.
  Note: Location may affect acoustic noise transmission into occupied spaces.

EQUIPMENT HEAT OUTPUT SPECIFICATIONS

Component	Room	Max kW	Max BTU/hr
Magnet (MAG) and Patient Table (PT)	Magnet	2.95	10060
Primary Pen Wal	Magnet	0.3	1023
	Equipment	0.3	1023
Secondary Pen Wall	Magnet	0	0
	Equipment	0	0
Integrated System Cabinet (ISC)	Equipment	11.5	39215
Integrated Cooling Cabinet (ICC)	Equipment	1.0	3410
Main Disconnect Panel (MDP)	Equipment	0.28	972
Magnet Monitor (MON)	Equipment	0.24	818
Cryocooler Compressor (CRY)	Equipment	0.5	1705
Operator Workspace equipment (OW)	Control	1.45	4945
OPTIONS			
MR Elastography (MRE)	Equipment	0.48	141

MAGNET ROOM EXHAUST FAN SCHEMATIC

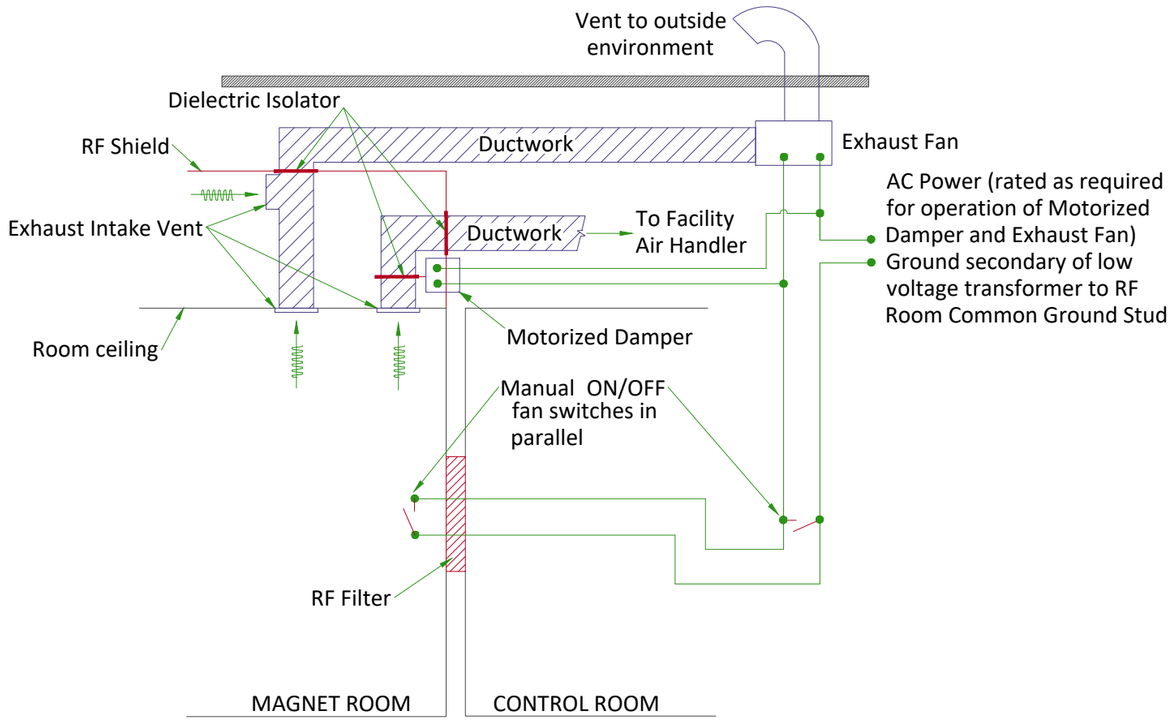

CHILLED WATER BLOCK DIAGRAM

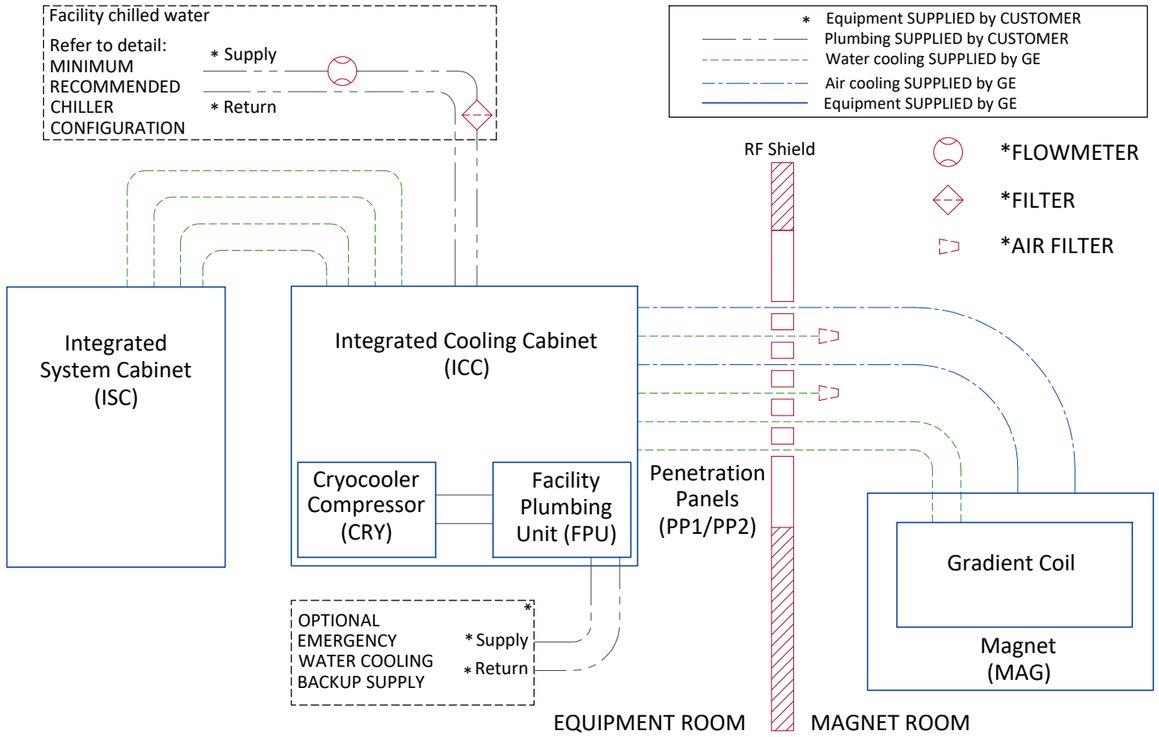

CHILLED WATER SPECIFICATIONS

PARAMETER	REQUIREMENTS
Chiller size	Minimum 70 kW
Inlet temperature	5 to 12°C (41 to 54°F) measured at the inlet to the ICC
Minimum Flow	114L/min (30 gpm)
Maximum Flow	132 L/min (35 gpm)
Availability	Continuous
Antifreeze or treated process water	no more than 50% propylene (PGW) or ethylene (EGW) glycol-water
Maximum pressure drop in ICC at minimum flow	2.2 bar (32 psi) with 50% PGW, 1060 kg/m³ (66.2 lbs/ft³) density
Maximum pressure drop in ICC at maximum flow	2.9 bar (42 psi) with 50% PGW, 1060 kg/m³ (66.2 lbs/ft³) density
Temperature rise at Minimum Flow	14°C (25°F) with 50% PGW; 3346 J/(kg K) specific heat; 1060 kg/m³ density
Temperature rise at Maximum Flow	12°C (22°F) with 50% PGW; 3346 J/(kg K) specific heat; 1060 kg/m³ density
Maximum inlet pressure to ICC	6 bar (87 psi)
Minimum continuous heat load	7.5 kW
Hoses to be provided by customer	38.1 mm (1.5 inch) minimum hose inside diameter
Condensation protection	Facility plumbing to the ICC must be properly routed and insulated to prevent equipment damage or safety hazards
Water quality	Refer to pre-installation manual for detailed specifications

CITY WATER BACKUP SPECIFICATIONS FOR COMPRESSOR

INLET WATER FLOW/TEMPERATURE FOR CRYOCOOLER COMPRESSOR

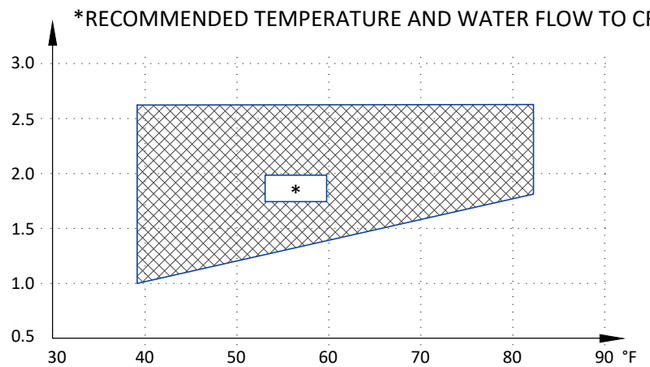

	MIN	MAX
INLET TEMP	39.2°F (4°C)	82.4°F (28°C)
INLET FLOW	1.0 gpm (4 l/min)	2.6 gpm (10 l/min)
TEMP RISE	89.6°F at 1.0 gpm (32°C at 4 l/min flow)	53.6°F at 2.6 gpm (12°C at 10 l/min flow)
HEAT DISSIPATION (kW)	7.2 kW	
PRESSURE DROP	8.7 psi at 2.1 gpm flow (60 kPa at 8 l/min flow)	

MINIMUM RECOMMENDED CHILLER CONFIGURATION

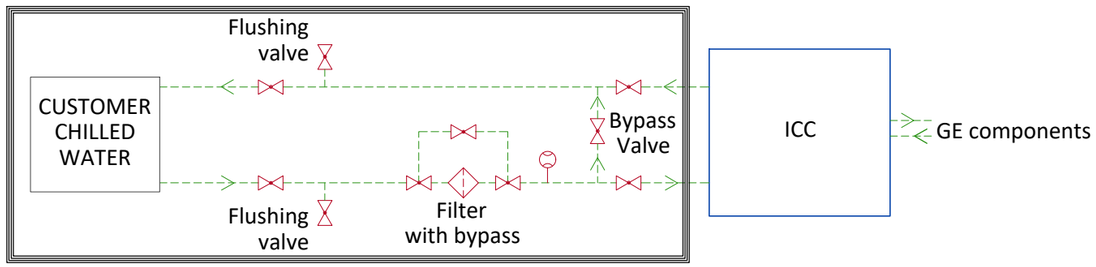

FLOW METER

VALVE

FILTER

Equipment supplied by GE

Customer/contractor supplied and installed

TYPICAL CRYOGENIC VENT PIPE DETAIL

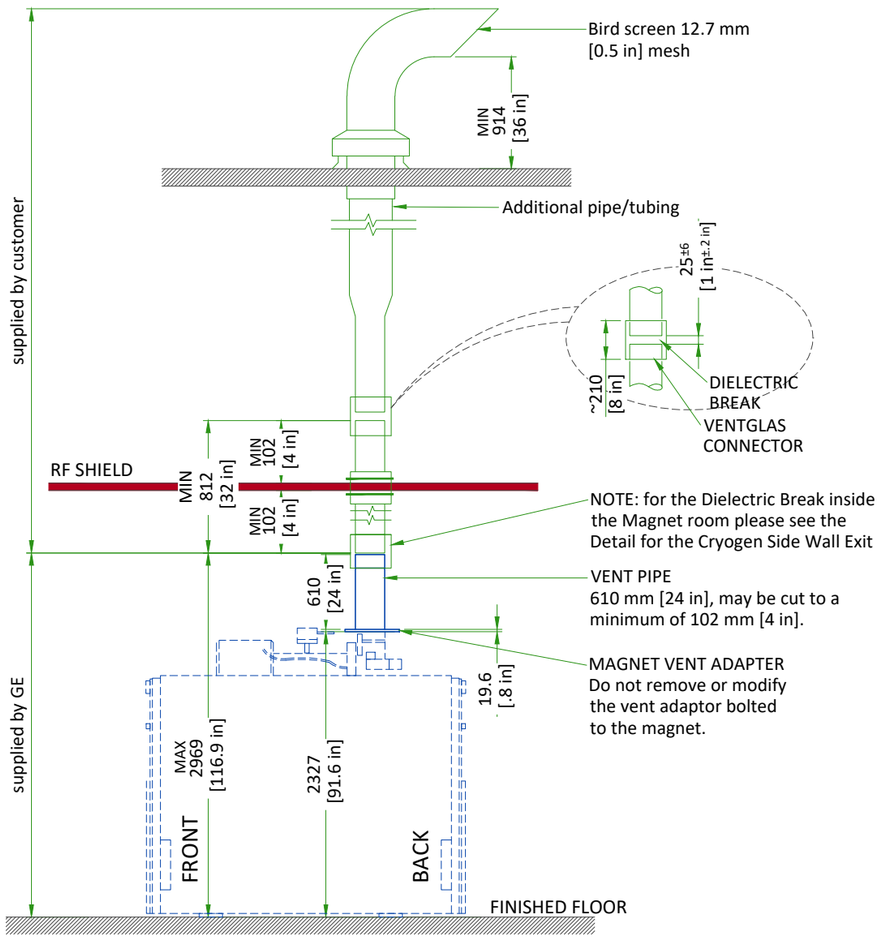

Waveguide is contractor supplied. Minimum 812 mm [32 in]. Must extend at least 100 mm [4 in] on magnet room side of the wall/ceiling and 25±6 mm [1±0.25 in] from the GE supplied pipe below isolation joint. Magnet room end must not be more than 2969 mm [117 in]above finished floor.

1. The 203 mm [8 in] OD vent material must be one of the following materials with the wall thickness indicated:
a. SS 304: Minimum 0.89 mm [0.035 in]; Maximum 3.18 mm [0.125 in]
b. AL 6061-T6: Minimum 2.11 mm [0.083 in]; Maximum 3.18 mm [0.125 in]
c. CU DWV, M or L: Minimum 2.11 mm [0.083 in]; Maximum 3.56 mm [0.140 in]
2. Either tubes or pipes may be used and must be seamless or have welded seams

NOTE
All welds on the pipe must be ground down to a smooth 203 mm [8 in] diameter so that it can be clamped to the Ventglas with enough force.

3. Corrugated pipe or spiral duct must not be used
4. If required, bellows pipe less than 300 mm [12 in] in length may be used as a thermal expansion joint
5. The vent pipe must withstand the maximum pressure listed in the Pre-Installation Manual
6. Waveguide vent material must match the outside diameter of the magnet flanged vent adapter

TYPICAL CRYOGEN SIDE WALL EXIT

KEY COMPONENTS:

- RF waveguide extended from wall to magnet adapter
- Must be all same material and all welded or brazed
- Support system must withstand 11125 N (2500 lbs)
- GE ventglas must be installed in vertical section directly over magnet

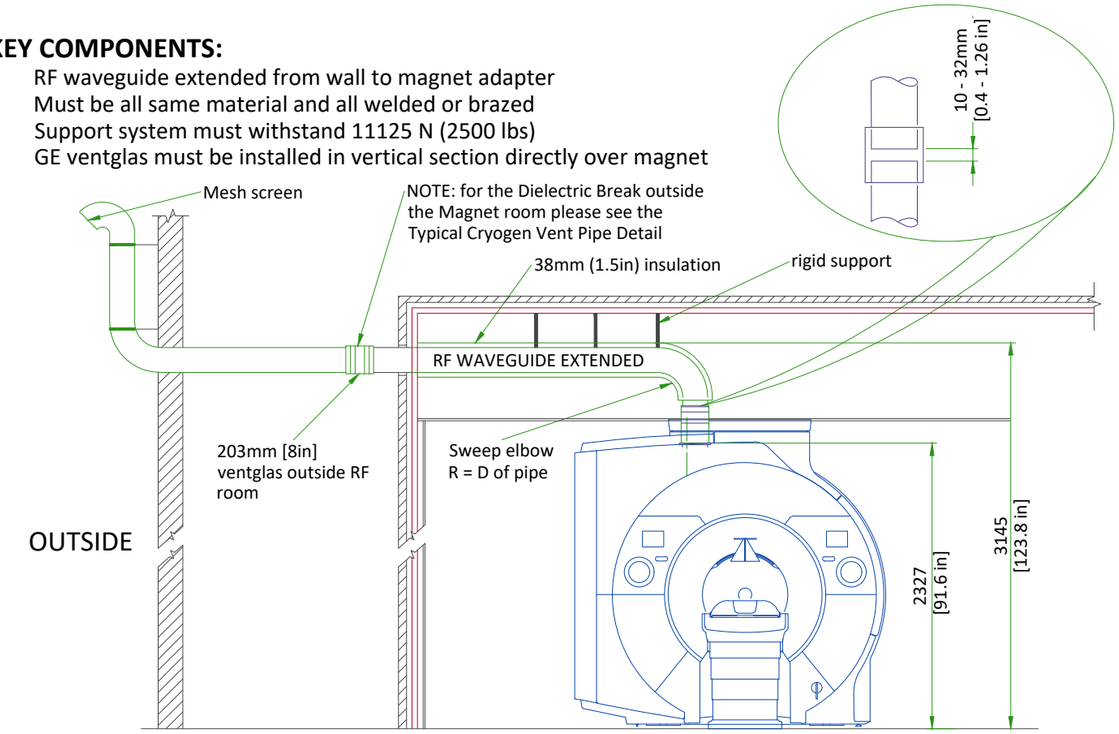

CRYOGENIC VENTING (EXTERIOR)

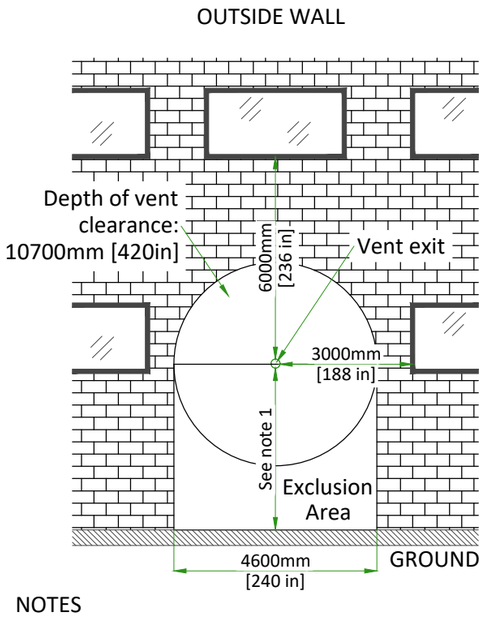

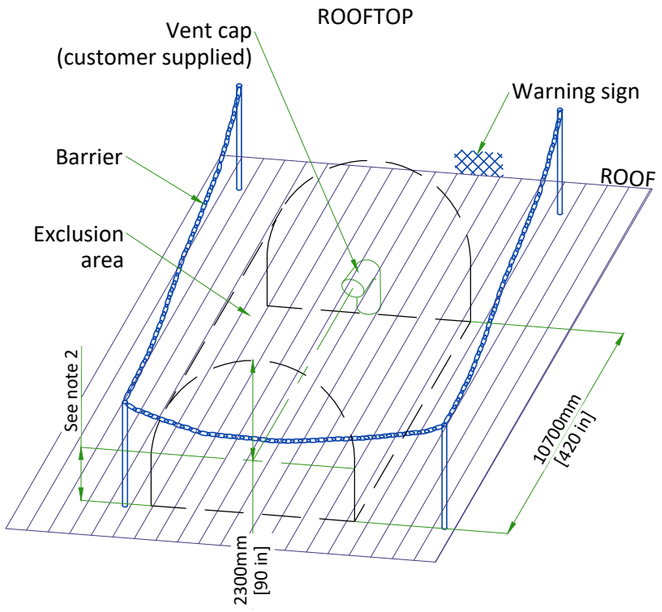

NOTES

(1) Restricted area: minimum distance between vent pipe and ground is 3660mm [144 in]. Barriers are required. Public area: barriers are not required if height is > 5000mm [197 in].

(2) The bottom of the 90° elbow must be at least 914mm [36 in] above the roof deck (or higher if at risk of being blocked by drifting snow, sand, or other potential obstructions.)

NOT TO SCALE

MAGNET CRYOGENIC VENT SYSTEM PRESSURE DROP MATRIX

Outer dia. of pipe (D)	Distance of vent system component from magnet		Pressure drop for straight pipe		Std sweep 45°elbow		Long sweep 45° elbow		Std sweep 90° elbow		Long sweep 90° elbow		90° miter bend	
	ft	m	psi/ft	kPa/m	psi	kPa	psi	kPa	psi	kPa	psi	kPa	psi	kPa
8 in. (200mm)	0- 10	0.00-3.05	0.14	3.22	1.12	7.70	0.74	5.13	2.09	14.43	1.40	9.62	4.19	28.86
	10-20	3.05-6.10	0.24	5.49	1.83	12.63	1.22	8.42	3.43	23.67	2.29	15.78	6.87	47.34
	20- 30	6.10-9.15	0.36	8.23	2.49	17.20	1.66	11.45	4.67	32.21	3.11	21.48	9.34	64.43
	30- 40	9.15-12.2	0.47	10.65	3.11	21.42	2.07	14.26	5.82	40.11	3.88	26.74	11.64	80.23
	40- 50	12.20-15.25	0.57	12.80	3.67	25.32	2.45	16.86	6.88	47.42	4.58	31.61	13.75	94.84
	50- 60	15.25-18.30	0.65	14.68	4.20	28.93	2.79	19.26	7.86	54.17	5.24	36.11	15.71	108.33
	60- 80	18.29-24.39	0.77	17.44	5.13	35.35	3.41	23.53	9.60	66.16	6.40	44.11	19.19	132.33
10 in. (250mm)	0-20	0.00-6.10	0.06	1.280	0.62	4.29	0.41	2.86	1.17	8.04	0.78	5.36	2.33	16.07
	20-40	6.10-12.22	0.12	2.725	1.05	7.25	0.70	4.83	1.97	13.58	1.31	9.05	3.94	27.16
	40-60	12.22-18.29	0.17	3.904	1.43	9.86	0.95	6.56	2.67	18.44	1.78	12.29	5.35	36.88
	60-80	18.29-24.39	0.21	4.859	1.76	12.14	1.17	8.07	3.29	22.70	2.19	15.13	6.58	45.40
	80-100	24.39-30.49	0.25	5.626	2.05	14.14	1.36	9.40	3.83	26.43	2.56	17.62	7.67	52.86
12 in. (300mm)	0-20	0.00-6.10	0.020	0.441	0.26	1.78	0.17	1.19	0.48	3.34	0.32	2.22	0.97	6.67
	20-40	6.10-12.22	0.041	0.937	0.43	3.00	0.29	1.99	0.81	5.61	0.54	3.74	1.63	11.22
	40-60	12.22-18.29	0.060	1.353	0.59	4.08	0.39	2.72	1.11	7.64	0.74	5.09	2.22	15.27
	60-80	18.29-24.39	0.075	1.702	0.73	5.06	0.49	3.36	1.37	9.45	0.91	6.30	2.74	18.89
	80-100	24.39-30.49	0.088	1.991	0.86	5.20	0.57	3.93	1.60	11.06	1.07	7.37	3.21	22.12
14 in. (350mm)	0-20	0.00-6.10	0.008	0.180	0.123	0.85	0.082	0.57	0.231	1.59	0.154	1.06	0.462	3.18
	20-40	6.10-12.22	0.017	0.380	0.206	1.42	0.137	0.95	0.386	2.66	0.257	1.77	0.771	5.32
	40-60	12.22-18.29	0.024	0.552	0.281	1.94	0.187	1.29	0.525	3.62	0.350	2.42	1.051	7.25
	60-80	18.29-24.39	0.031	0.699	0.349	2.41	0.232	1.60	0.652	4.50	0.435	3.00	1.304	8.99
	80-100	24.39-30.49	0.036	0.824	0.411	2.83	0.272	1.88	0.766	5.28	0.511	3.52	1.533	10.57
16 in. (400mm)	0-20	0.00-6.10	0.004	0.083	0.065	0.45	0.043	0.30	0.122	0.84	0.081	0.56	0.244	1.68
	20-40	6.10-12.22	0.008	0.174	0.108	0.75	0.072	0.50	0.202	1.39	0.135	0.93	0.404	2.79
	40-60	12.22-18.29	0.011	0.253	0.148	1.02	0.098	0.68	0.275	1.90	0.184	1.27	0.551	3.80
	60-80	18.29-24.39	0.014	0.323	0.184	1.27	0.122	0.84	0.342	2.36	0.228	1.57	0.685	4.72
	80-100	24.39-30.49	0.017	0.383	0.022	1.49	0.144	0.99	0.404	2.78	0.269	1.86	0.807	5.57

Notes

1. Elbows with angles greater than 90 deg must not be used
2. Data in Table 2 is based on the following facts and assumptions:

a. Initial flow conditions at magnet interface
b. EM energy (13MJ) is dumped to He during quench and rises He temperature to 10 Kelvin
c. Gas temperature starting at 10 Kelvin and increase with length determined by thermal energy balance
d. 90% He is assumed to be evacuated within 30 sec. None left after quench.
e. Absolute roughness is assumed to be 0.25 mm.
f. R/D = 1.0 for standard sweep elbows, R/D = 1.5 for long sweep elbows where D = outer diameter of pipe; R = radius of bend

3. The total pressure drop of the entire cryogenic vent system must be less than 20 psi (138 kPa). The calculation starts at the magnet vent interface and ends at the termination point outside the building.

LIGHTING REQUIREMENTS

- All lighting fixtures and associated components must meet all RF shielded room and RF grounding requirements (e.g., track lighting is not recommended due to possible RF noise).
- All lighting must use direct current (the DC must have less than 5% ripple).
- 300 lux must be provided at the front of the magnet for patient access and above the magnet for servicing.
- Fluorescent lighting must not be used in the magnet room.
- Lighting must be adjusted using a discrete switch or a variable DC lighting controller.
- Scr dimmers or rheostats must not be used.
- DC led lighting may be used if the power source is located outside the magnet room RF.
- Battery chargers (e.g., used for emergency lighting) must be located outside the magnet RF room.
- Short filament length bulbs are recommended.
- Linear lamps are not recommended due to the high burnout rate.

CONNECTIVITY REQUIREMENTS

Broadband Connections are necessary during the installation process and going forward to ensure full support from the Engineering Teams for the customers system. Maximum performance and availability for the customers system is maintained and closely monitored during the lifetime of the system. Proactive and reactive maintenance is available utilising the wide range of digital tools using the connectivity solutions listed below:

- Site-to-Site VPN/GE Solution
- Site-to-Site VPN/Customer Solution
- Connection through Dedicated Service Network
- Internet Access - connectivity for InSite 2.0

The requirements for these connectivity solutions are explained in the broadband solutions catalogue (separate document).

ELECTRICAL NOTES

1. All wires specified shall be copper stranded, flexible, thermo-plastic, color coded, cut 10 foot long at outlet boxes, duct termination points or stubbed conduit ends. All conductors, power, signal and ground, must be run in a conduit or duct system. Electrical contractor shall ring out and tag all wires at both ends. Wire runs must be continuous copper stranded and free from splices.

1.1. Aluminum or solid wires are not allowed.

2. Wire sizes given are for use of equipment. Larger sizes may be required by local codes.
3. It is recommended that all wires be color coded, as required in accordance with national and local electrical codes.
4. Conduit sizes shall be verified by the architect, electrical engineer or contractor, in accordance with local or national codes.
5. Convenience outlets are not illustrated. Their number and location are to be specified by others. Locate at least one convenience outlet close to the system control, the power distritbution unit and one on each wall of the procedure room. Use hospital approved outlet or equivalent.
6. General room illumination is not illustrated. Caution should be taken to avoid excessive heat from overhead spotlights. Damage can occur to ceiling mounting components and wiring if high wattage bulbs are used. Recommend low wattage bulbs no higher than 75 watts and use dimmer controls (except MR). Do not mount lights directly above areas where ceiling mounted accessories will be parked.
7. Routing of cable ductwork, conduits, etc., must run direct as possible otherwise may result in the need for greater than standard cable lengths (refer to the interconnection diagram for maximum usable lengths point to point).
8. Conduit turns to have large, sweeping bends with minimum radius in accordance with national and local electrical codes.
9. A special grounding system is required in all procedure rooms by some national and local codes. It is recommended in areas where patients might be examined or treated under present, future, or emergency conditions. Consult the governing electrical code and confer with appropriate customer administrative personnel to determine the areas requiring this type of grounding system.
10. The maximum point to point distances illustrated on this drawing must not be exceeded.
11. Physical connection of primary power to GE equipment is to be made by customers electrical contractor with the supervision of a GE representative. The GE representative would be required to identify the physical connection location, and insure proper handling of GE equipment.
12. GEHC conducts power audits to verify quality of power being delivered to the system. The customer's electrical contractor is required to be available to support this activity.

- All junction boxes, conduit, duct, duct dividers, switches, circuit breakers, cable tray, etc., are to be supplied and installed by customers electrical contractor.
- Conduit and duct runs shall have sweep radius bends
- Conduits and duct above ceiling or below finished floor must be installed as near to ceiling or floor as possible to reduce run length.
- Ceiling mounted junction boxes illustrated on this plan must be installed flush with finished ceiling.
- All ductwork must meet the following requirements:

1.Ductwork shall be metal with dividers and have removable, accessible covers.
2.Ductwork shall be certified/rated for electrical power purposes.
3.Ductwork shall be electrically and mechanically bonded together in an approved manner.
4.PVC as a substitute must be used in accordance with all local and national codes.

- All openings in raceway and access flooring are to be cut out and finished off with grommet material by the customers contractor.
- General contractor to insert pull cords for all cable run conduits between the equipment room and the operators control room.
- 10 foot pigtails at all junction points.
- Grounding is critical to equipment function and patient safety. Site must conform to wiring specifications shown on this plan.

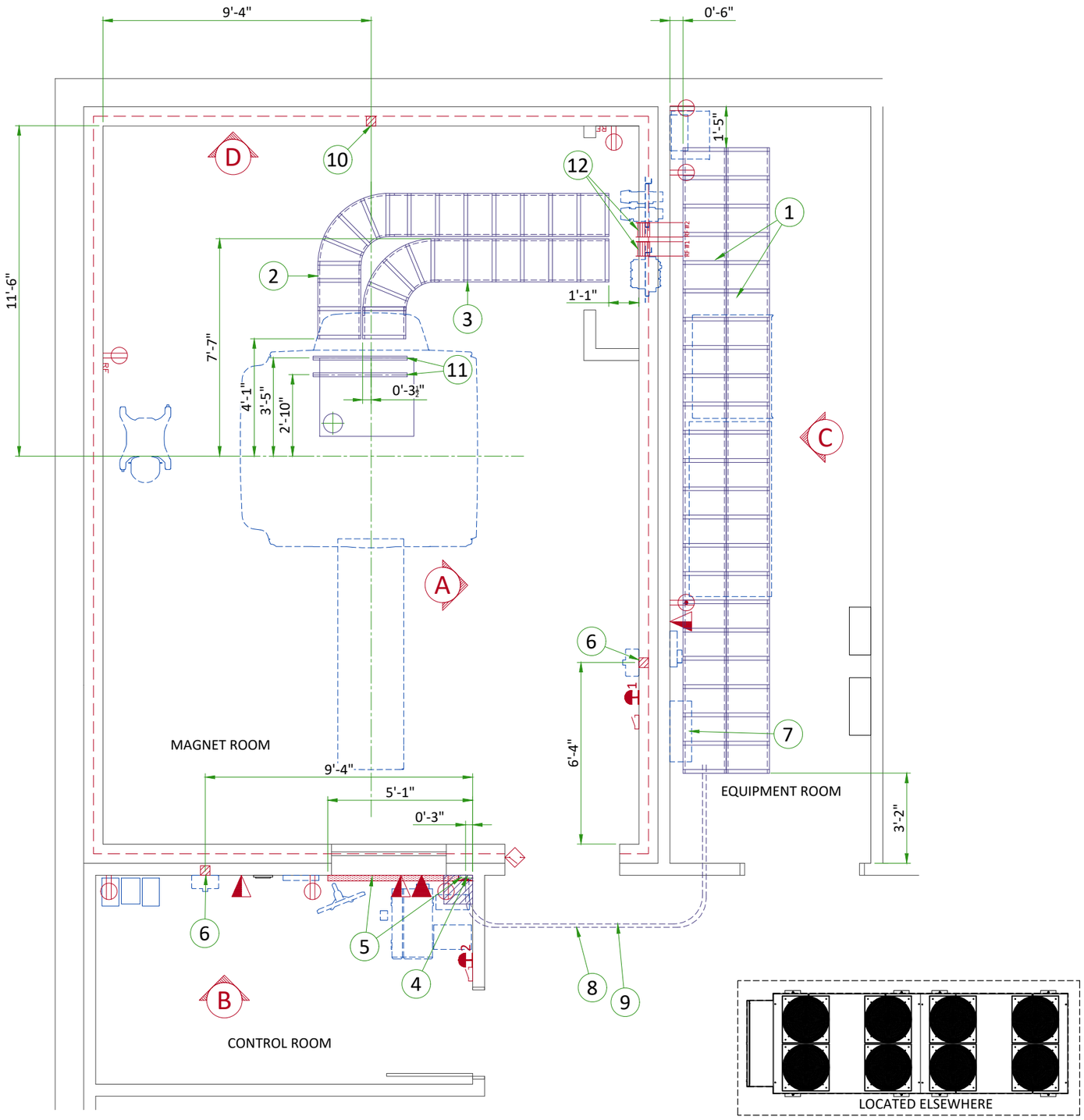

ITEM	Electrical Layout Item List
1	Cable ladder 18" x 6" [450 x 150]
2	Non-ferrous cable ladder 18" x 6" [450 x 150]
3	Non-ferrous cable ladder for gradient cables 18" x 6" [450 x 150]
4	Box above ceiling size per local code
5	Surface wall duct with minimum 2 dividers 6' x 3 1/2" [150 x 100]
6	Box in wall 4" x 4" x 2" [100 x 100 x 50]
7	Main disconnect panel
8	Conduit above RF screen 2" [50]
9	Conduit above RF screen 3" [75]
10	Box in wall 4" x 4" x 4" [100 x 100 x 100]
11	Non-ferrous unistrut cable support
12	RF Filters - grounded to RF shield at Common Ground Stud

ITEM	QTY	Outlet Legend for GE Equipment
		System emergency off (EO1-2), (recommended height 1.2m [48"] above floor)
		Door interlock switch
		Emergency exhaust fan switch 1.2m [48"] height recommended)
		Duplex hospital grade, dedicated wall outlet 120-v, single phase power
		Network outlet
		Dedicated telephone lines/network connection
		Duplex hospital grade, dedicated outlet 120-v emergency, single phase power, 15a
		Duplex hospital grade, dedicated outlet 120-v, single phase outlet routed through RF filter

Additional Conduit Runs
(Contractor Supplied and Installed)

From (Bubble # / Item)		To (Bubble # / Item)	Qty	Size In.	Size mm
7	Main Disconnect Panel	Facility Power	1	As req'd	As req'd
7	Main Disconnect Panel	Integrated Systems Cabinet	1	As req'd	As req'd
		System emergency off 2	1	1/2	16
	System emergency off 2	Cooling Penetration Panel	1	1/2	16
	Door switch	Integrated Systems Cabinet	1	3/4	20
	System emergency off 1	Cooling Penetration Panel	1	3/4	20
6	Magnet Rundown Unit	Magnet	1	1	25
		RF filter #1	1	As req'd	As req'd
	RF filter #1	120-V 1Ø Power	1	As req'd	As req'd
	Room Light	RF filter #2	1	As req'd	As req'd
	RF filter #2	Facility emergency power	1	As req'd	As req'd
10	TV Camera	Waveguide or RF filter	1	1	25
4	TV Monitor		1	1	25
	Injector control unit	Waveguide or RF filter	1	2 1/2	70
	Injector head		1	As req'd	As req'd
	Integrated battery charging unit		1	As req'd	As req'd
	Dimplex Chiller	Remote Graphic Display	1	3/4	20
		Facility Power	1	as Req'd	as Req'd

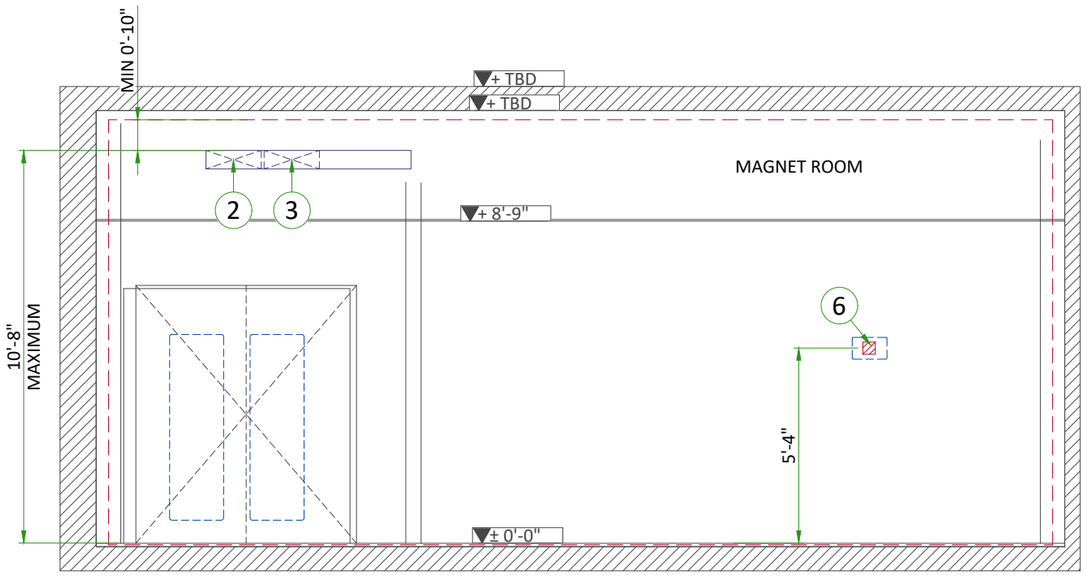
MIN 0'-10"
+ TBD
+ TBD
MAGNET ROOM
2
3
+ 8'-9"
6
10'-8"
MAXIMUM
5'-4"
± 0'-0"

A

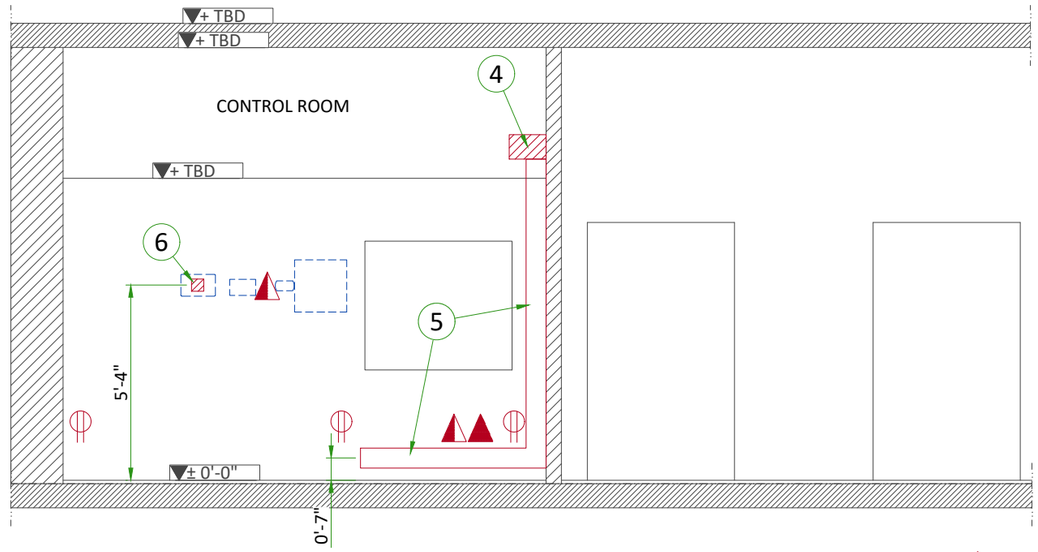
+ TBD
+ TBD
CONTROL ROOM
4
+ TBD
6
5
5'-4"
± 0'-0"
0'-7"

B

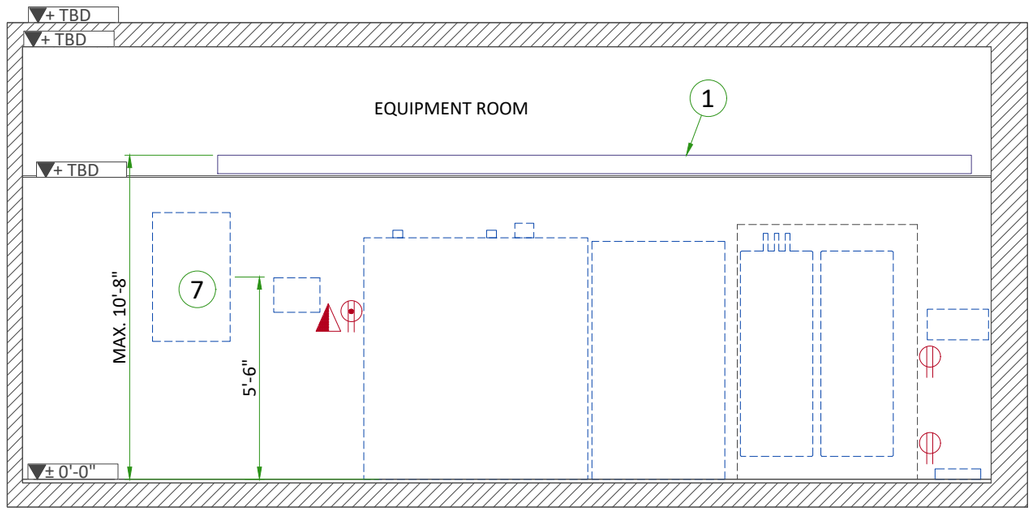
+ TBD
+ TBD
EQUIPMENT ROOM
1
+ TBD
7
MAX. 10'-8"
5'-6"
± 0'-0"

C

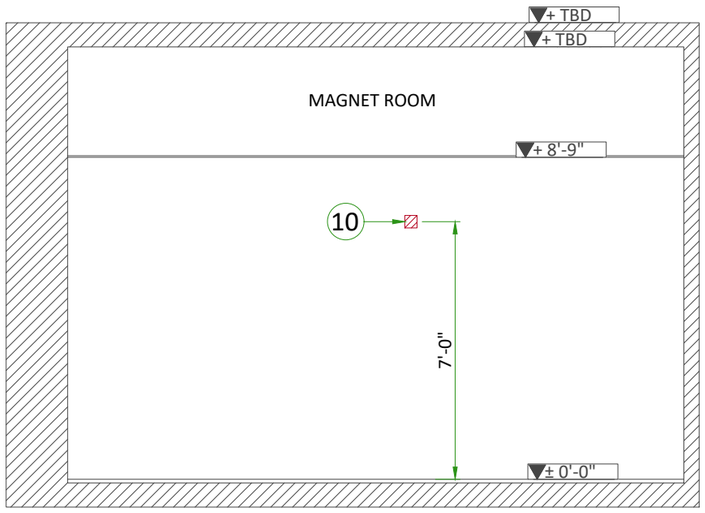
+ TBD
+ TBD
MAGNET ROOM
+ 8'-9"
10
7'-0"
± 0'-0"

D

CABLE TRAYS IN EQUIPMENT ROOM

CABLE TRAY DETAIL

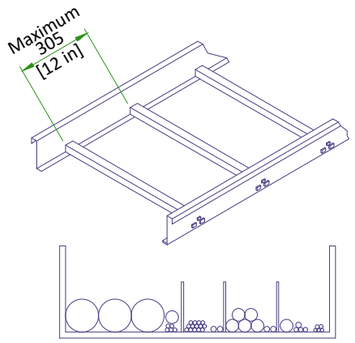

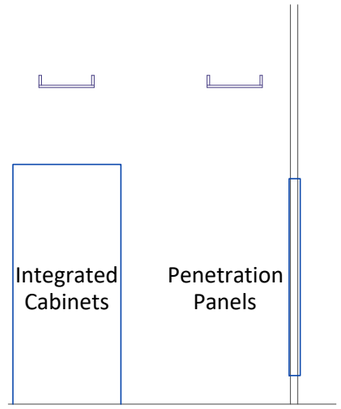

Minimum Cable Tray Width					
	ISC		ICC		OW
	Electrical	Air/Water	Electrical	Air/Water	Electrical
ICC	76 [3 in]	102 [4 in]	N/A	N/A	N/A
OW	76 [3 in]	N/A	76 [3 in]	N/A	N/A
ISC PW	450 [18 in]	N/A	N/A	N/A	N/A
ICC PW	76 [3 in]	N/A	76 [3 in]	300 [12 in]	76 [3 in]

NOT TO SCALE

CABLE TRAYS REQUIREMENTS IN MAGNET ROOM

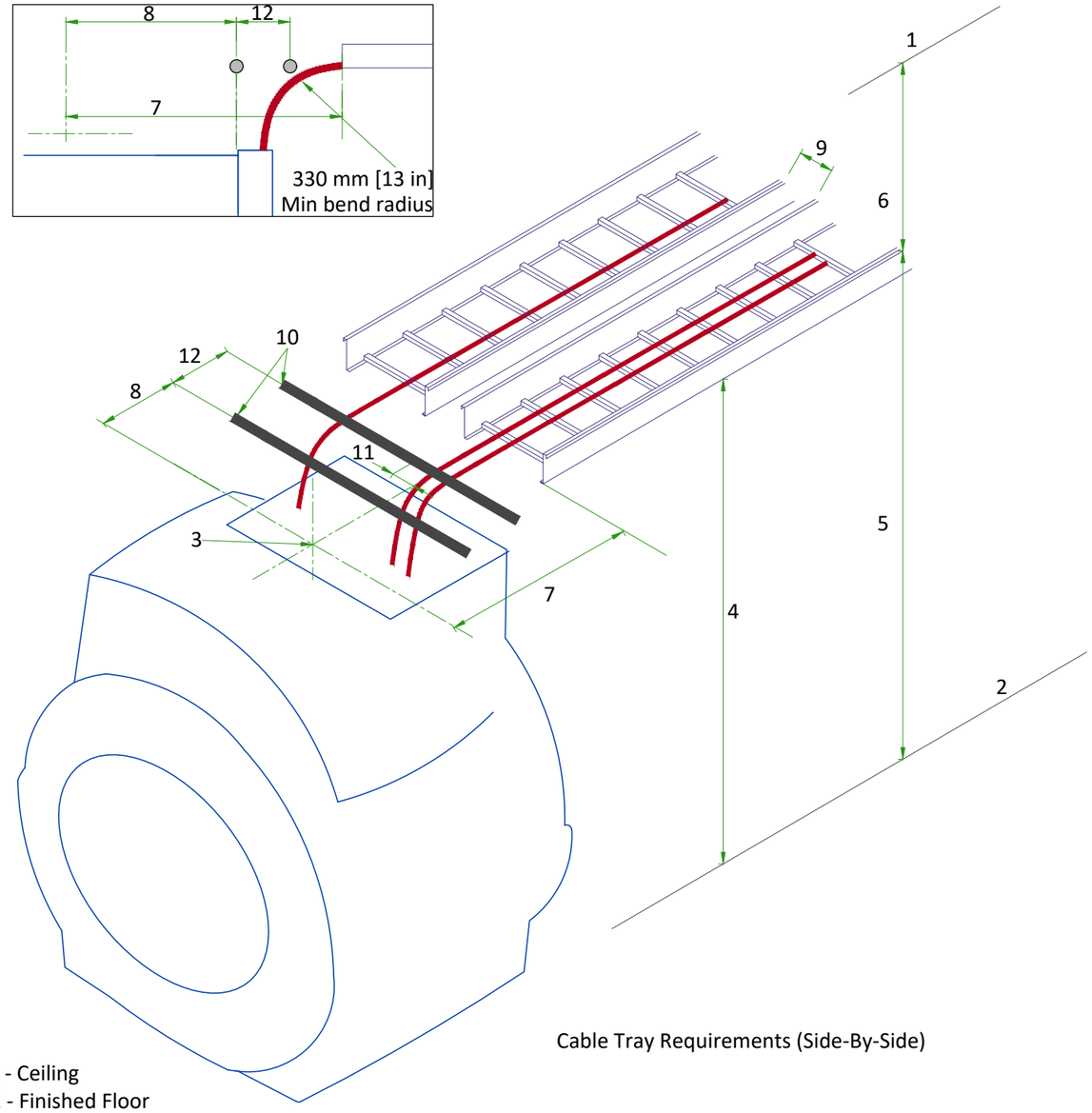

Cable Tray Requirements (Side-By-Side)

1 - Ceiling
2 - Finished Floor
3 - Magnet isocenter
4 - Minimum cable tray support height required at back of Magnet: 2578 mm [101.5 in].
Tray height may be lower at other points to avoid obstructions.
5 - Maximum height from floor to top of tray (anywhere in Magnet room): 3251 mm [128 in].
6 - Minimum distance from top of cable tray to ceiling: 254 mm [10 in].
Minimum distance on either side of an obstruction: 254 mm [10 in], minimum distance from top of cable tray to Obstruction: 178 mm [7 in].
7 - Tray end to isocenter: 1245 ±12 mm [49 ±0.5 in].
8 - Other cable termination to isocenter: 864 ±12 mm [34 ±0.5 in].
9 - Minimum distance between trays: 12 mm [0.5 in].
10 - Non-ferrous cable support
11 - The center of the gradient cable group is 89 mm [3.5 in] from the inside edge of the tray, in line with the magnet center.
12 - Distance between non-ferrous cable support: maximum 305 mm [12 in].

POWER REQUIREMENTS

SPECIFICATIONS OF MAIN POWER INPUT

POWER SUPPLY	**380/400/415/480V +/-10%, 3 PHASE + GND**
FREQUENCIES	**50/60Hz ± 3Hz**
MAXIMUM INPUT POWER (50 msec MAX)	**349 kVA**
CONTINUOUS POWER	**144 kVA**
STAND-BY POWER	**< 17kVA**

- Power input must be separated from any others which may generate transients (elevators, air conditioning, radiology rooms equipped with high speed film changers...).
- If a neutral conductor is present, it can be terminated on the neutral bus provided in the GE supplied MDP.
- Recommended voltage total harmonic distortion less than 2.5%. Voltage phase imbalance must not exceed 2%.
- Lock-out/Tag-out: The Main Disconnect Panel (MDP) shall provide an external single point lock-out/tag-out feature for the entire system and a means to externally lock-out/tag-out each output breaker independently. Each lock-out/tag-out feature shall accommodate a standard sized lock hasp.

SPECIFICATIONS OF EMERGENCY POWER REQUIREMENT

MAGNET MONITOR REQUIRES A 110/220 VAC, 50/60 HZ, 3.0 A FACILITY SUPPLIED OUTLET. POWER AT THE OUTLET MUST BE CONTINUOUSLY AVAILABLE.

FOR CRYOCOOLER COMPRESSOR	
POWER INPUT	**380/400/415/460/480V, THREE-PHASE**
POWER DEMAND	**MIN 9kVA/RECOMMENDED 12 kVA**
FREQUENCY	**50/60Hz ± 3Hz**
Power to Cryocooler Compressor must be removed when emergency off circuit is actuated.	

CABLES

- Power and cable installation must comply with the distribution diagram.
- Size of the MDP power input cable is determined by the customer, taking power demand, MDP main breaker size, and admissible voltage drops into consideration.
- All cables must be stranded copper and cable color codes must comply with standards for electrical installation.
- Cables from light signaling and emergency off switches will go to the MDP with a pigtail length of 1.5m [4.9ft], and will be connected during installation.
- Each conductor will be identified and isolated (screw connector).

GROUND SYSTEM

- The equipotential link will be by means of an equipotential bar.
- The grounding point of MDP is directly connected to the building's ground by an isolated copper cable.

GUIDANCE ON SLECTION OF FEEDER AND TRANSFORMER FOR MR SYSTEM		
	Direct feed from facility to MR system	MR system fed by dedicated facility distribution transformer
Prerequisite Conditions		
MR System Incoming Voltage	480V 3-phase	
Minimum Source short-circuit kVA	10,500 kVA (at source of feeder to MDP)	10,500 kVA (at input to distribution transformer)
Minimum No-Load Voltage	460V	475V (transformer secondary tapped accordingly)
Feeder and Transformer Recommendations		
Dedicated Distribution Transformer Recommendations	N/A	Size: 300 kVA Impedance (Z): ≤4% K-Factor: ≥ K=20 250A overcurrent protection on secondary*
Maximum Feeder Length*	215 ft	130 ft
Feeder Size - 3-phase power conductors*	250 kcmil Cu	250 kcmil Cu
Feeder Size - Ground (USA)*	4 AWG Cu (equipment grounding conductor)	2 AWG Cu (supply side bonding jumper) 4 AWG Cu (equipment grounding conductor)
Feeder Size - Ground (Canada)*	4 AWG Cu (bonding conductor)	4 AWG Cu (bonding conductor)
* NOTE: Recommendations shown apply only to cases defined exactly as shown in this table and when not in conflict with local electrical codes . For all other cases, refer to the local codes and the System Voltage Regulation Calculator located on the GE Healthcare Site Planning Website		

POWER DISTRIBUTION

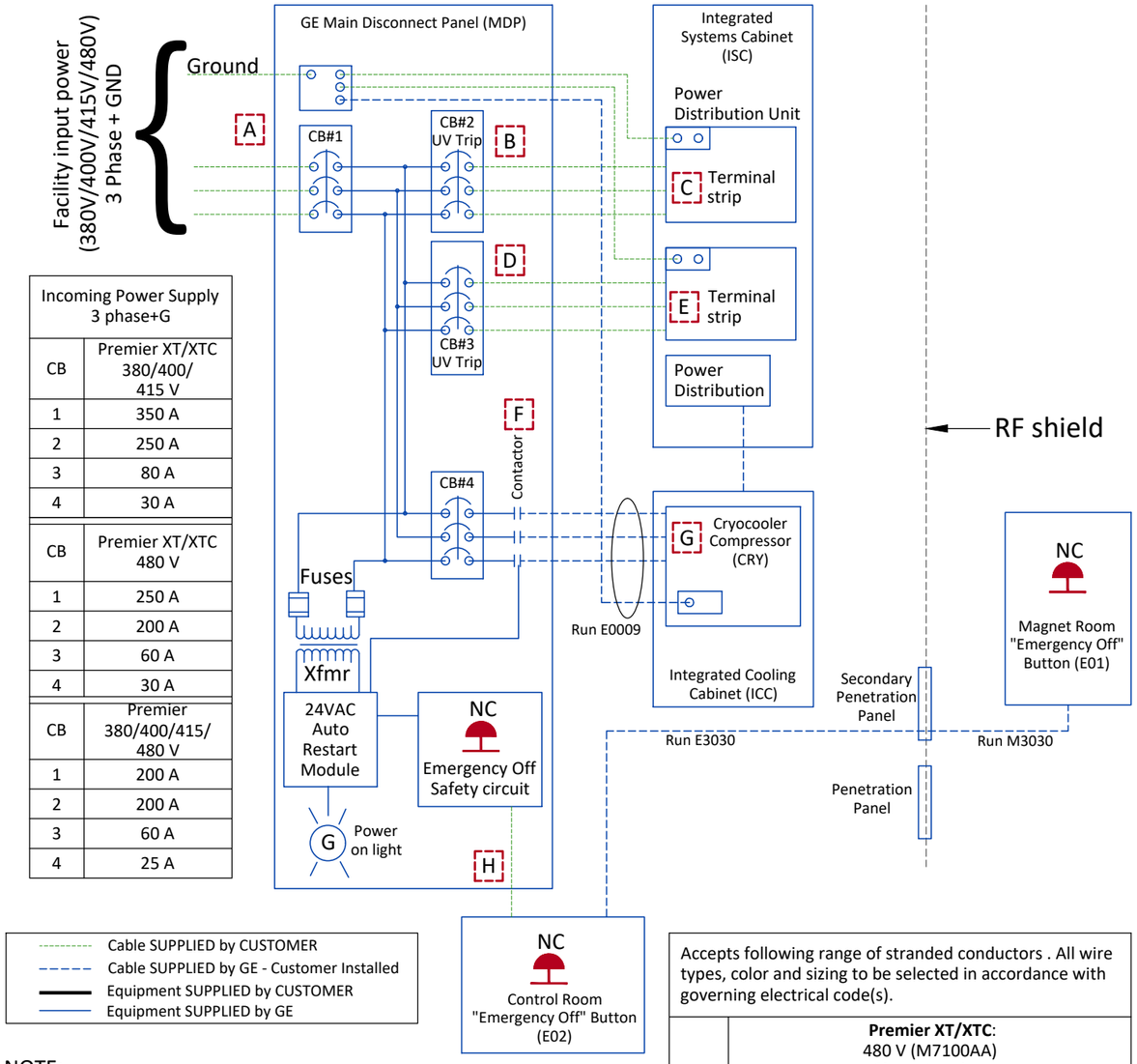

Incoming Power Supply 3 phase+G	
CB	Premier XT/XTC 380/400/ 415 V
1	350 A
2	250 A
3	80 A
4	30 A
CB	Premier XT/XTC 480 V
1	250 A
2	200 A
3	60 A
4	30 A
CB	Premier 380/400/415/ 480 V
1	200 A
2	200 A
3	60 A
4	25 A

- Cable SUPPLIED by CUSTOMER
- Cable SUPPLIED by GE - Customer Installed
- Equipment SUPPLIED by CUSTOMER
- Equipment SUPPLIED by GE

NOTE:

- Cryocooler Compressor (CRY) must operate 24 hours per day, 7 days per week.
- Runs E0009, E3030, and M3030 are GE supplied cables. All other wiring is customer supplied and installed.
- Two remote Emergency Off Buttons are supplied with the MDP. Emergency Off removes power from all outputs when activated.
- All MDP output circuits drop out on loss of power. The Cryocooler (CRY) circuit will automatically restart upon restoration of power.
- GE MDP Short circuit current rating is 25,000 amperes at 480 VAC.
- GE MDP is NRTL labeled.
- All feeder circuits require dedicated ground wires.

Accepts following range of stranded conductors . All wire types, color and sizing to be selected in accordance with governing electrical code(s).

	Premier XT/XTC: 480 V (M7100AA) **Signa Premier**: 380-480 V (M7101MD)			
	Phase		Ground	
Item	AWG/MCM	sq mm	AWG/MCM	sq mm
A	8-350	10-185	6-600	16-300
B	8-350	10-185	6-300	16-150
C	6-250	16-120	6-350	16-185
D	12-3/0	4-95	6-300	16-150
E	10-2	6-35	12-2	4-35
F	14-8	2.5-10	14-4	2.5-25
G	14-10	2.5-6	14-10	2.5-6
H	22-8	0.5-10	N/A	N/A

FACILITY SUPPLIED WIRING

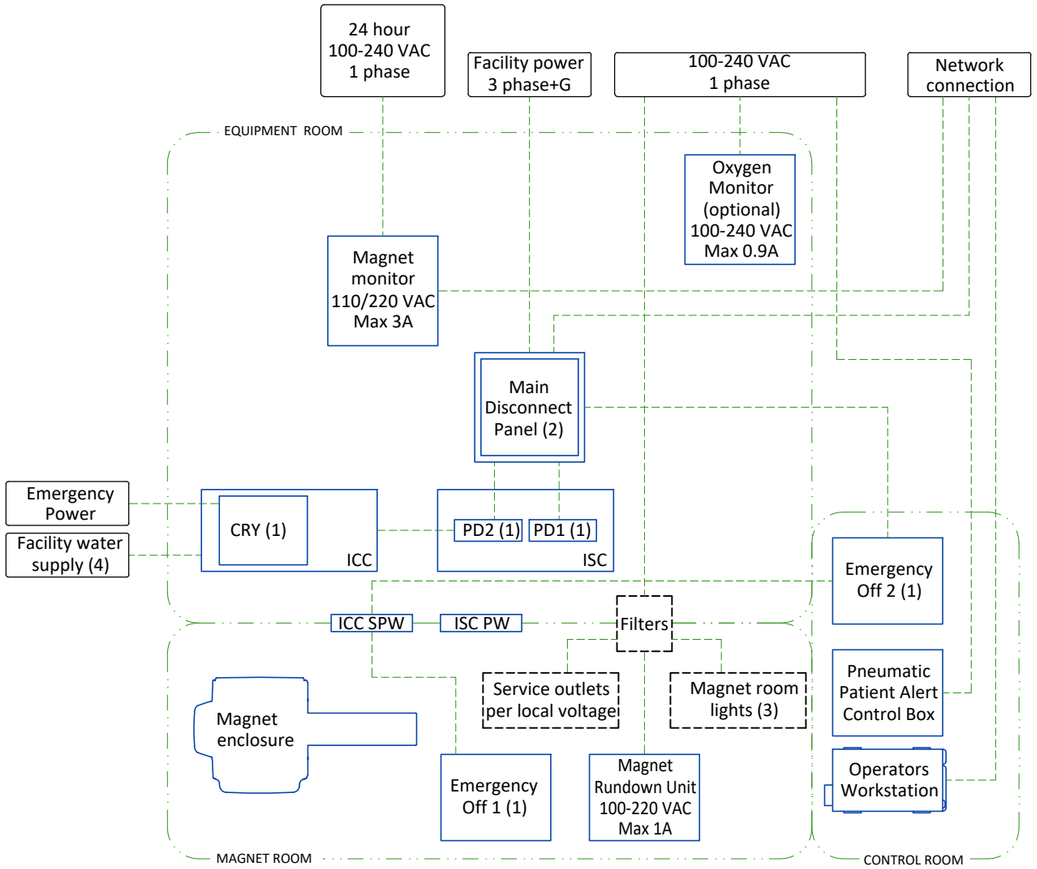

This diagram displays minimum power requirements for GE equipment and should be used as a guide to determine appropriate wire sizes per local regulatory requirements.

CRY	Cryocooler Compressor (Inside ICC)
ICC	Integrated Cooling Cabinet
ICC SPW	Integrated Cooling Cabinet Secondary Penetration Wall
ISC	Integrate System Cabinet
ISC PW	Integrate System Cabinet Penetration Wall
PD1	Gradient Power Distribution Unit (inside ISC)
PD2	System Power Distribution Unit (inside ISC)

Notes :

(1) Refer to Power Distribution detail for more information

(2) Size incoming wires from GE equipment according to conductor sizes listed on Power Distribution detail.
A network connection must be provided near the MDP to support power quality monitoring.

(3) Refer to Lighting Requirements detail

(4) This group contains water lines which shall be routed separate from electrical lines (I.E. power and signal)

- - - - - Cable SUPPLIED BY CUSTOMER
——— Equipment SUPPLIED BY GE
- - - - - Equipment SUPPLIED BY CUSTOMER

INTERCONNECTIONS

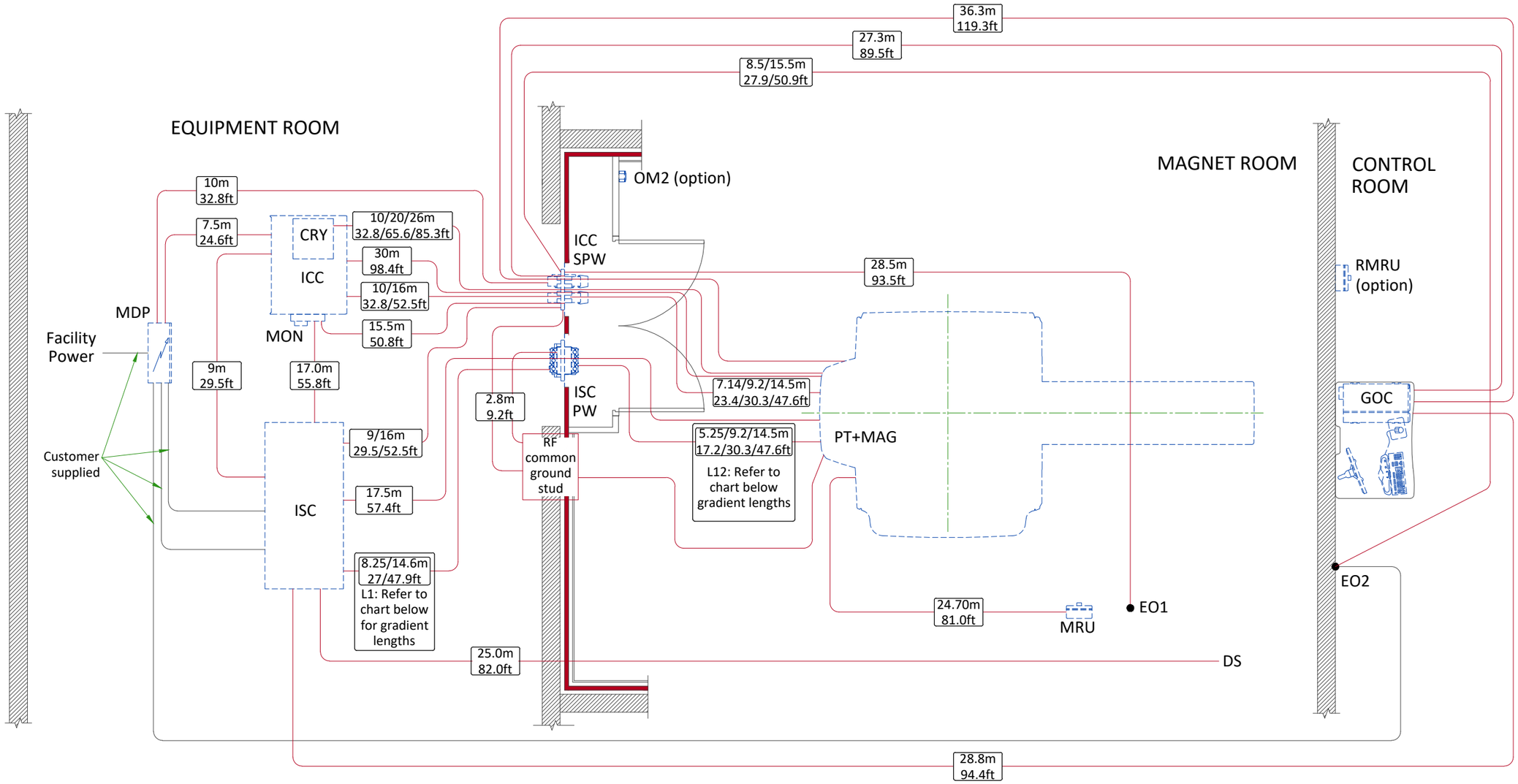

ISC-MAG GRADIENT CABLE LENGTH OPTIONS

Length Identifier	Available lengths m (ft)
L1	4.6 (15.1)
	6.6 (21.7)
	8.6 (28.3)
	10.6 (34.8)
	12.6 (41.3)
	14.6 (47.9)
L12	4.6 (15.1)
	6.6 (21.7)
	8.6 (28.3)
	10.6 (34.8)
	12.6 (41.3)
	14.6 (47.9)

CABLE ROUTING FOR ACCESSORIES

OPTION	FROM	TO	CABLE LENGTH m (ft)
Magnetic Resonance Elastograpy (MRE)	MRE	Magnet (Isocenter)	Nominal: 7.31 (24) Maximum: 10.06 (33) Extra long: 11.90 (39)
	MRE	ISC cabinet	15.24 (50)
	MRE	Ethernet Hub in ISC	15.24 (50)
	MRE	Customer Supplied Outlet	60Hz: 6.10 (20) 50Hz: 7.62 (25)
Multi-Nuclear Spectroscopy (MNS)	MNS	ISC PW	9.85 (32.3)
	MNS	ICC PW	7.85 (25.7)/14 (45.9)
	ISC PW	ICC PW	8.2 (26.9)/14.35 (47)

Order Configuration Options

Configuration	Equipment Room - site option	Magnet Room - site option
A	Short	Short
B	Long	Short
C	Short	Long