REV	DATE	MODIFICATIONS
B	22/Jul/2021	Initial release per PIM revision 2
A	16/Feb/2021	Initial release per PIM revision 1

Typical

---

01 - C1 - Cover Sheet
02 - C2 - Disclaimer - Site Readiness
03 - A1 - General Notes
04 - A2 - Equipment Layout
05 - A3 - Movement Layout
06 - A4- Section Views
07 - A5 - Equipment Details (1)
08 - A6 - Equipment Details (2)
09 - A7 - Delivery
10 - S1 - Structural Notes
11 - S2 - Structural Layout
12 - S3 - Structural Details (1)
13 - S4 - Structural Details (2)
14 - S5 - Structural Details (3)
15 - S6 - Structural Details (4)
16 - M1 - HVAC
17 - E1 - Electrical Notes
18 - E2 - Electrical Layout
19 - E3 - Electrical Elevations
20 - E4 - Electrical Details
21 - E5 - Power Requirements
22 - E6 - Interconnections
23 - E7 - Light Signaling
24 - E8 - Light Signaling (2)

A mandatory component of this drawing set is the GE Healthcare Pre Installation manual. Failure to reference the Pre Installation manual will result in incomplete documentation required for site design and preparation.
Pre Installation documents for GE Healthcare products can be accessed on the web at: www.gehealthcare.com/siteplanning

GE does not take responsibility for any damages resulting from changes on drawings made by others. Errors may occur by not referring to the complete set of final issue drawing. GE cannot accept responsibility for any damage due to the partial use of GE final issue drawings, however caused. All dimensions are in millimeters unless otherwise specified. Do not scale from printed pdf files. GE accepts no responsibility or liability for defective work due to scaling from these drawings.

GE Healthcare

ALLIA IGS 7 (OR) WITH AUTORIGHT FINAL STUDY

Drawn by	Verified by	Concession	S.O. (GON)	PIM Manual	Rev
RET	JJL	-	----	5847738-8EN	2

Format	Scale	File Name	Date	Sheet
A3	1/4"=1'-0"	EN-VAS-TYP-ALLIA-IGS-7-OR-WEB.DWG	22/Jul/2021	01/24

DISCLAIMER

GENERAL SPECIFICATIONS

- GE is not responsible for the installation of developers and associated equipment, lighting, cassette trays and protective screens or derivatives not mentioned in the order.
- The final study contains recommendations for the location of GE equipment and associated devices, electrical wiring and room arrangements. When preparing the study, every effort has been made to consider every aspect of the actual equipment expected to be installed.
- The layout of the equipment offered by GE, the dimensions given for the premises, the details provided for the pre-installation work and electrical power supply are given according to the information noted during on-site study and the wishes expressed by the customer.
- The room dimensions used to create the equipment layout may originate from a previous layout and may not be accurate as they may not have been verified on site. GE cannot take any responsibility for errors due to lack of information.
- Dimensions apply to finished surfaces of the room.
- Actual configuration may differ from options presented in some typical views or tables.
- If this set of final drawings has been approved by the customer, any subsequent modification of the site must be subject to further investigation by GE about the feasibility of installing the equipment. Any reservations must be noted.
- The equipment layout indicates the placement and interconnection of the indicated equipment components. There may be local requirements that could impact the placement of these components. It remains the customer's responsibility to ensure that the site and final equipment placement complies with all applicable local requirements.
- All work required to install GE equipment must be carried out in compliance with the building regulations and the safety standards of legal force in the country concerned.
- These drawings are not to be used for actual construction purposes. The company cannot take responsibility for any damage resulting therefrom.

CUSTOMER RESPONSIBILITIES

- It is the responsibility of the customer to prepare the site in accordance with the specifications stated in the final study. A detailed site readiness checklist is provided by GE. It is the responsibility of the customer to ensure all requirements are fulfilled and that the site conforms to all specifications defined in the checklist and final study. The GE Project Manager of Installation (PMI) will work in cooperation with the customer to follow up and ensure that actions in the checklist are complete, and if necessary, will aid in the rescheduling of the delivery and installation date.
- Prior to installation, a structrual engineer of record must ensure that the floor and ceiling is designed in such a way that the loads of the installed system can be securely borne and transferred. The layout of additional structural elements, dimensioning and the selection of appropriate installation methods are the sole responsibility of the structural engineer. Execution of load bearing structures supporting equipment on the ceiling, floor or walls are the customer's responsibility.

RADIO-PROTECTION

- Suitable radiological protection must be determined by a qualified radiological physicist in conformation with local regulations. GE does not take responsibility for the specification or provision of radio-protection.

ALL DETAILS OF EQUIPMENT AND TECHNICAL DATA ARE SUBJECT TO CHANGE.

THE UNDERSIGNED, HEREBY CERTIFIES THAT I HAVE READ AND APPROVED THE PLANS IN THIS DOCUMENT.		
DATE	NAME	SIGNATURE

GLOBAL SITE READINESS CHECKLIST (DI)

DOC1809666 Rev. 7

Site Ready Checks at Installation
EHS Site Requirements
Overall access route to the scan room free from obstruction / high hazards.
Enough space to store tools, equipment, parts, install waste and the general area free from obstruction and trip hazards.
Enough necessary facilities for the GE employees available.
No 3rd parties working in the area that may affect the safety of the installation activity.
Area free from any chemical, gas, dust, welding fume exposure and has painting been completed and dry.
All emergency routes identified, signed and clear from obstruction.
Accessible single source lockable panel that LOTO can be applied to for GE equipment installation (MDP and/or PDU).
There are no other conditions or hazards that you have observed or have been made aware of by the customer or contractors on site.
Required for Mechanical Install start
Room dimensions, including ceiling height, for all Exam, Equipment/Technical & Control rooms meets GE specifications.
Ceiling support structure, if indicated on the GE drawing, is in the correct location and at the correct height according to the Original Equipment Manufacturer specifications.
Levelness and spacing has been measured, and is ready for the installation of any GE supplied components.
Overhead support Structure (unistrut) has been confirmed with customer/contractor to meet required GE provided criteria.
Finished ceiling is installed. If applicable ceiling tiles installed per PMI discretion.
Floor levelness/flatness is measured and within tolerance, and there are no visible defects per GEHC specifications.
Entry door threshold meets PIM requirement
Floor Strength and thickness have been discussed with customer/contractor and they have confirmed GE requirements are met.
Rooms that will contain equipment, including staging areas if applicable, are construction debris free. Precautions must be taken to prevent debris from entering rooms containing equipment.
Cable ways (floor/wall/ceiling/Access Flooring) are available for installation of GE cables are of correct length and diameter.
Cable ways routes per GE Final drawings and cable access openings areas installed at a time determined by GEHC PM. Surface floor duct can be installed at time of system installation.
Adequate room illumination installed and working.
Customer supplied countertops where GE equipment will be installed are in place.
Vascular baseplates preparation complete per GE requirements.
For IGS 730/740: Floor finish is according to the GE Specifications and protection is installed . Specifications for concrete substrate & Monopur 7 mm flooring have been met. Table baseplate installed and flush to the finished floor.
For IGS 730/740: Room Interventional Reference Point (RIRP) value has been defined with the customer. Either 1120mm, 1278 mm or 1508 mm.
Ensure that all third party suppliers are identified and have been informed about the project dates and how they need to proceed in accordance with their needs for interfacing to our equipment.
Required for Calibration start
HVAC systems Installed, and the site meets minimum environmental operational system requirements.
System power & grounding (PDB/MDP) is available as per GE specifications.
System power & grounding (PDB/MDP) is installed at point of final connection and ready to use. Lock Out Tag Out is available.
PMI to confirm all feeder wires and breaker are size appropriately. EPO installed if needed.
PMI to confirm with electrician all power and signal cables are well terminated ensuring there are no loose connections.
Network outlets installed.
Computer network available and working.
Lead doors and windows complete or scheduled to be installed. If applicable, radiation protection (shielding) finished & radioprotection regulatory approval for installation obtained.

Note: The details shown here are only an extract from DOC1809666. For the complete document please contact your PMI.

CONNECTIVITY REQUIREMENTS

Service Connectivity for new systems will be based on the Insite-RSvP Platform which allows to configure a direct Internet connection to the RSvP Server (routers/VPN tunnel no more mandatory). Communication with the RSvP server will be outbound only and require using Transport Layer Security (TLS) over TCP port 443. This is commonly known as an HTTPS (HTTP-Secure) connection.

There will be several ways to connect the system to the RSvP Enterprise Server. See below the main options that might not be all available or authorized at your site depending on actual network constraints or local regulations.:

- The system allows for DNS configuration or proxy server-based connection to the Internet.
- Connection thru a GE Proxy will be possible in the future.
- In the case the customer does not accept the above connection protocol or regulatory reasons prevent using these types of configurations, the local/regional connectivity teams can provide help to connect through SSL/TLS proxy IP over the site-to-site VPN.

To make the system connectivity operational before the system installation is finished, ensure the connectivity solution is defined as early as possible during the pre-installation process and proper information are exchanged between the customer Network Administrators and GEHC Sales and/or Service representatives.

For more information please refer to the latest version of the Pre Installation Manual.

ELECTROMAGNETIC INTERFERENCE

The IGS System is intended for use in the electromagnetic environment specified below.
The Customer or the user of the System should assure that it is used in such an environment.

EMISSIONS	TEST COMPLIANCE	ELECTROMAGNETIC ENVIRONMENT
Radio–Frequency Emissions CISPR11	Group1 Class A limits	The IGS System uses Radio Frequency energy only for its internal function.Therefore, its Radio Frequency emissions are very low and are not likely to cause any interference in nearby electronic equipment.
		The IGS System is suitable for use in all establishments other than domestic and those directly connected to the public low-voltage power supply network that supplies buildings used for domestic purposes.
Harmonic emissions IEC 61000–3–2	Not applicable	The IGS System is suitable for use in all establishments other than domestic and those directly connected to the public low-voltage power supply network that supplies buildings used for domestic purposes.
Voltage fluctuations/ flicker emissions IEC 61000–3–3	Not applicable	The IGS System is suitable for use in all establishments other than domestic and those directly connected to the public low-voltage power supply network that supplies buildings used for domestic purposes.

CUSTOMER SITE READINESS REQUIREMENTS

- Any deviation from these drawings must be communicated in writing to and reviewed by your local GE healthcare installation project manager prior to making changes.
- Make arrangements for any rigging, special handling, or facility modifications that must be made to deliver the equipment to the installation site. If desired, your local GE healthcare installation project manager can supply a reference list of rigging contractors.
- New construction requires the following;
  1. Secure area for equipment,
  2. Power for drills and other test equipment,
  3. Capability for image analysis,
  4. Restrooms.
- Provide for refuse removal and disposal (e.g. crates, cartons, packing)
- For CT, MR, PET/CT, and SPECT systems it is required to minimize vibrations within the scan room. It is the customer's responsibility to contract a vibration consultant/engineer to implement site design modifications to meet the GE vibration specification. Refer to the system preinstallation manual for vibration specifications.

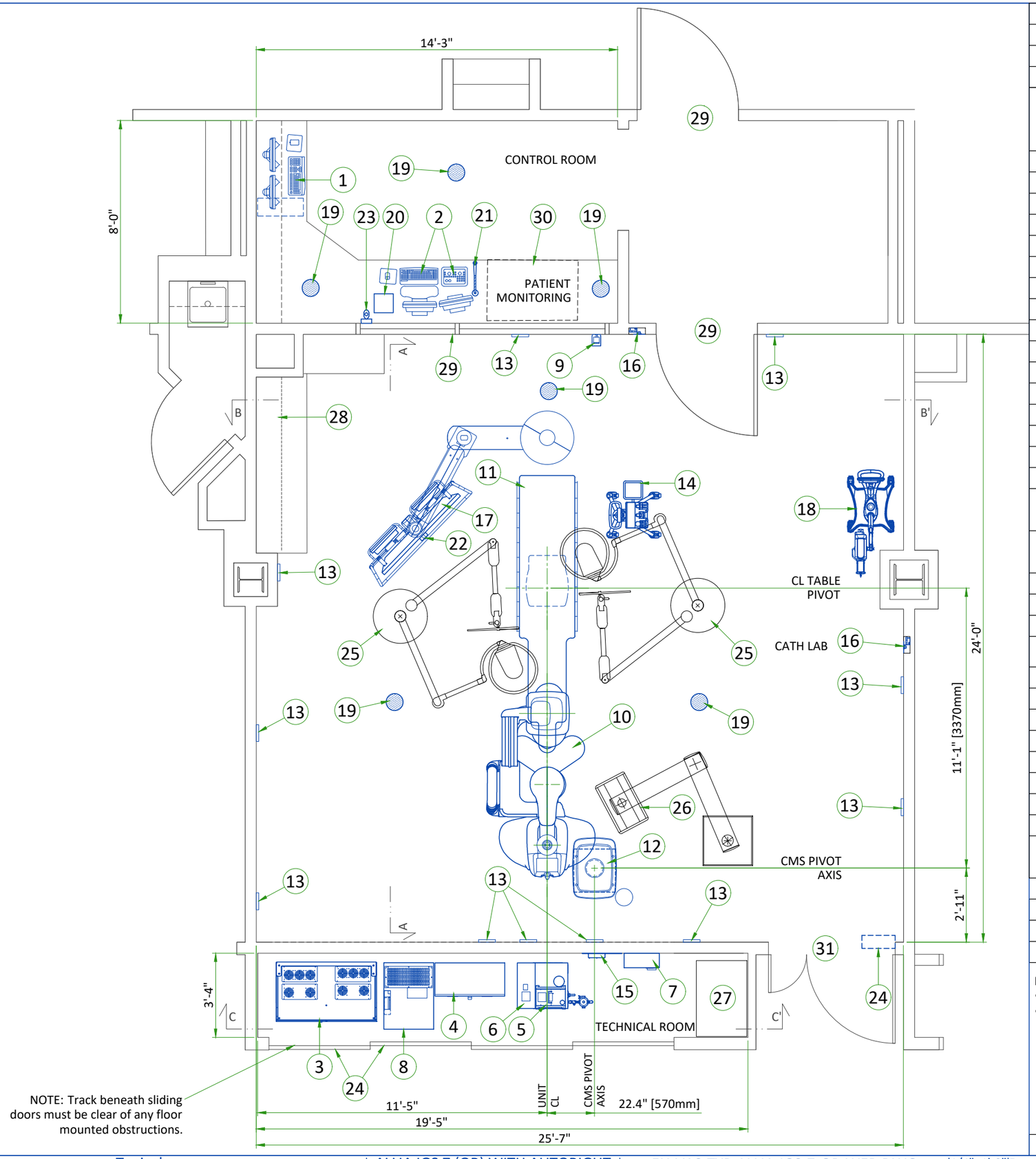

LEGEND			
A	GE Supplied	D	Available from GE
B	GE Supplied/contractor installed	E	Equipment existing in room
C	Customer/contractor supplied and installed	*	Item to be reinstalled from another site

BY	ITEM	DESCRIPTION	MAX HEAT OUTPUT (btu)	WEIGHT (lbs)	MAX HEAT OUTPUT (W)	WEIGHT (kg)
A/D	1	Advantage workstation	2019	22	590	10
A	2	Operator console	341	19.6	100	9
A	3	C-FRT Cabinet	7370	1230	2160	558
A	4	System Interface Cabinet (PDU)	1365	628	400	285
A	5	Detector conditioner	717	32	210	14.5
A	6	COOLIX 4100 tube chiller	23646	265	6930	120
D	7	Main disconnect panel (MDP)	-	49	-	22
D	8	20kVA Fluoro UPS UL	6756	1169	1980	530
A	9	Xray buzzer	-	1	-	0.5
A	10	Gantry	5528	2204	1620	1000
A	11	Tilting table	-	2242	-	1017
A	12	Cable management system (CMS)	-	-	-	-
A	13	Positioning targets (x11)	-	-	-	-
A	14	IGS Control Center	-	-	-	-
A	15	I-Box	-	-	-	-
A	16	I-Point (x2)	-	-	-	-
A/D	17	Mavig Large Display Monitor Suspension with two backup monitors	341	688	100	312
D	18	Injector on pedestal with control and electronics	-	146	-	66
B/D	19	Vitalinq speaker	-	-	-	-
B/D	20	Vitalinq console	-	-	-	-
B/D	21	Vitalinq microphone	-	-	-	-
B/D	22	Vitalinq microphone (one on monitor bridge in exam room)	-	-	-	-
A/D	23	Bolus chase handswitch	-	2	-	1
D	24	Light signaling control box	-	-	-	-
C	25	Vendor boom with rad shield and lamp (customer supplied)				
C	26	Vendor equipment boom (customer supplied)				
C	27	Storage cabinet				
C	28	Counter top with base and wall cabinets				
C	29	Control wall to ceiling with lead glass viewing window.				
C	30	Counter top for equipment- provide grommeted openings as required to route cables				
C	31	Minimum door opening for equipment delivery is 50.4 in. w x 87 in. h [1280mm x 2200mm], contingent on a 96 in. [2438mm] corridor width				

EXAM ROOM HEIGHT	
FINISHED FLOOR TO SLAB HEIGHT	T.B.D.
FALSE CEILING HEIGHT	10'-0"

Note:
- Reflectors to be located above cabinet top; minimum height from finished floor 80.7" [2.05m]
- Ensure the surfaces to be non-reflective and non-mobile for the positioning targets

For Accessory Sales: (866) 281-7545 Options 1, 2, 1, 2 or mail to: gehcaccessorysales@ge.com

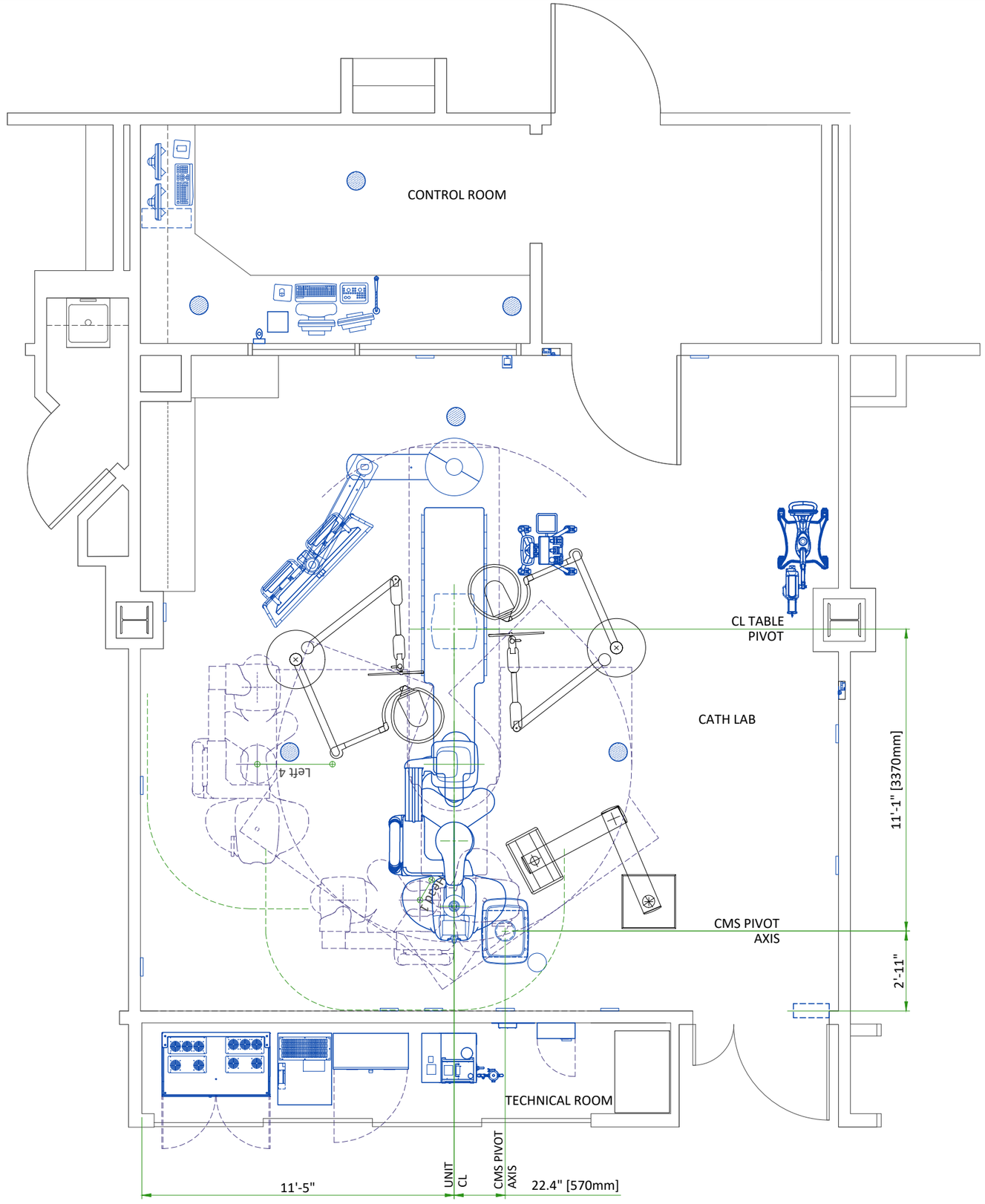

MOVEMENT LAYOUT

PARKING POSITIONS

NAME	RIRP* 1508		FEASIBLE DISTANCE	PROPOSED
	min	max		
Park Head 1	500	3930		YES
Park Left 2	500	4080		
Park Left 3	500	2690		
Park Left 4	500	1340		YES
Park Right 2	500	3680		
Park Right 3	500	3140		
Park Right 4	500	2490		

A maximum of two parking positions can be selected.

BACKOUT POSITIONS

TYPE	NAME	RIRP* 1508		TYPICAL
		min	max	
Backouts	**Head Long**	500	4310	1200
	Head Left	500	2700	2700
	Head Right	500	3600	2700
	Left Lat	500	1400	900
	Left Feet	500	1100	900
	Left 1	500	4310	1200
	Right Lat	500	2400	900
	Right Feet	500	2100	900
	Right 1	500	4310	1200
Arm backouts	**Left Inter**	500	3500	-
	Right Inter	500	800	-
	Left Swivel	500	900	-
	Right Swivel	500	1700	-

* RIRP: Room Interventional Reference Point

EXAM ROOM VIEW

SECTION A-A'

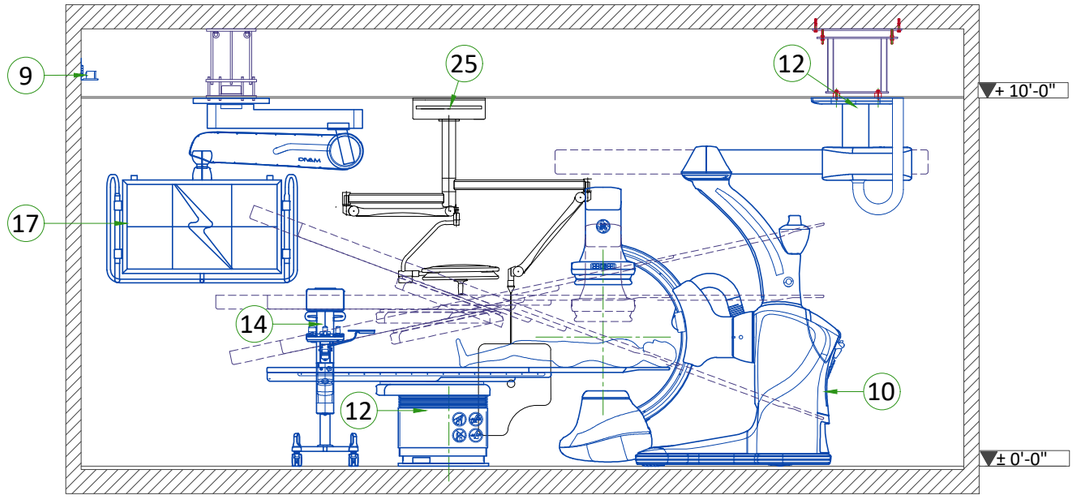

TECHNICAL ROOM VIEW

SECTION C-C'

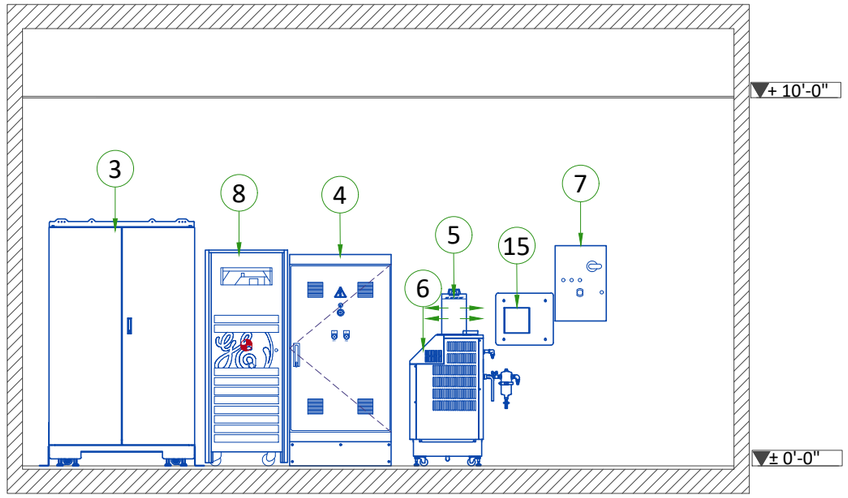

EXAM ROOM VIEW

SECTION B-B'

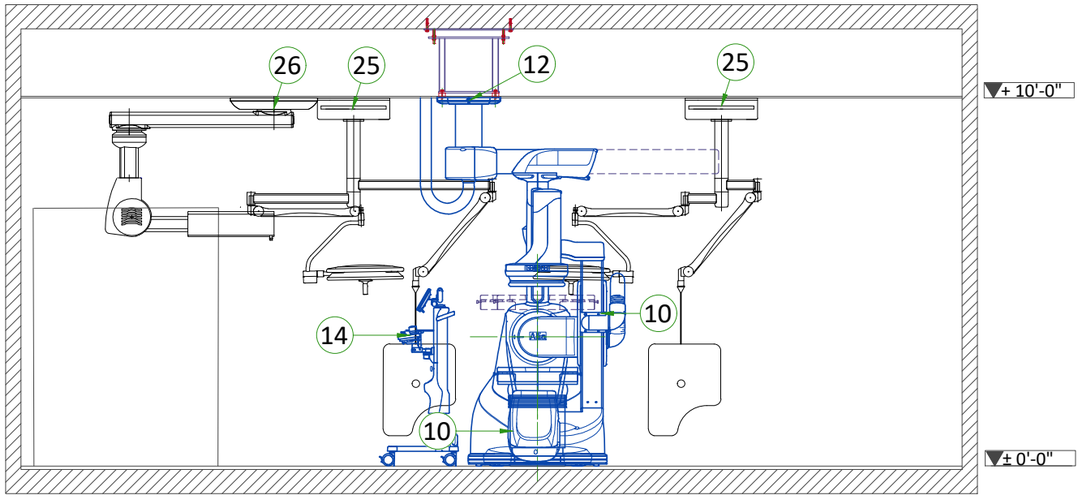

20kVA FLURO UPS

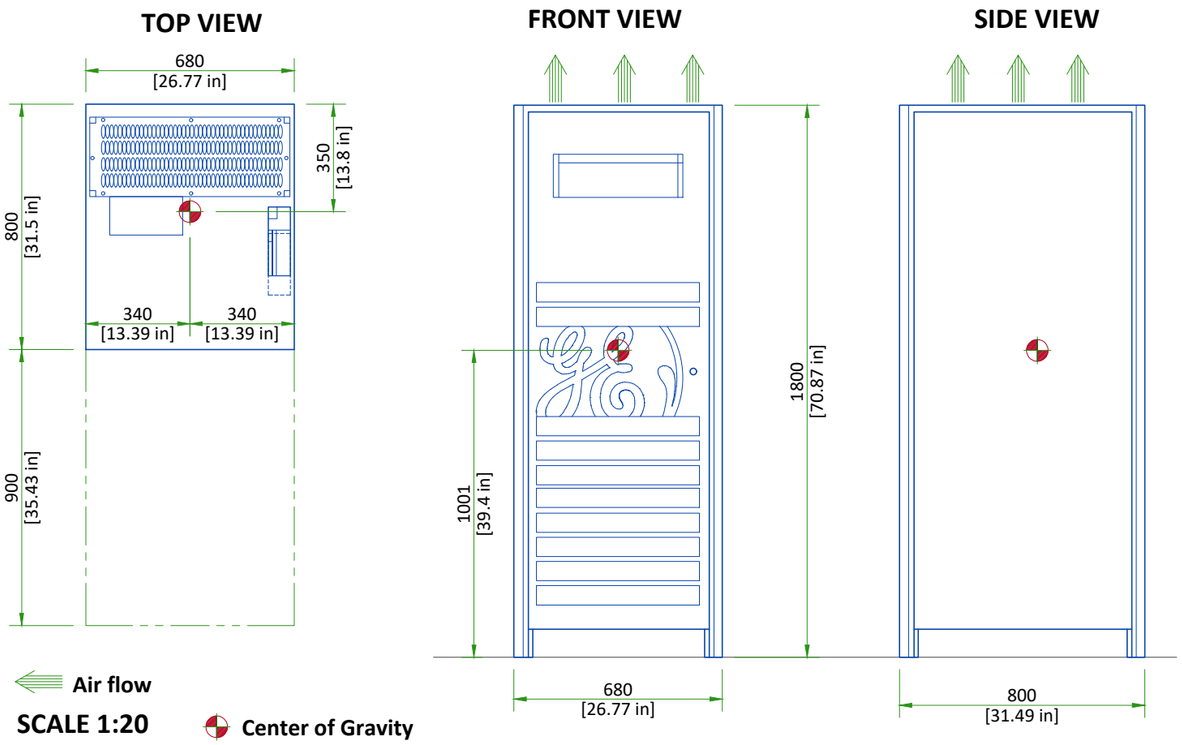

SCALE 1:20

C-FRT CABINET

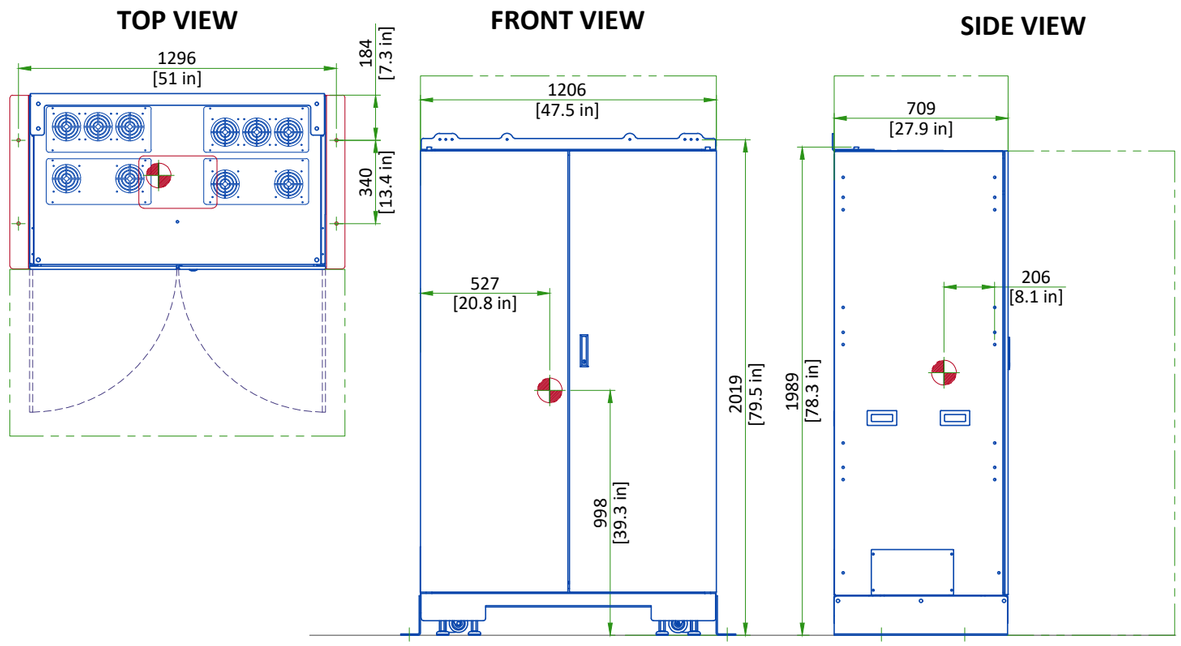

Center of Gravity

SCALE 1:25

DETECTOR CONDITIONER

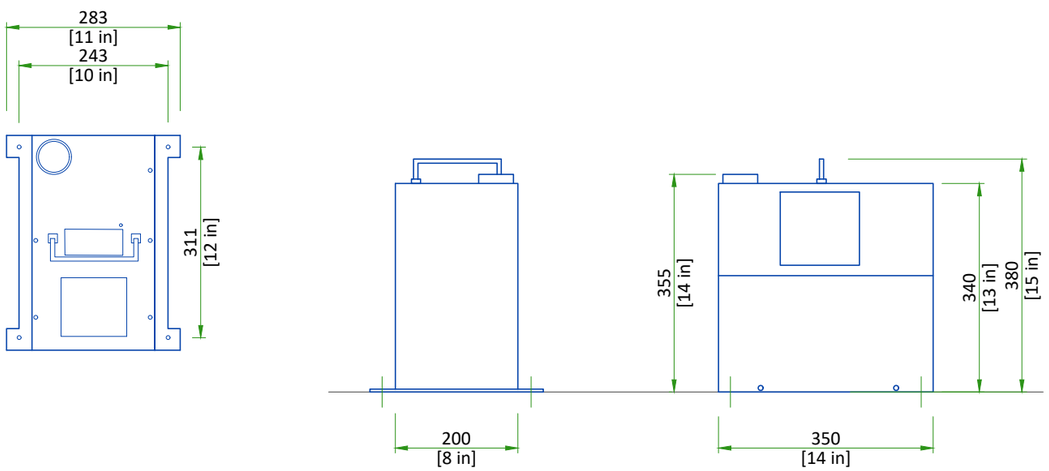

Scale 1:10

X-RAY TUBE CHILLER

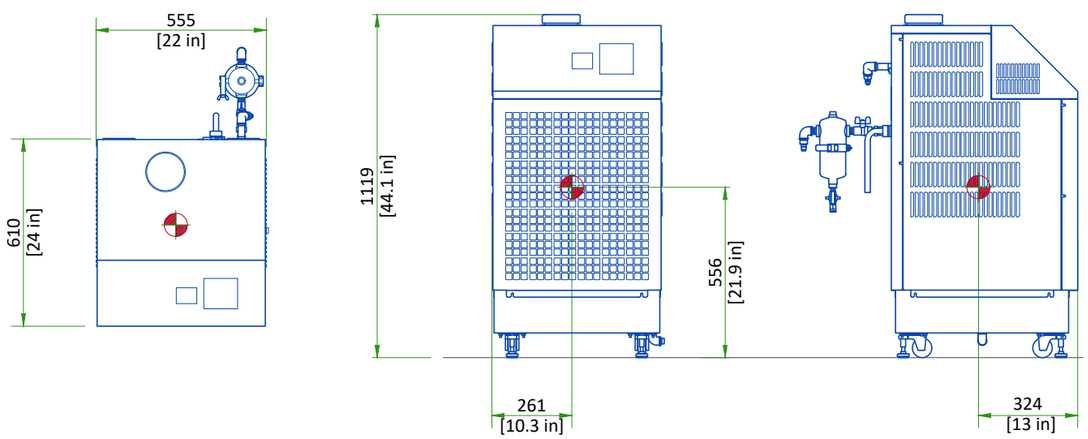

Center of Gravity

Scale 1:20

MAIN DISCONNECT PANEL

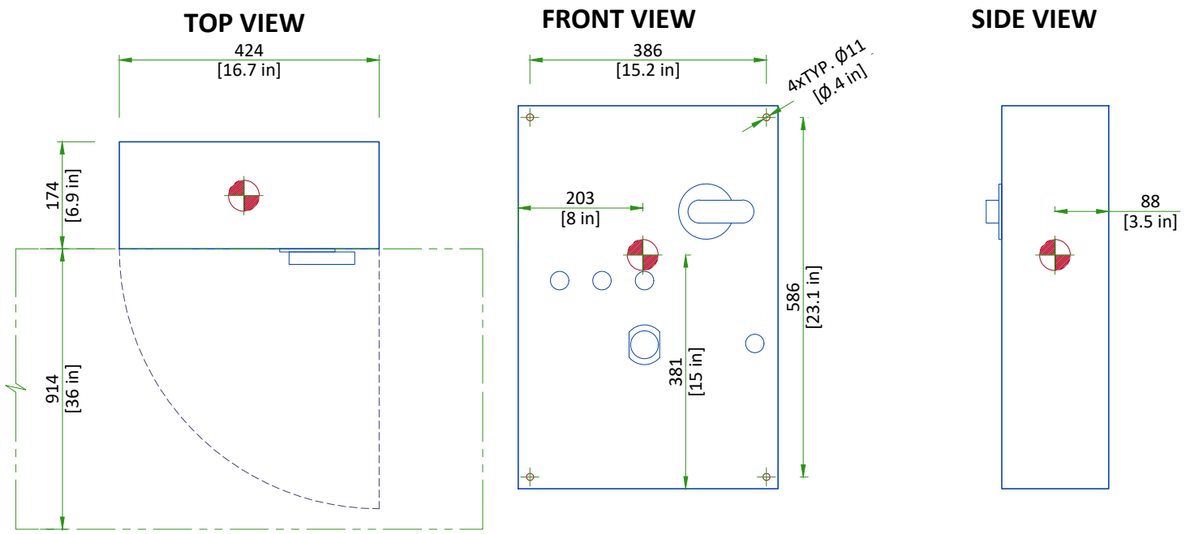

Center of Gravity

Scale 1:10

PATIENT TABLE

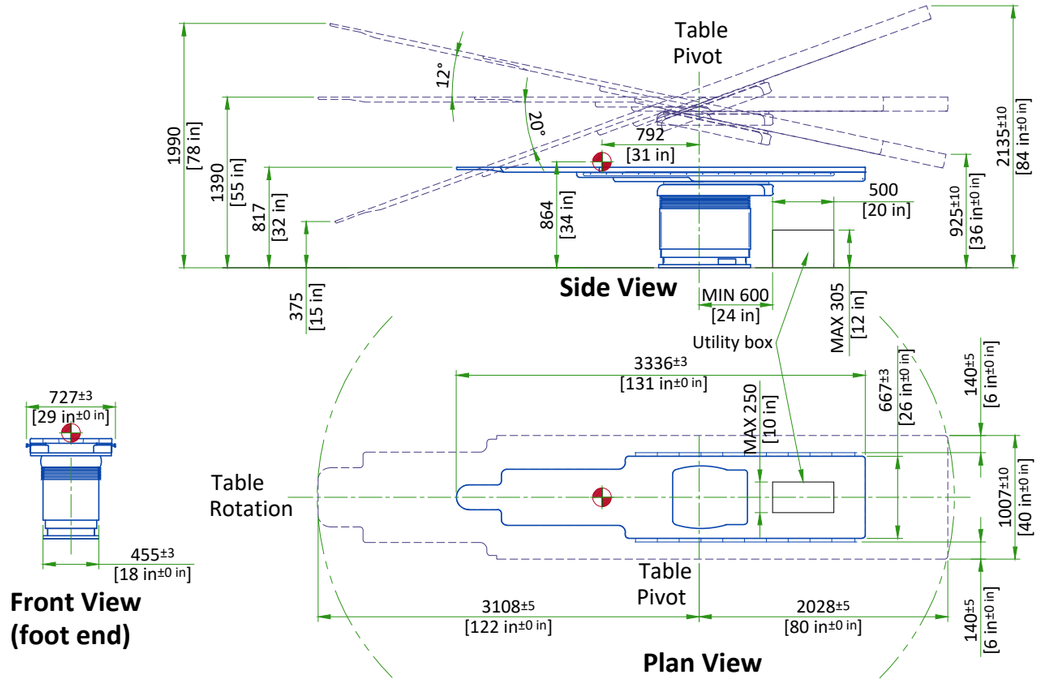

Center of Gravity

Scale 1:50

The Utility box under the table is not recommended for the surgical configuration.
It is forbidden to place or install objects under the head end of the table that could interfere with AGV motion.

NPA PDU

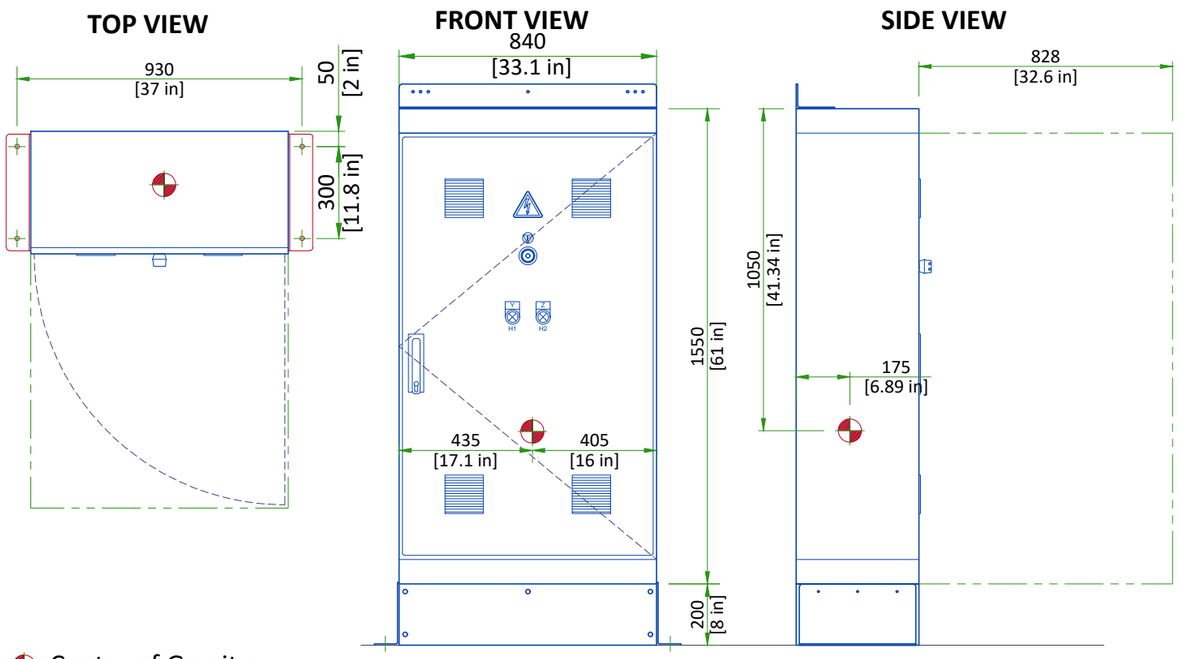

Center of Gravity

Scale 1:20

DELIVERY

THE CUSTOMER/CONTRACTOR SHOULD:

- Provide an area adjacent to the installation site for delivery and unloading of the GE equipment.
- Ensure that the dimensions of all doors, corridors, ceiling heights are sufficient to accommodate the movement of GE equipment from the delivery area into the definitive installation room.
- Ensure that access routes for equipment will accommodate the weights of the equipment and any transportation, lifting and rigging equipment.
- Ensure that all necessary arrangements for stopping and unloading on public or private property not belonging to the customer have been made.

DIMENSIONS OF DELIVERY

EQUIPMENT	DIMENSIONS			WEIGHT	
GANTRY (SHIPPING DOLLY) (TBC)	LENGTH	2890 mm	113.7 in	1100 kg	2425 lb
	WIDTH	1410 mm	55.5 in		
	HEIGHT	2060 mm	81.1 in		
TILTING TABLE (ON PALLET)	LENGTH	2150 mm	84.6 in	700 kg	1534 lb
	WIDTH	1000 mm	39.4 in		
	HEIGHT	1160 mm	45.7 in		
CMS PALLET ASSEMBLY (WITHOUT SHIPMENT PACKAGING)	LENGTH	1812 mm	71.3 in	-	-
	WIDTH	923 mm	36.3 in		
	HEIGHT	1465 mm	57.7 in		
C-FRT CABINET (ON PALLET)	LENGTH	850 mm	34 in	632 kg	1393 lb
	WIDTH	1500 mm	59 in		
	HEIGHT	2200 mm	87 in		

RECOMMENDED AREA IN THE TECHNICAL ROOM

THE TECHNICAL ROOM NEED EXTRA SPACE FOR TOOLS AND DOCUMENTATION

- GE recommend an extra area of 2.0 x 1.0 m (78.7 x 39.4 in) for storage of tools and documentation for the system
- This area doesn't need to be inside the technical room, but in a closer space from the system

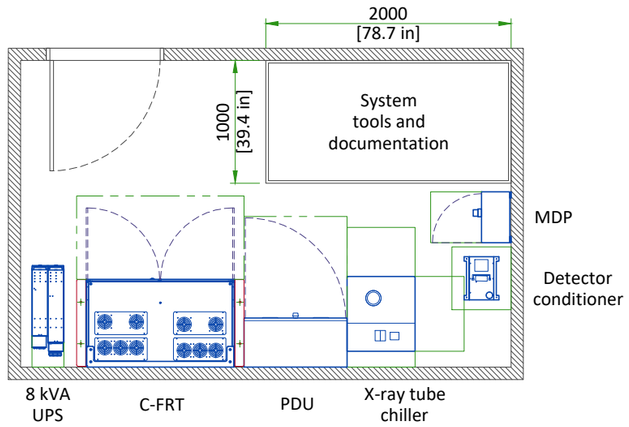

SHIPPING DOLLY FOR DISCOVERY GANTRY

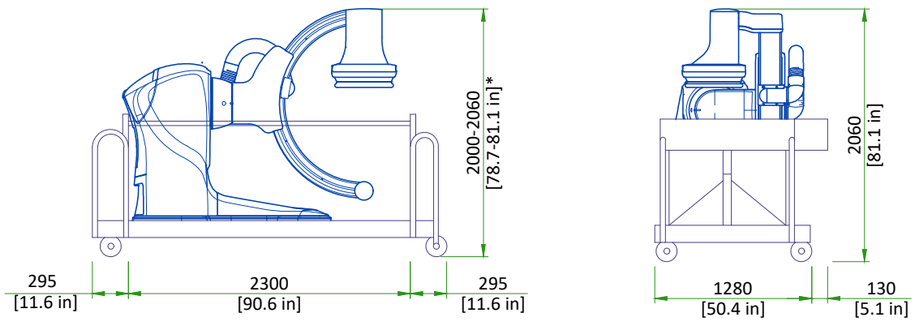

DIMENSIONS

	HEIGHT	WIDTH	LENGTH
Full configuration	2000-2060 mm [78.7-81.1 in]*	1410 mm [55.5 in]	2890 mm [113.7 in]
Left top handle removed and right top handle inside	2000-2060 mm [78.7-81.1 in]*	1280 mm [50.4 in]	2890 mm [113.7 in]
Short lifts configuration	2250 mm [83.5 in]	1280 mm [50.4 in]	2300 mm [90.5 in]
No dolly configuration	2000 mm [78.7 in]	1260 mm [49.6 in]	2150 mm [84.6 in]
NOTE	Dolly can be removed to facilitate movement of Discovery gantry in the hospital only. However, if moving the gantry without shipping dolly, there is a risk of damaging the floor surface. *Height can be adjusted: ONLY when necessary on delivery path and IF floor rolling surface is flat and levelled (no obstacle), it means dolly horizontal bars are at 80 mm from floor surface, to prevent any damage on AGV gantry wheels.		

POSITIONING TARGETS

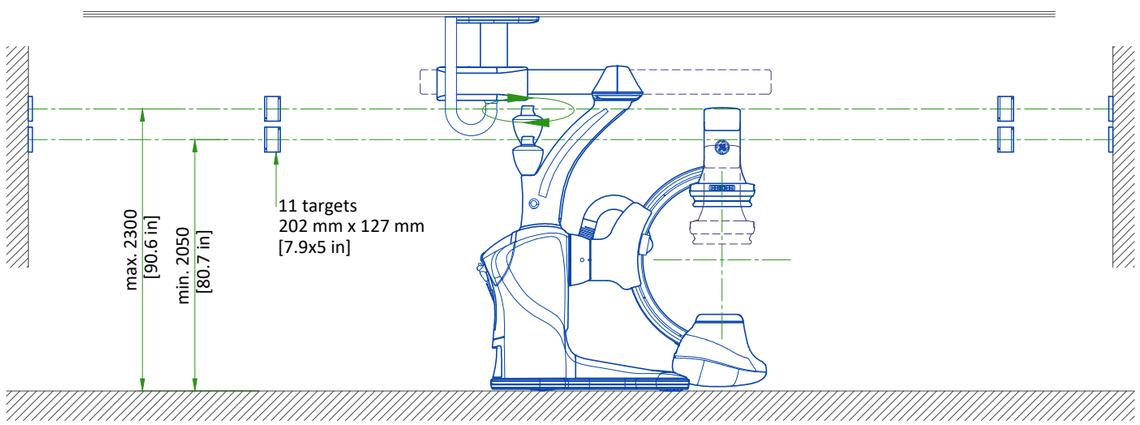

NOTE
The minimum distance between two targets is 400 mm [15.7 in] center to center.
The maximum angle between two adjacent targets is 70°.
The targets are mounted at the time of the gantry installation.
Targets should be visible to the laser source of the AGV:

- Shouldn't be mounted on movable surface (door, window, etc.).
- Shouldn't be mounted on a surface that could be hidden in operation by door or movable component.
- Shouldn't be mounted on or near a reflective surface.

STRUCTURAL NOTES

- All steel work and parts necessary to support ceiling mounted tube hanger or other equipment are to be supplied by the customer or his contractors. The structural support should run continuous with no fittings extending below face of structural support channel, run wall to wall, be parallel, square and in the same horizontal plane flush with finished ceiling. The system is to be cross braced vertically, horizontally and diagonally to allow no movement and a maximum of 1,58mm (1/16") deflection. 12,7mm (1/2") dia. X 38,1mm (1 1/2") long bolts with unistrut 12,7mm (1/2") nuts with springs are to be provided by customer or his contractors for each stationary and auxillary support rail. Closure strips shall be provided for areas of unistrut exposed and without mounting units.
- Methods of support for the steelwork that will permit attachment to structural steel or through bolts in concrete construction should be favored. Do not use concrete or masonry anchors in direct tension.
- All units that are wall mounted or wall supported are to be provided with supports where necessary. Wall supports are to be supplied and installed by the customer or his contractors. See plan and detail sheets for suggested locations and mounting hole locations.
- All ceiling mounted fixtures, air vents, sprinklers, etc. To be flush mounted, or shall not extend more than 6,35mm (1/4") below the finished ceiling.
- Control walls with tube hanger passage above shall be constructed to 2130mm (7'-0") high.
- Floor slabs on which equipment is to be installed must be level to 3,17mm (1/8") in 3050mm (10'-0")
- Dimensions are to finished surfaces of room.
- Customers contractor must provide all penetrations in post tension floors.
- Customers contractor must provide and install any non-standard anchoring. Documents for standard anchoring methods are included with GE equipment drawings for geographic areas that require such documentation.
- Customers contractor must provide and install hardware for "through the floor" anchoring and/or any bracing under access floors. This contractor must also provide floor drilling that cannot be completed because of an obstruction encountered while drilling by the GE installer such as rebar etc.
- It is the customer's responsibility to perform any floor or wall penetrations that may be required. The customer is also responsible for ensuring that no subsurface utilities (e.g., electrical or any other form of wiring, conduits, piping, duct work or structural supports (i.e. post tension cables or rebar)) will interfere or come in contact with subsurface penetration operations (e.g. drilling and installation of anchors/screws) performed during the installation process. To ensure worker safety, GE installers will perform surface penetration operations only after the customer's validation and completion of the "GE surface penetration permit"

IF ACCESS IS NOT READILY AVAILABLE IT IS RECOMMENDED TO PROVIDE A TRAPDOOR IN THE CEILING TO ALLOW SERVICE ACCESS FOR CABLE MANAGEMENT.

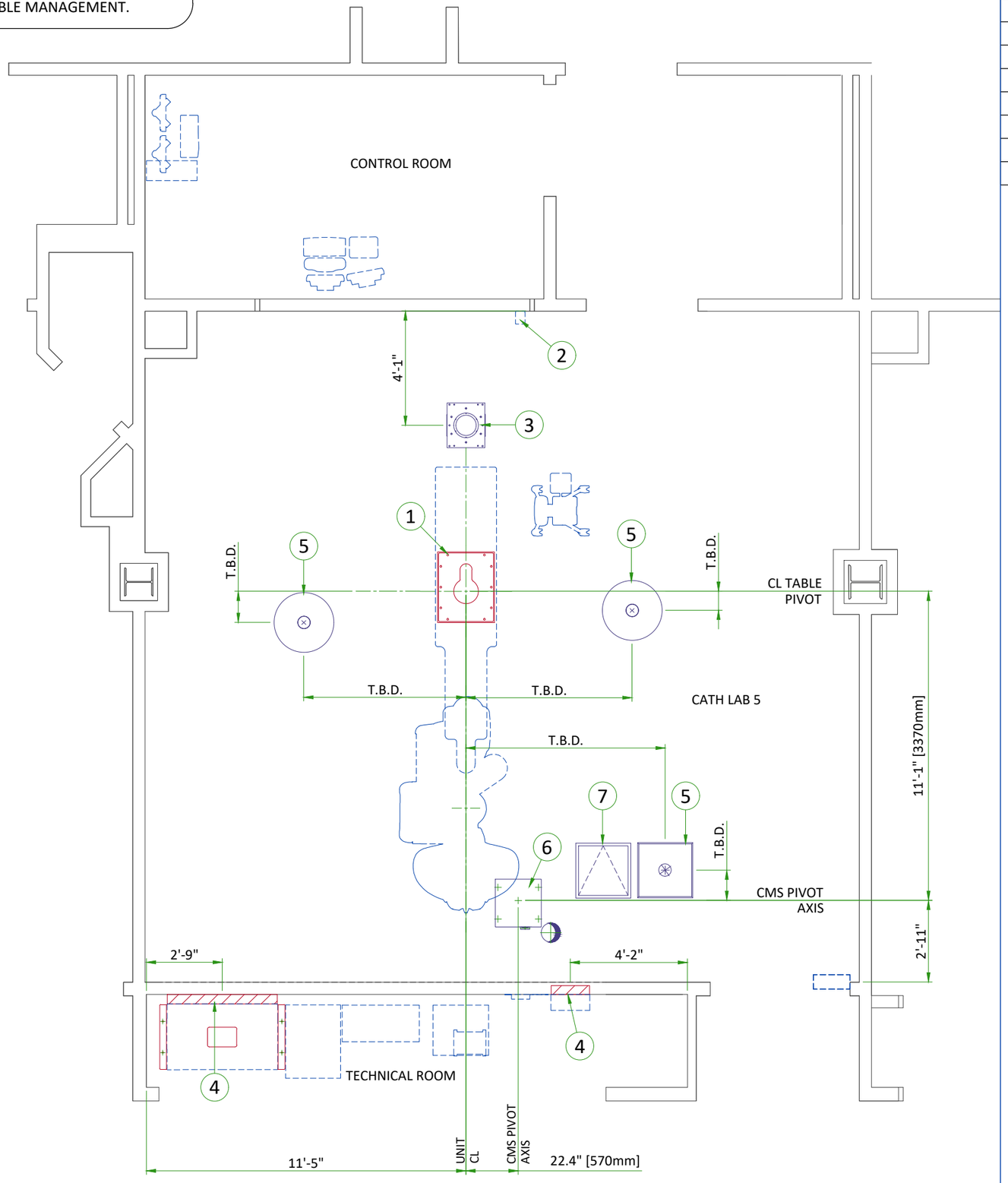

STRUCTURAL LAYOUT ITEM LIST	
(GE SUPPLIED / CONTRACTOR INSTALLED)	
1	Area occupied by GE supplied table baseplate
2	Mount X-Ray buzzer bracket on wall above ceiling
3	Large Display Monitor suspension (see page S5)
(CUSTOMER SUPPLIED / CONTRACTOR INSTALLED)	
4	Support backing, locate as shown.
5	Structural support in ceiling for vendor boom
6	Customer supplied plate (250x503 [20.5"x19.8"])
7	600 x 600 [24" x 24"] Service access in ceiling

EXAM ROOM FLOOR SPECIFICATION

IMPORTANT

The Allia IGS system is compatible with a floor in vinyl, which consists in **Self-Levelling Underlayment (SLU) + Flooring adhesive (glue) + Vinyl**

- (Bare) Floor preparation and vinyl flooring application falls under Customer's responsibility
- Application of each product (SLU, glue, vinyl sheet) must be done as per product Manufacturer's recommendations
- Finished Vinyl floor must be protected by Contractor. These protections will maintain floor integrity and allow heavy load traffic during system delivery and install
- Control reports must be provided by Contractor and archived by PMI for all Acceptance specifications listed below (This page can be used as the report)

SUBSTRATE CONCRETE/SUBFLOOR

Table 1. FLOOR ACCEPTANCE FOR SUBSTRATE (before vinyl flooring system)

Controls	Specifications	Results
PULL-OFF STRENGTH (i.e. Elcometer Adhesion tester)	**> 1.5 MPa [> 218 PSI]**	
HARDNESS (i.e. Schmidt Hammer Sclerometer)	**> 20 MPa [> 3000 PSI]**	

SLU SPECIFICATION:

- Compressive strength > 20 MPa , or Class >C20 (> 3000 PSI)

Table 2. FLOOR ACCEPTANCE FOR SLU (before vinyl application)

Controls	Specifications	Results
PULL-OFF STRENGTH (i.e. Elcometer Adhesion tester)	**> 1.5 MPa [> 218 PSI]**	
HARDNESS (i.e. Schmidt Hammer Sclerometer)	**> 20 MPa [> 3000 PSI]**	
SLU THICKNESS on the whole surface until 1m from the walls	**> 3 mm [> 1/8 in]**	
LEVELNESS on the whole surface until 1m from the walls	**< 1 mm/m [< 1/8 in over 10 ft]**	
FLATNESS on the whole surface until 1m from the walls	**< 6 mm under 2 m straightedge [< 1/4 in under 10 ft straightedge]**	

FLOORING ADHESIVE:

- It must be one of those recommended by the Vinyl manufacturer for heavy load (ie hospital beds, heavy traffic)
- For conductive floor (if required by Customer), copper strips can be added In this layer, they should not cross Allia IGS traffic area – for example, they can be located close to the walls

Optional measurement	Records
Conductivity	

VINYL:

- Seams processed as per Manufacturer recommendations
- No specific requirement on seams position
- Avoid seams as much as possible in gantry movement area
- DOC2499483 - List of Vinyl products compatible with Allia™ IGS system. Latest version of this list is available on Customer Documentation Portal: *www.gehealthcare.com/documentationlibrary*

Vinyl reference used :

- ☐ Medintone (Armstrong)
- ☐ Biospec MD (Mannington)
- ☐ IQ Toro (Tarkett)
- ☐ IQ Optima (Tarkett)
- ☐ Acczent Excellence 4 (Tarkett)
- ☐ Mipolam Elegance EL 5 (Gerflor)

(either conductive or static-dissipative references)

References of all materials used :

• Primer for SLU	
• SLU	
• Glue	

GANTRY WEIGHT

COMPONENT	NET WEIGHT		LOAD BEARING AREA	WEIGHT/OCCUPIED AREA
GANTRY	TOTAL WEIGHT (IGS 730)	990 kg [2183 lb]	1 m² [10.76 ft²]	990 kg/m² [202.7 lb/ft²]
	TOTAL WEIGHT (IGS 740)	1000 kg [2205 lb]	1 m² [10.76 ft²]	1000 kg/m² [204.8 lb/ft²]
	REAR MAX ISOLATED LOAD	400 kg [882 lb]	640 mm² [0.99 in²]	5.5 MPa [798 lb/in²]
	FRONT MAX ISOLATED LOAD	340 kg [750 lb]	135 mm² [0.21 in²]	8.1 MPa [1175 lb/in²]

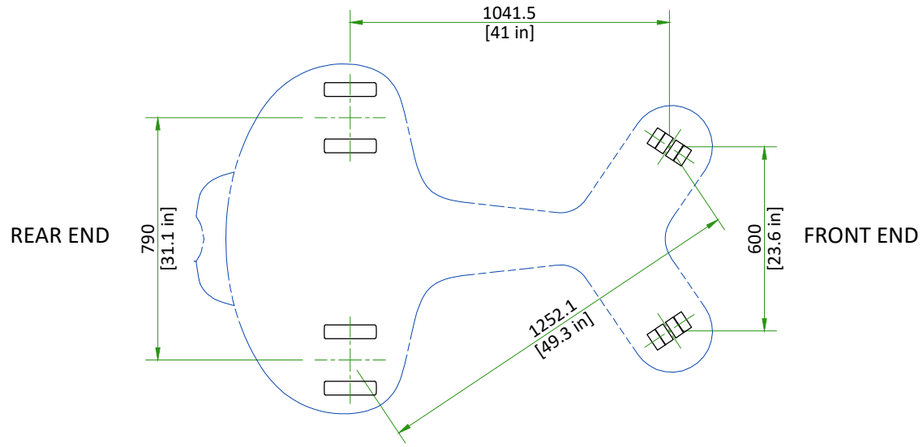

CMS STRUCTURAL SUPPORT PLATE INFORMATION

IMPORTANT NOTE: CUSTOMER/CONTRACTOR INSTALLED AND DESIGNED BY STRUCTURAL ENGINEER
- FIRE DETECTION, LIGHTING, VENTILATION, ETC. NOT TO EXCEED FINISHED CEILING
- EACH MOUNTING BOLT MUST NOT "PULL OUT" OR OTHERWISE FAIL UNDER A VERTICALLY DOWNWARD DEAD LOAD OF 635daN

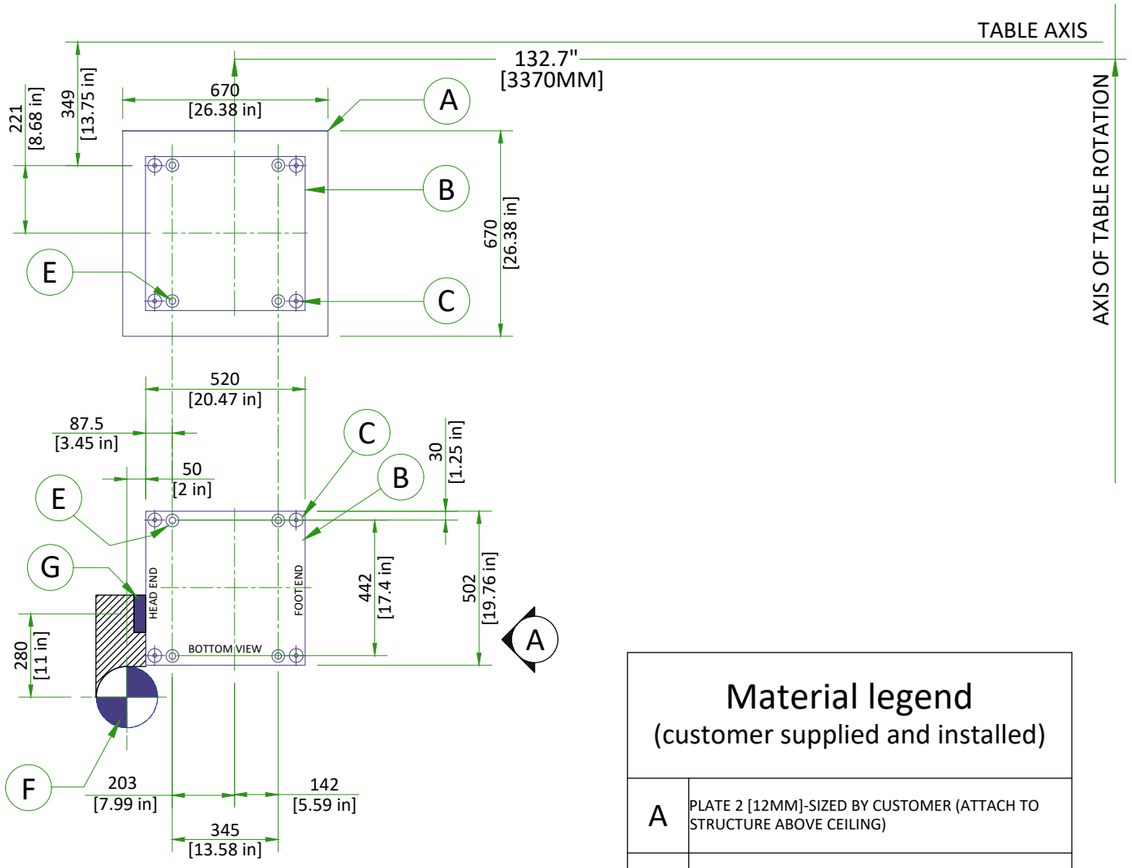

Material legend
(customer supplied and installed)

A	PLATE 2 [12MM]-SIZED BY CUSTOMER (ATTACH TO STRUCTURE ABOVE CEILING)
B	PLATE 1 [12MM] 20.5" (520MM) x 19.8" [502MM]
C	HARDENED THREADED RODS [50x50MM] (WELD & GRIND FLUSH TO BOTTOM PLATE 1) (DOUBLE NUT ADJUSTABLE TO PLATE 2)
D	ACCESS PANEL - 24" x 24" [600x600MM]
E	ANCHORED BY (4) M12 GRADE 8.8 BOLTS or ANCHORED BY (4) 1/2" GRADE 5 BOLTS (8) NORD WASHERS (8) NYLOC NUTS ●MAX. AXIAL EFFORT 153daN ●MAX. SHEAR FORCE 125daN
F	8.5" [210MM] DIA. OPENING IN FALSE CEILING (CABLE ACCESS, KEEP CLEAR NO OBSTRUCTIONS)
G	4" [100MM] x 1" [25MM] OPENING (FOR CABLE GUIDE BRACKET IN FALSE CEILING)

DETAIL NOT TO SCALE

CMS ELEVATION SUPPORT STRUCTURE

ELEVATION "A" VIEW

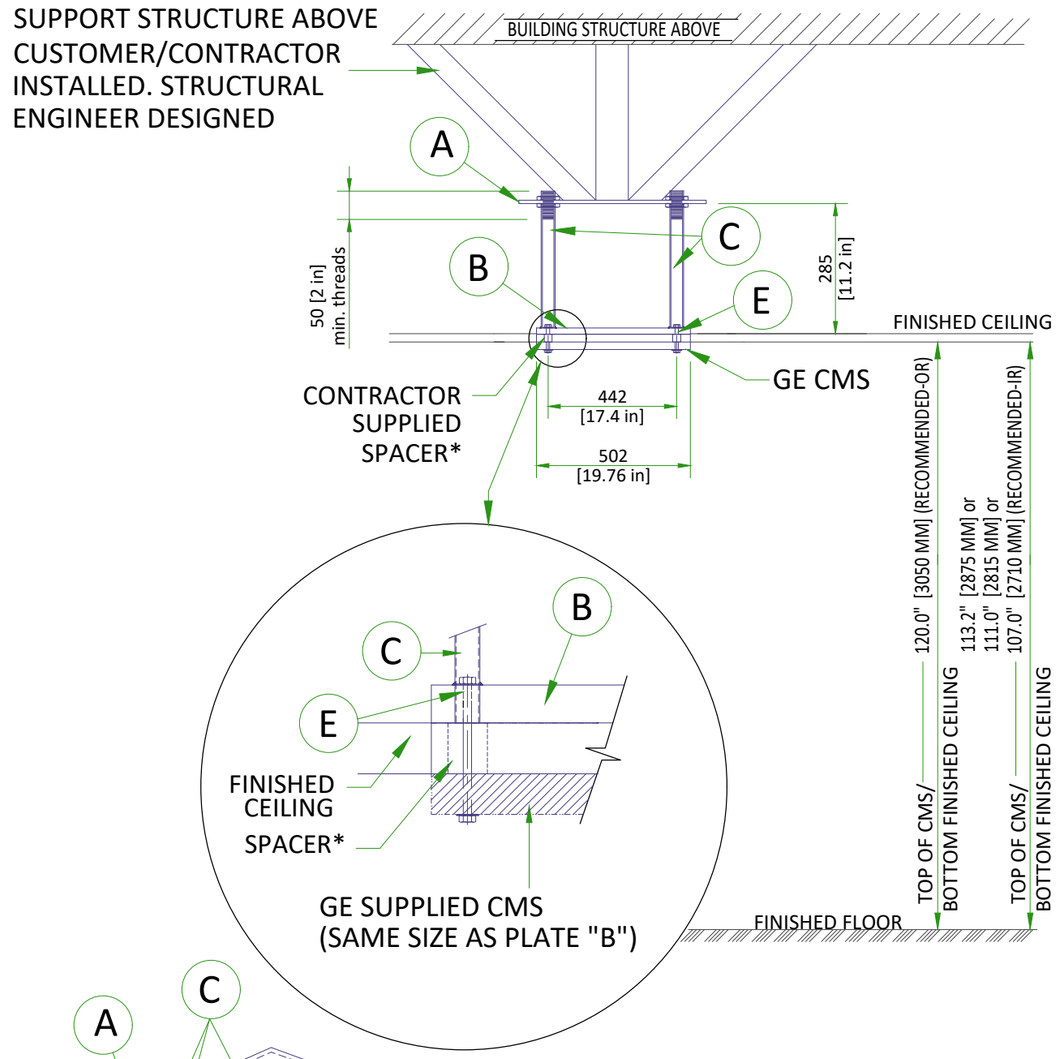

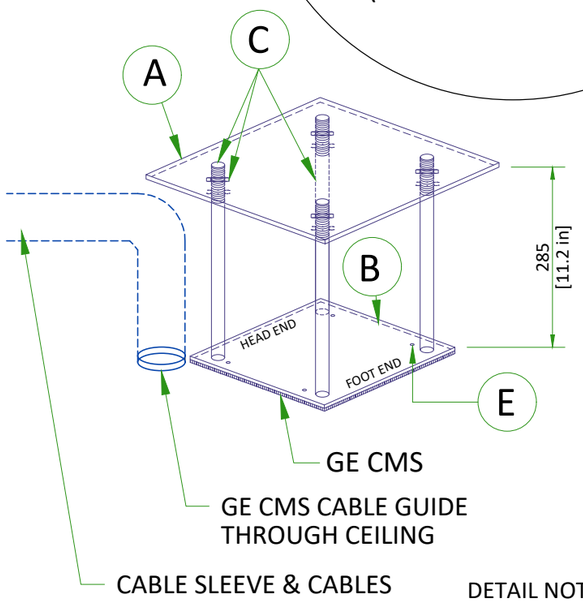

SCHEMATIC VIEW

* SPACER REQUIRED IF CONTRACTOR PLATE B NOT FLUSH WITH FINISHED CEILING.

DETAIL NOT TO SCALE

MAVIG FIX MONITOR SUSPENSION MOUNTING METHOD

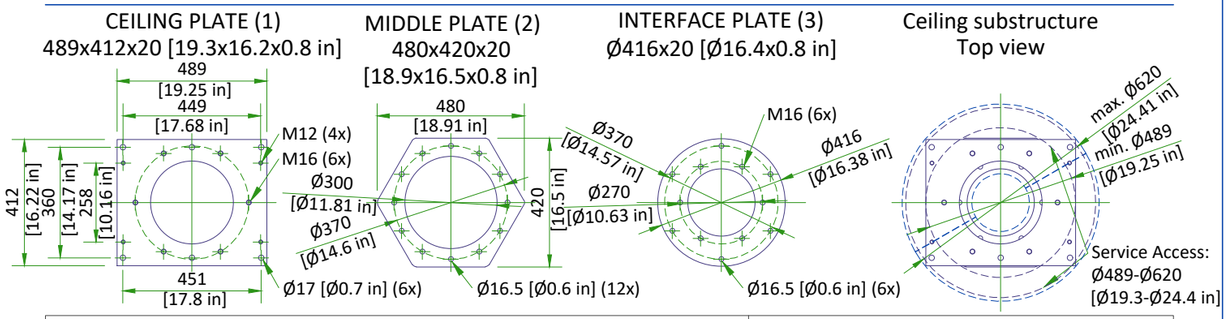

CAUTION	NOTE
• The maximum axial load per bolt : 7210 N • The maximum shear load per bolt : 957 N • The max. pull out force is defined in accordance with local codes	• steel threaded pins & nuts • threads (supplied by customer) • screws secured with Loctite 270 glue

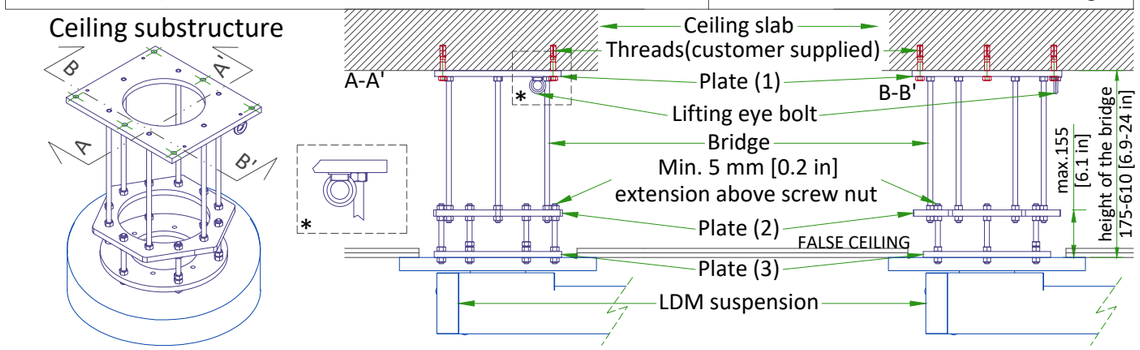

CEILING SUSPENSION DISCLAIMER

Safety and precautionary comments:

Only qualified, licensed technicians can perform electrical connections, installation, removal and repair. It is strongly recommended that at least two persons perform the installation.

Installing the system: Prior to installation, a structural engineer must confirm that the mounting structure is strong enough to provide proper support for the entire system and any attached end devices. Installation must be completed according to local building codes.

Determination of required installation hardware and torque values for installation of the ceiling column and ceiling track is the sole responsibility of the structural engineer.

Ceiling mounted systems must be installed properly. Failure to follow the instructions provided may lead to a potentially dangerous and unstable condition of the system.

GE and/or MAVIG is not responsible for unauthorized modifications made to the system or use of the system for unintended purposes. GE and/or MAVIG cannot be held liable for improper operation and modifications. Since improper modifications may impair proper operation, safety or reliability of the system, product modifications require written authorization from MAVIG.

Under GE responsibility or under Customer responsibility, for all pre-installations, whatever is the supporting structure (bridge, chair, Unistrut channel, other channels, direct anchorage in concrete, transversal beam, etc. …) a certificate must be obtained from a structural engineer.

This certificate shall include the definition of fasteners and of their tightening torque, especially for the non-standard cases described in MAVIG PIM and for which the standard anchoring/screws delivered with product shall not be used but shall be defined (and implemented in most cases) by the structural company.

WARNING:

It is prohibited to alter the length of the ceiling column or remove any securing screws.

TABLE MOUNTING WITH TABLE BASEPLATE

BASEPLATE COVER - SECTION A-A'

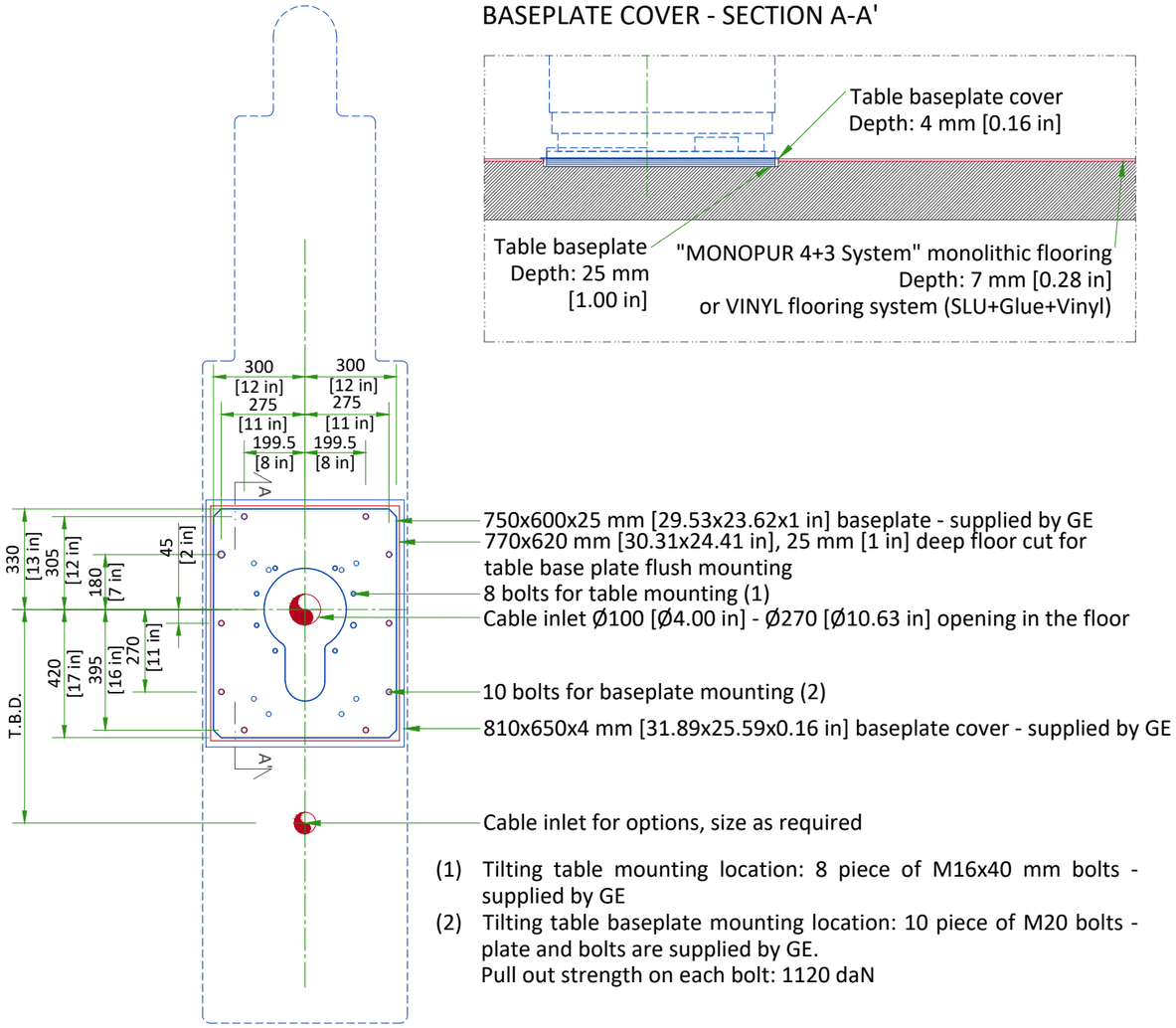

(1) Tilting table mounting location: 8 piece of M16x40 mm bolts - supplied by GE

(2) Tilting table baseplate mounting location: 10 piece of M20 bolts - plate and bolts are supplied by GE.
Pull out strength on each bolt: 1120 daN

BASEPLATE MOUNTING REQUIREMENTS

- The maximum pullout force per provided anchor was calculated assuming:
  - A concrete compression strength of **30 MPa** at 28 days (which is the minimum required compression strength).
  - Anchors installed to the required hole depth of **165.1 mm [6.50 in]** minimum.
  - The distance between the center of anchor hole and the edge of the concrete is **79.4 mm [3.13 in]**.
- Make sure to obtain data on compression strength of the concrete before using floor anchors.
- Chemical anchors can be used as well: HILTIHVU adhesive capsule + HAS Anchor rod.
- The fixation screws shall not jut out of the table baseplate, plate has to be level.

TEMPERATURE AND HUMIDITY SPECIFICATIONS

IN-USE CONDITIONS

	EXAM ROOM			CONTROL ROOM			TECHNICAL ROOM		
	Min	Recommended	Max	Min	Recommended	Max	Min	Recommended	Max
Temperature	15 °C [59 °F]	20 °C [68 °F]	32 °C [90 °F]	15 °C [59 °F]	20 °C [68 °F]	35 °C [95 °F]	15 °C [59 °F]	20 °C [68 °F]	25 °C [77 °F]
Temperature gradient	**≤ 10 °C/h**			**≤ 10 °C/h**			**≤ 10 °C/h**		
RH (1) non condensing	20% to 70%			20% to 75%			20% to 75%		
Humidity gradient	**≤ 10%/h**			**≤ 10%/h**			**≤ 10%/h**		

STORAGE CONDITIONS

Temperature	+10 °C [50 °F] to +40 °C [104 °F]
RH (1) non condensing	10% to 80%
Pressure	700 hPa to 1030 hPa
Overall storage time shall be less than 6 months.	

(1) Relative humidity

20 kVA FLUORO UPS

Air renewal	According to Standard IEC 62040-1-2

Systems with 20 kVA UPS shall be stored for less than 6 weeks if the storage temperature is above +30°C [86°F], and less than 12 weeks if storage temperature is above +25°C [77°F] .

AIR RENEWAL

According to local standards.

NOTE
In case of using air conditioning systems that have a risk of water leakage it is recommended not to install it above electric equipment or to take measures to protect the equipment from dropping water.

HEAT DISSIPATION

ROOM	DESCRIPTION	HEAT OUTPUT (kW)				HEAT OUTPUT (BTU/hr)			
		STAND BY	MODERATE[1]	TYPICAL[2]	MAX[3]	STAND BY	MODERATE[1]	TYPICAL[2]	MAX[3]
Exam room	Gantry and table	0.41	0.55	0.89	1.62	1399	1877	3037	5528
	6 19" monitors	0.30	0.30	0.30	0.30	1024	1024	1024	1024
	Large Display Monitor (LDM) with 2 backups	0.10	0.10	0.10	0.10	341	341	341	341
	Typical injector	0.09	0.09	0.09	0.09	307	307	307	307
	TOTAL	**0.90**	**1.04**	**1.38**	**2.11**	**3071**	**7200**	**4709**	**7200**
Control room	DL console and live monitor	0.10	0.10	0.10	0.10	341	341	341	341
	AW Workstation	0.59	-	0.59	0.59	2013	-	2013	2013
	CA1000 Workstation	0.59	-	0.59	0.59	2013	-	2013	2013
	MACLAB	-	-	1.20	1.20	-	-	4094	4094
	CARDIOLAB	-	-	1.20	1.20	-	-	4094	4094
	COMBOLAB	-	-	1.20	1.20	-	-	4094	4094
	TOTAL	**1.28**	**0.10**	**4.88**	**4.88**	**4367**	**341**	**16649**	**16649**
Technical room	C-FRT Cabinet	0.70	1.02	1.53	2.16	2388	3480	5221	7370
	PDU	0.50	0.50	0.50	0.50	1706	1706	1706	1706
	Tube Chiller	2.53	4.49	5.49	6.93	8633	15321	18733	23646
	Detector Conditioner	0.21	0.21	0.21	0.21	717	717	717	717
	UPS 8 kVA	0.52	0.52	0.52	0.52	1760	1760	1760	1760
	Fluoro UPS	2.14	2.14	2.14	2.14	7302	7302	7302	7302
	Full UPS (PF=0.8)	11.44	11.44	11.44	11.44	39034	39034	39034	39034
	TOTAL	**18.04**	**20.32**	**21.83**	**23.90**	**61540**	**69320**	**74473**	**81535**

WARNING
The list contains only the principal components of the system and doesn't contain any non-GE supplied equipment.

[1] Moderate Use corresponds to 8 cases in 10 hours.

[2] Typical Use corresponds to 11 cases in 10 hours.

[3] Maximum Use is maximum peak power during exam.

CONNECTIVITY REQUIREMENTS

Service Connectivity for new systems will be based on the Insite-RSvP Platform which allows to configure a direct Internet connection to the RSvP Server (routers/VPN tunnel no more mandatory). Communication with the RSvP server will be outbound only and require using Transport Layer Security (TLS) over TCP port 443. This is commonly known as an HTTPS (HTTP-Secure) connection.

There will be several ways to connect the system to the RSvP Enterprise Server. See below the main options that might not be all available or authorized at your site depending on actual network constraints or local regulations.:

- The system allows for DNS configuration or proxy server-based connection to the Internet.
- Connection thru a GE Proxy will be possible in the future.
- In the case the customer does not accept the above connection protocol or regulatory reasons prevent using these types of configurations, the local/regional connectivity teams can provide help to connect through SSL/TLS proxy IP over the site-to-site VPN.

To make the system connectivity operational before the system installation is finished, ensure the connectivity solution is defined as early as possible during the pre-installation process and proper information are exchanged between the customer Network Administrators and GEHC Sales and/or Service representatives.

For more information please refer to the latest version of the Pre Installation Manual.

ELECTRICAL NOTES

1. All wires specified shall be copper stranded, flexible, thermo-plastic, color coded, cut 10 foot long at outlet boxes, duct termination points or stubbed conduit ends. All conductors, power, signal and ground, must be run in a conduit or duct system. Electrical contractor shall ring out and tag all wires at both ends. Wire runs must be continuous copper stranded and free from splices.

1.1. Aluminum or solid wires are not allowed.

2. Wire sizes given are for use of equipment. Larger sizes may be required by local codes.
3. It is recommended that all wires be color coded, as required in accordance with national and local electrical codes.
4. Conduit sizes shall be verified by the architect, electrical engineer or contractor, in accordance with local or national codes.
5. Convenience outlets are not illustrated. Their number and location are to be specified by others. Locate at least one convenience outlet close to the system control, the power distritbution unit and one on each wall of the procedure room. Use hospital approved outlet or equivalent.
6. General room illumination is not illustrated. Caution should be taken to avoid excessive heat from overhead spotlights. Damage can occur to ceiling mounting components and wiring if high wattage bulbs are used. Recommend low wattage bulbs no higher than 75 watts and use dimmer controls (except MR). Do not mount lights directly above areas where ceiling mounted accessories will be parked.
7. Routing of cable ductwork, conduits, etc., must run direct as possible otherwise may result in the need for greater than standard cable lengths (refer to the interconnection diagram for maximum usable lengths point to point).
8. Conduit turns to have large, sweeping bends with minimum radius in accordance with national and local electrical codes.
9. A special grounding system is required in all procedure rooms by some national and local codes. It is recommended in areas where patients might be examined or treated under present, future, or emergency conditions. Consult the governing electrical code and confer with appropriate customer administrative personnel to determine the areas requiring this type of grounding system.
10. The maximum point to point distances illustrated on this drawing must not be exceeded.
11. Physical connection of primary power to GE equipment is to be made by customers electrical contractor with the supervision of a GE representative. The GE representative would be required to identify the physical connection location, and insure proper handling of GE equipment.
12. GEHC conducts power audits to verify quality of power being delivered to the system. The customer's electrical contractor is required to be available to support this activity.

- All junction boxes, conduit, duct, duct dividers, switches, circuit breakers, cable tray, etc., are to be supplied and installed by customers electrical contractor.
- Conduit and duct runs shall have sweep radius bends
- Conduits and duct above ceiling or below finished floor must be installed as near to ceiling or floor as possible to reduce run length.
- Ceiling mounted junction boxes illustrated on this plan must be installed flush with finished ceiling.
- All ductwork must meet the following requirements:

1.Ductwork shall be metal with dividers and have removable, accessible covers.
2.Ductwork shall be certified/rated for electrical power purposes.
3.Ductwork shall be electrically and mechanically bonded together in an approved manner.
4.PVC as a substitute must be used in accordance with all local and national codes.

- All openings in raceway and access flooring are to be cut out and finished off with grommet material by the customers contractor.
- General contractor to insert pull cords for all cable run conduits between the equipment room and the operators control room.
- 10 foot pigtails at all junction points.
- Grounding is critical to equipment function and patient safety. Site must conform to wiring specifications shown on this plan.

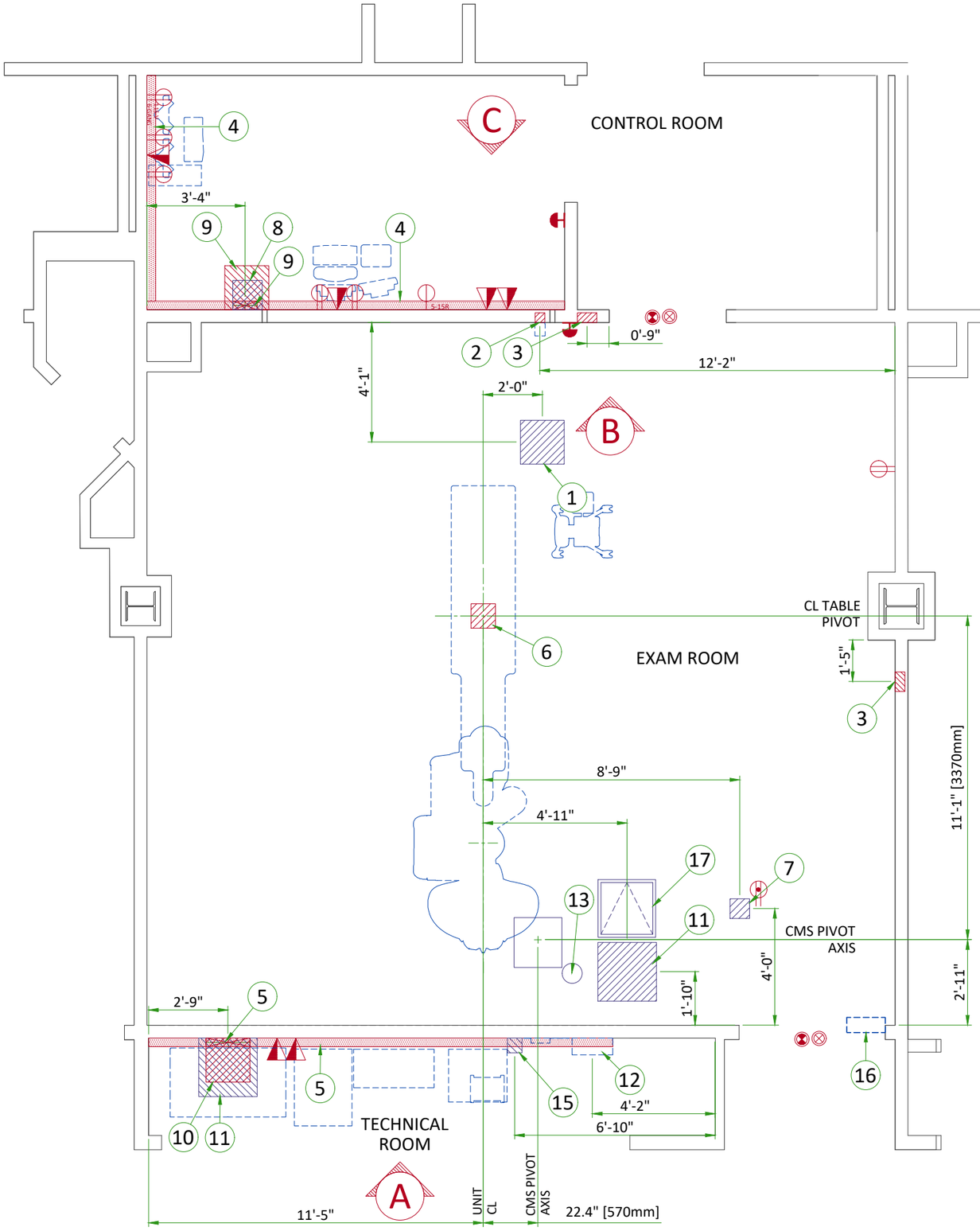

ITEM	ELECTRICAL LAYOUT ITEM LIST
1	18"x18"x6" [450 x 450 x 150] box above ceiling for monitors
2	4"x4"x4" [100 x 100 x 100] flush wall junction box 12" [300] below finished ceiling (x-ray buzzer)
3	8"x6"x4" [200x150x100] flush wall box (I-Point, refer to detail on E4)
4	10" x 3 1/2" [250 x 89] surface wall duct with minimum 2 dividers
5	18" x 3 1/2" [450 x 89] surface wall duct with minimum 2 dividers
6	8" x 8" x 6" [200 x 200 x 150] box below floor at table
7	8" x 8" x 6" [200 x 200 x 150] box above ceiling for patient monitoring equipment (PDM/TRAM)
8	12"x12"x6" [300 x 300 x 150] box above ceiling in control room
9	18" x 18" x 6" [450 x 450 x 150] box below floor in control room
10	18"x18"x6" [450 x 450 x 150] box below floor in equipment room
11	24"x24"x12" [600 x 600 x 300] box above ceiling in equipment room
12	Main disconnect panel
13	Cable management system (CMS)
14	24"x24"x12" [600 x 600 x 300] box above ceiling near CMS
15	6"x6"x6" [150 x 150 x 150] box above ceiling for waterlines
16	Light signaling control box
17	24"x24" [600 x 600] service access panel in ceiling

ITEM	QTY	Outlet Legend for GE Equipment
		System emergency off (SEO), (recommended height 1.2m [48"] above floor)
		X-Ray ON lamp (L1) - 24 V
		System ON lamp (L) - 24 V (only if needed per local codes)
		Duplex hospital grade, dedicated wall outlet 120-v, single phase power
		Duplex hospital grade, dedicated ceiling outlet 120-v, single phase power
		Network outlet
		Duplex hospital grade, dedicated outlet 120-v emergency, single phase power, 15a
115-V 6-GANG		6-Gang hospital grade, dedicated wall outlet 115-V, single phase power
5-15R		5-15R NEMA Receptacle, dedicated outlet 120-v, single phase power

Additional Conduit Runs
(Contractor Supplied and Installed)

From (Bubble # / Item)		To (Bubble # / Item)		Qty	Usable length	Size (in)
11	Cable Management System	11	CFRT Cabinet	2&2	42 ft.	4 & 3
6	Table	10	CFRT Cabinet	1	62 ft.	4
9	Control Room	10	CFRT Cabinet	1&2	59 ft.	$3\frac{1}{2}$"&$2\frac{1}{2}$"
9	Bolus Chase	6	Table	1	85 ft.	$2\frac{1}{2}$
15	Water Line	13	Cable Management System	1	59 ft.	3
16	Light Signaling Control Box		Warning light	1	-	$\frac{1}{2}$
16	Light Signaling Control Box	11	System Interface Cab. (PDU)	1	-	$\frac{1}{2}$
16	Light Signaling Control Box		120-V 1 phase power	1	-	As Req'd
2	X-Ray Buzzer	11	CFRT Cabinet	1	90 ft.	$1\frac{1}{2}$
2	X-Ray Buzzer	8	Control Room	1	90 ft.	$1\frac{1}{2}$
1	Monitor Bridge / Boom	8	Control Room	1	88 ft.	$2\frac{1}{2}$
1	Large Display Monitor	11	CFRT Cabinet (LDM server)	1	88 ft.	3&$\frac{3}{4}$
10	CFRT Cabinet (LDM server)	9	Control Room	1	59 ft.	3
11	CFRT Cabinet (LDM server)	7	TRAM/PDM	2	-	3
12	Main Disconnect Panel	5	20 kVA UPS	2	-	As Req'd
11	System Interface Cab. (PDU)		Emergency off	1	-	$\frac{1}{2}$
11	System Interface Cab. (PDU)		Emergency off	1	-	$\frac{1}{2}$
12	Main Disconnect Panel	5	System Interface Cab. (PDU)	1	14-44 ft.	1
15	Detector Water Lines	13	Cable Management System	1	59 ft.	3
9	Patient Monitoring Console	1	Monitor Bridge / Boom	1	-	3
9	Patient Monitoring Console	7	TRAM/PDM	2	-	3
3	I-Point (#1)	11	I-Box	1	98 ft.	$2\frac{1}{2}$
3	I-Point (#2)	11	I-Box	1	98 ft.	$2\frac{1}{2}$

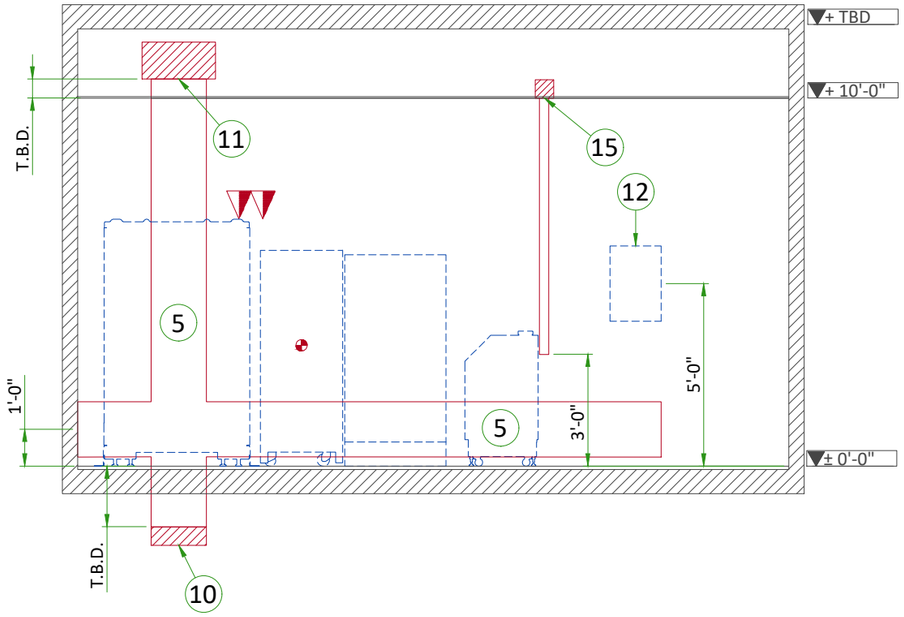
+ TBD
+ 10'-0"
± 0'-0"
T.B.D.
1'-0"
5'-0"
3'-0"
11
15
12
5
5
10

A

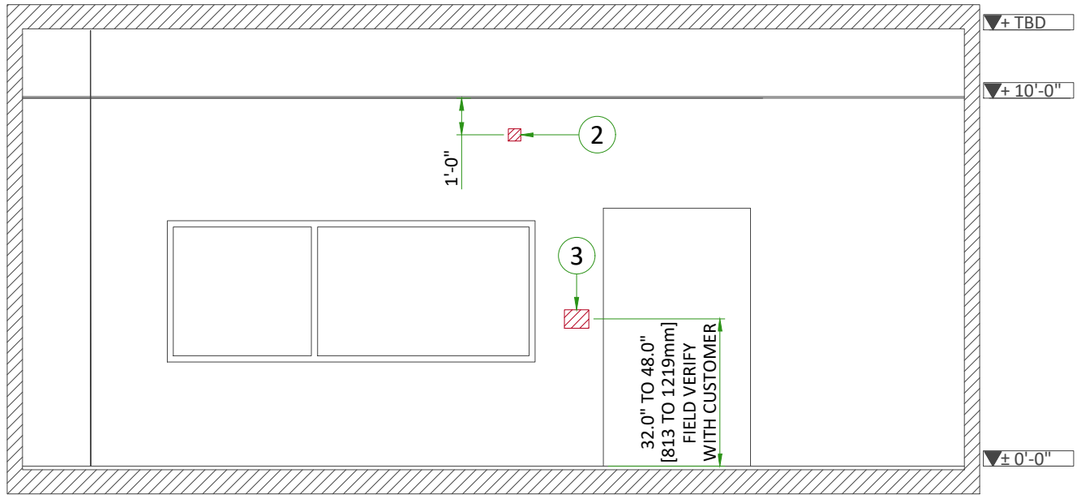
+ TBD
+ 10'-0"
± 0'-0"
1'-0"
2
3
32.0" TO 48.0"
[813 TO 1219mm]
FIELD VERIFY
WITH CUSTOMER

B

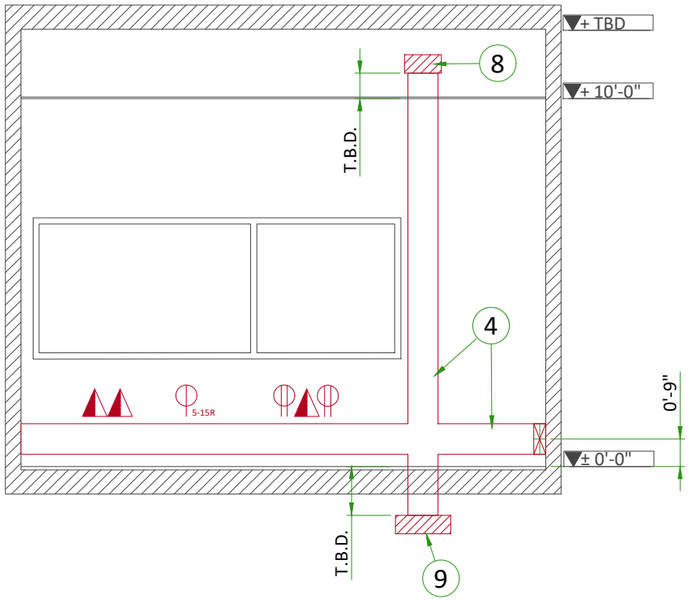
+ TBD
+ 10'-0"
± 0'-0"
T.B.D.
T.B.D.
0'-9"
8
4
9
5-15R

C

TYPICAL CABLE MANAGEMENT

CONDUIT IN THE FLOOR

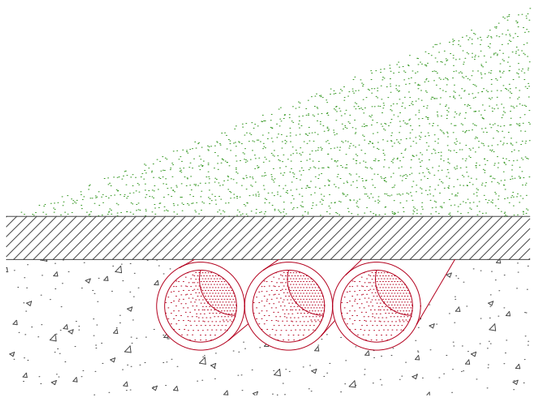

WALL DUCT

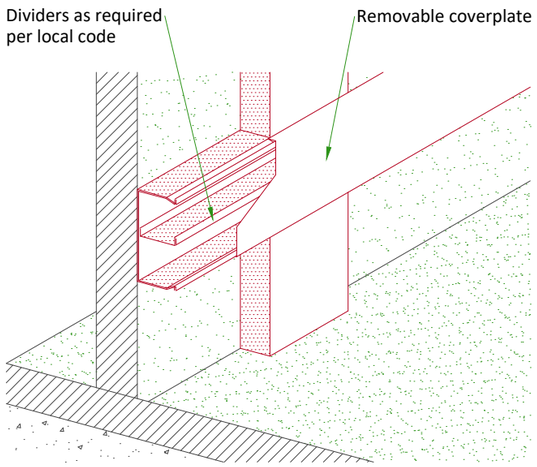

NOT TO SCALE

I-POINT

PLASTER WALL

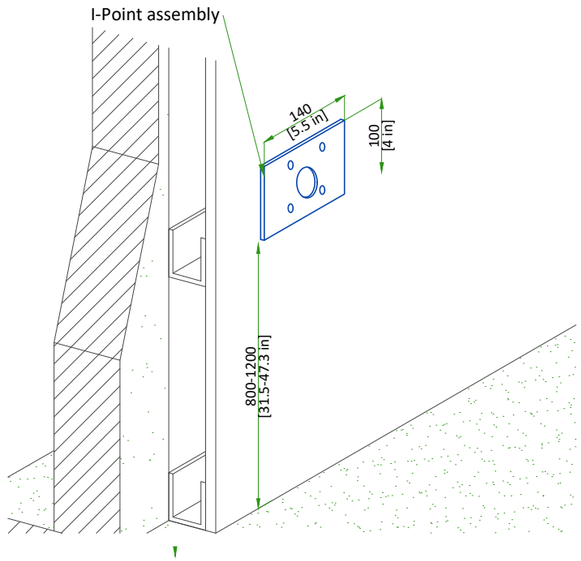

I-POINT INSTALLATION

- The I-Point is the component which allows the connection of the Discovery Control Center in the exam room.
- The I-Point position in the room is determined by the customer during the layout consideration, however it should be located in the rear part of the table column to avoid impacts with the AGV during motion.
- Cable ducts and optional holder/supportive box for the Ipoint is not supplied by GE and must be designed, calculated and supplied locally.

	I-POINT
FIXATION	To the wall
QUANTITY IN EXAM ROOM	2
CABLE OPENING	Ø90 mm [Ø3.5 in] or 100x70 mm [5.5x2.8 in]
INSTALL HEIGHT FROM FINISHED FLOOR	800-1200 mm [31.5-47.3 in]

POWER REQUIREMENTS

POWER SUPPLY	**3 PHASES+N+G 380/400/415/480 V ±10%**
FREQUENCIES for 380/400/415V	**50/60 Hz ± 3 Hz**
FREQUENCY for 480V	**60 Hz ± 3Hz**
PEAK POWER CONSUMPTION	**150 kVA**
MOMENTARY POWER CONSUMPTION	**100 kVA**
LONG TIME POWER CONSUMPTION	**18 kVA**
MINIMUM PROTECTION	**100 A (D curve or equivalent)**
MAXIMUM LINE IMPEDANCE PHASE TO PHASE	**380 V : 0.09 Ω / 400 V : 0.096 Ω / 415 V : 0.102 Ω / 480 V : 0.12 Ω**

- Neutral is mandatory for Fluoro UPS (20 kVA) control.
- TNS neutral point connection must be used.
- In case of IT or delta configuration without neutral, an isolation transformer is needed (supplied by customer)
- Power supply should come into a Mains Disconnect Panel (MDP) containing the protective units and controls.
- The section of the supply cable should be calculated in accordance with its length and the maximum line resistance per 2 phases.

SUPPLY CHARACTERISTICS

- Power input must be separated from any others which may generate transients (elevators, air conditioning, radiology rooms equipped with high speed film changers ...)
- All equipment installed with IGS system components must be powered separately (e.g. lighting, power outlets)
- Transients must be less than 2,000 V peak in common mode and 1,000 V in differential mode, with a duration limited to a few microseconds.

GROUND SYSTEM

- At least 35mm² copper from main ground point to the MDP.
- The equipotential link will be by means of an equipotential bar. This equipotential bar should be connected to the protective earth conductors in the ducts of the non IGS cableways and to additional equipotential connections linking up all the conducting units in the rooms where IGS units are located.

CABLES

- Power and cable installation must comply with the distribution diagram.
- MDP to PDU cable shall be copper cable and cable insulation temperature shall be 90°C.
- All cables must be isolated and flexible, cable color codes must comply with standards for electrical installation.
- The cables from signalling and remote control (SEO, L...) will go to PDU with a pigtail lenght of 2.0 m, and will be connected during installation.
- Each conductor will be identified and isolated (screw connector).

CABLEWAYS

The general rules for laying cableways should meet the conditions laid down in current standards and regulations, with regard to :

- Protecting cables against water (Cableways should be waterproof),
- Protecting cables against abnormal temperatures (Proximity to heating pipes or ducts),
- Protecting cables against temperature shocks,
- Replacing cables (Cableways should be large enough for cables to be replaced) ,
- Only GE cables are running inside cableways,
- Metal cableways should be grounded.

MANDATORY LOTO REQUIREMENTS

- The MDP shall provide means of disconnecting the mains power from the system, with LOTO capability to ensure safe service operation. It can be done by the input breaker if it has disconnecting capability, or by a separate disconnection device.
- An operator should be able to apply LOTO without opening the MDP box. When a LOTO device is installed on the MDP input breaker or on the disconnecting device, there shall be no voltage at the output of the MDP.

POWER DISTRIBUTION FOR IGS SYSTEM

POWER SUPPLY FOR MAIN SYSTEM

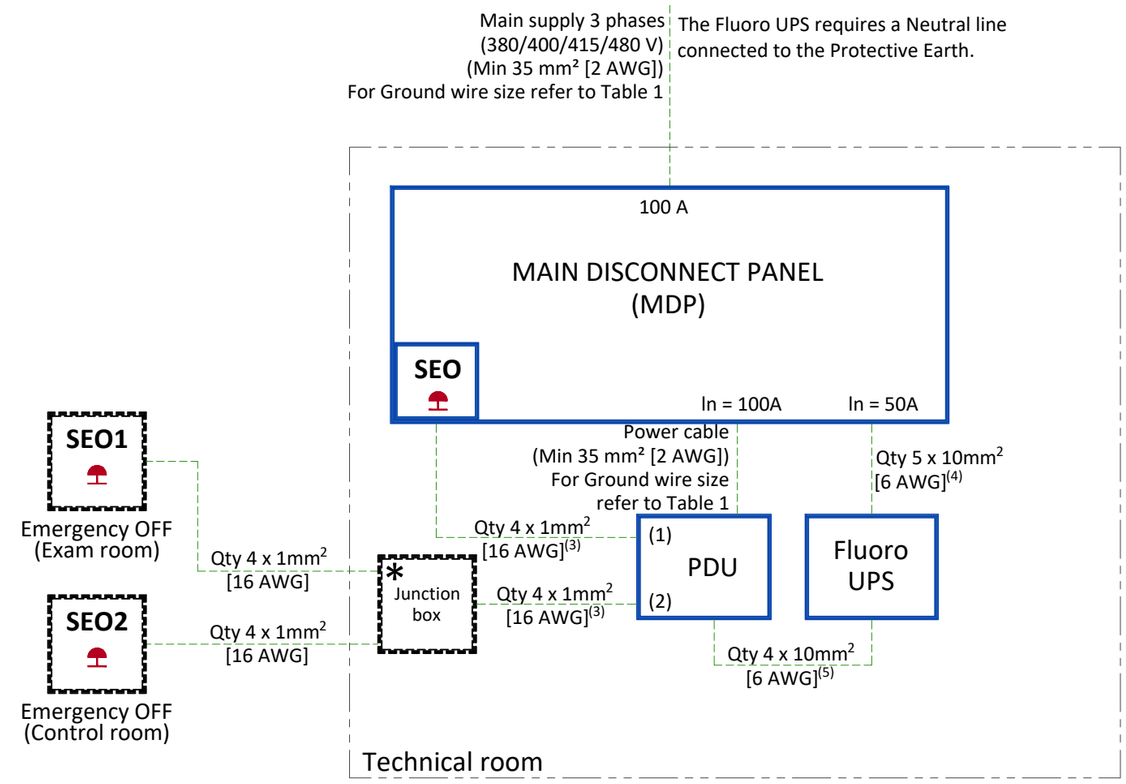

SEO Emergency OFF button with two normally closed (NC) contacts in the door of MDP

SEO 1-2 Emergency OFF button with two NC contacts located 1.50 m [5 ft] above floor
The EPO button shall be protected against accidental activation.
*Series connection of SEO1 and SEO2 NC contacts

PDU Power Distribution Unit/System Interface Cabinet

Table 1

LENGTH	<6 m [20 ft]	<15.1 m [50 ft]
GAUGE	Qty 1x2 AWG	Qty 2x2 AWG
GAUGE	Qty 1x35 mm²	Qty 2x35 mm²

NOTES:

(1) Emergency power off : MDP EPO

(2) Emergency power off : Remote EPO

(3) Cable with 2 m [6.6 ft] extra length on the floor behind the PDU

(4) If length < 10 m [32.8 ft] - Cable with 2 m [6.6 ft] extra length on the floor behind the Fluoro UPS

(5) If length < 12 m [39.4 ft] - Cable with 2 m [6.6 ft] extra length on the floor behind the Fluoro UPS and PDU

- Cable SUPPLIED BY CUSTOMER
- Cable SUPPLIED BY GE
- Equipment SUPPLIED BY CUSTOMER
- Equipment SUPPLIED BY GE

INTERCONNECTIONS

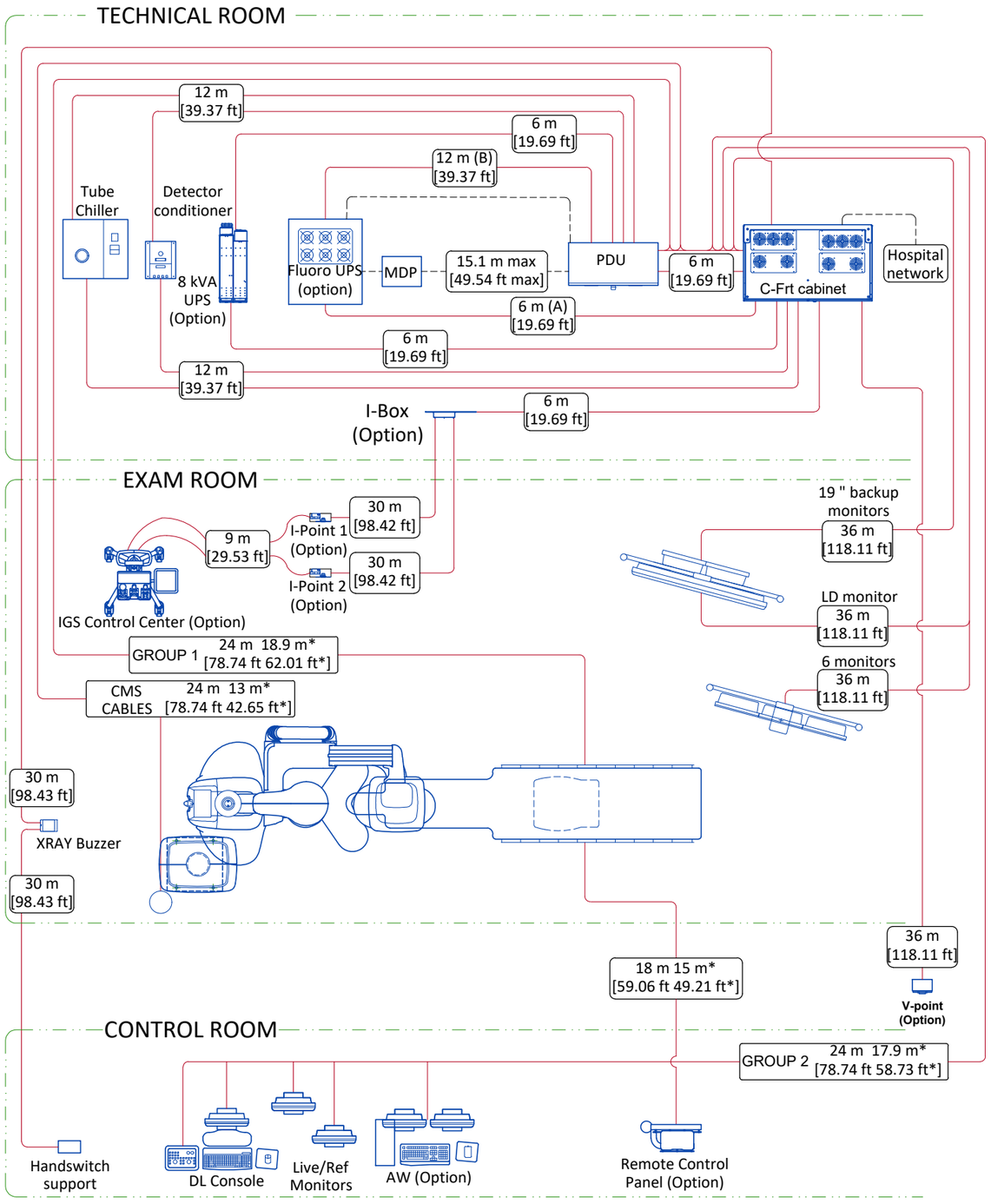

- - - - - - - - - - - - - - - -		Cable supplied by the client
		Cable supplied by GE
		Room wall
.....m	.....ft	Total length
.....m*	.....ft*	Usable/Conduit length

Notes:

(A): A 6 m Ethernet cable between the C-FRT Cabinet and the Fluoro UPS is provided with the system. If a longer cable is needed, it shall be provided by the hospital; it shall be Cat5 minimum.

(B): A 12 m EPO cable between the PDU and the Fluoro UPS is provided with the system. If a longer cable is needed, it shall be provided by the hospital, its minimum gauge shall be 1 mm^2 [17 AWG].

POWER REQUIREMENTS (LIGHT SIGNALING)

SPECIFICATIONS OF POWER INPUT

FOR ELECTRICAL BOX LIGHT SIGNALING	
POWER DEMAND	**10 A**
VOLTAGE	**Single Phase 100V - 240V ± 10%**
FREQUENCY	**50/60 Hz ± 3Hz**

POWER DISTRIBUTION (LIGHT SIGNALING)

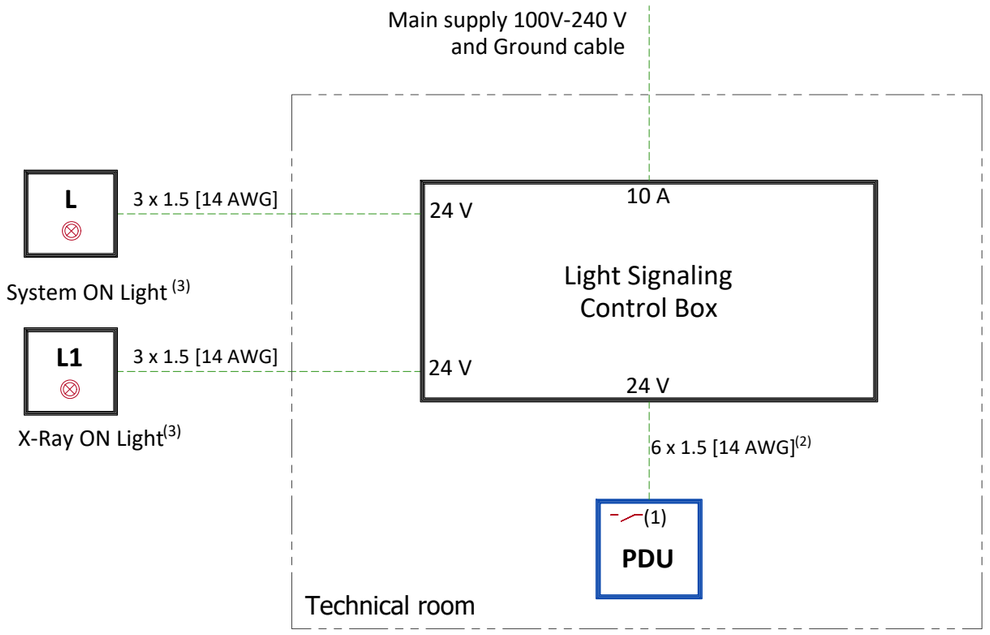

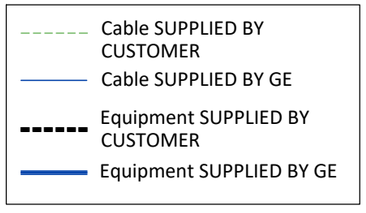

L System ON light - Located near access doors (3)(4)

L1 XRay ON light - 24 V, Located near access doors and inside the exam room (3)(4)

PDU Power Distribution Unit/System Interface Cabinet

NOTES:

(1) Three dry contacts: "System ON", "X-Ray ON" and Room lights control are released by PDU. Max. voltage = 24 V

(2) Cable with 2m [6.6ft] extra length on the floor behind the back of PDU

(3) Location and/or quantity: refer to layout

DETAILED SCHEMATICS ELECTRICAL BOX (LIGHT SIGNALING)

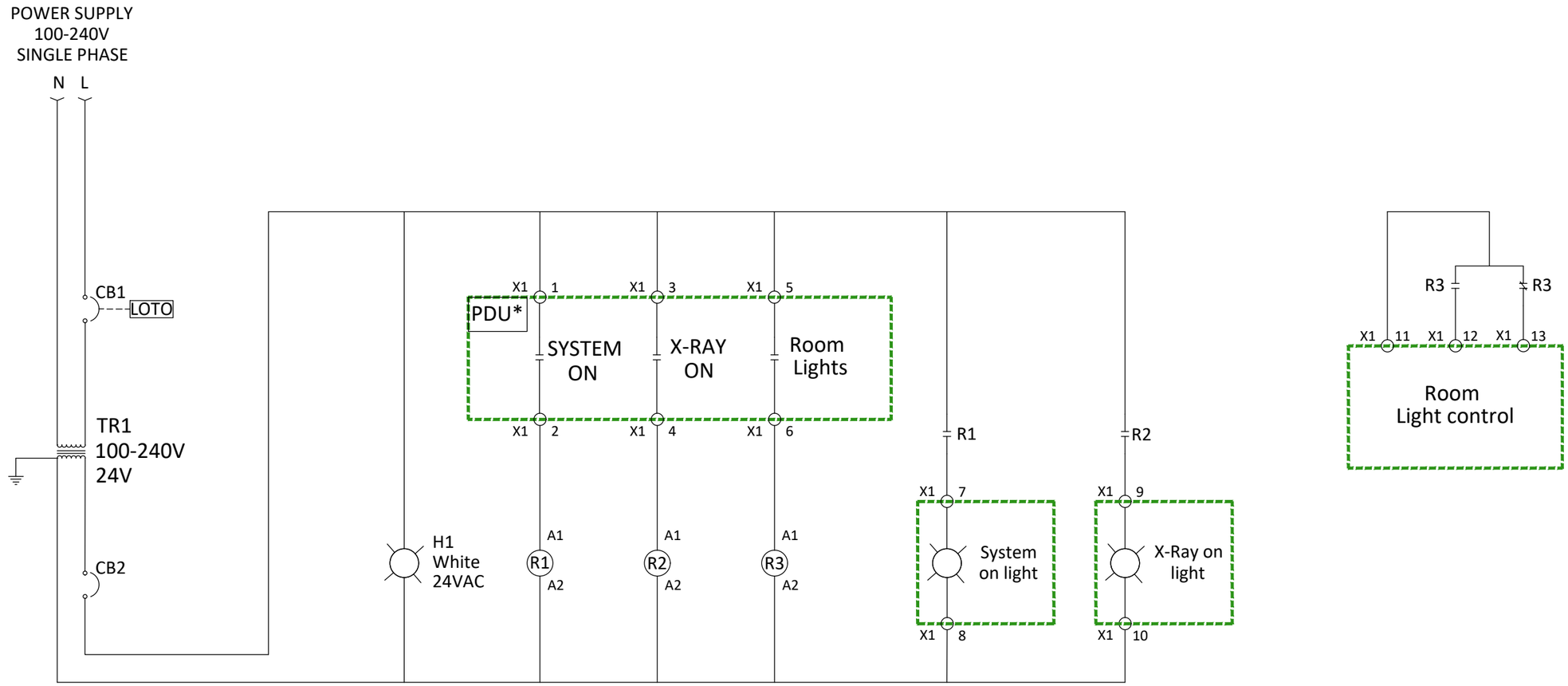

IG: Lockable interruptor
CB1/CB2: Circuit breaker
R1/R2/R3: 24 VAC 50/60 Hz auxiliary relay
TR1: Transformer

H1: System ON lamp voltage control
L: System ON Lamp
L1: X-Ray ON Lamp

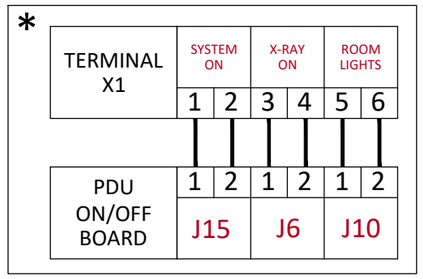

SYMBOLS LEGEND

- Circuit breaker
- Relay coil
- Relay contact - normally open (de-energized state)
- Relay contact - normally closed (de-energized state)
- Control power transformer
- Indication light
- Cable/conductor termination
- LOTO External lock-out/tag-out capability
- Ground