REV	DATE	MODIFICATIONS
A	17/Sep/2021	First issue drawing

Typical

---

01 - C1 - Cover Sheet
02 - C2 - Disclaimer - Site Readiness Checklist
03 - A1 - General Notes
04 - A2 - Equipment Layout
05 - A3 - Radiation Protection
06 - A4 - Radiation Protection Details
07 - A5 - Equipment Dimensions (1)
08 - A6 - Equipment Dimensions (2)
09 - A7 - Delivery
10 - S1 - Structural Notes
11 - S2 - Structural Layout
12 - S3 - Structural Details (1)
13 - S4 - Structural Details (2)
14 - M1 - HVAC
15 - E1 - Electrical Notes
16 - E2 - Electrical Layout
17 - E3 - Electrical Elevations
18 - E4 - Power Requirements
19 - E5 - Electrical Details - Interconnect

A mandatory component of this drawing set is the GE Healthcare Pre Installation manual. Failure to reference the Pre Installation manual will result in incomplete documentation required for site design and preparation.
Pre Installation documents for GE Healthcare products can be accessed on the web at: www.gehealthcare.com/siteplanning

GE does not take responsibility for any damages resulting from changes on drawings made by others. Errors may occur by not referring to the complete set of final issue drawing. GE cannot accept responsibility for any damage due to the partial use of GE final issue drawings, however caused. All dimensions are in millimeters unless otherwise specified. Do not scale from printed pdf files. GE accepts no responsibility or liability for defective work due to scaling from these drawings.

GE Healthcare

REVOLUTION ASCEND FINAL STUDY

Drawn by	Verified by	Concession	S.O. (GON)	PIM Manual	Rev
RET	CRM	-	-	5987663-1EN	2

Format	Scale	File Name	Date	Sheet
A3	1/4"=1'-0"	EN-CT-TYP-REVOLUTION_ASCEND-WEB.DWG	29/Oct/2021	01/19

DISCLAIMER

GENERAL SPECIFICATIONS

- GE is not responsible for the installation of developers and associated equipment, lighting, cassette trays and protective screens or derivatives not mentioned in the order.
- The final study contains recommendations for the location of GE equipment and associated devices, electrical wiring and room arrangements. When preparing the study, every effort has been made to consider every aspect of the actual equipment expected to be installed.
- The layout of the equipment offered by GE, the dimensions given for the premises, the details provided for the pre-installation work and electrical power supply are given according to the information noted during on-site study and the wishes expressed by the customer.
- The room dimensions used to create the equipment layout may originate from a previous layout and may not be accurate as they may not have been verified on site. GE cannot take any responsibility for errors due to lack of information.
- Dimensions apply to finished surfaces of the room.
- Actual configuration may differ from options presented in some typical views or tables.
- If this set of final drawings has been approved by the customer, any subsequent modification of the site must be subject to further investigation by GE about the feasibility of installing the equipment. Any reservations must be noted.
- The equipment layout indicates the placement and interconnection of the indicated equipment components. There may be local requirements that could impact the placement of these components. It remains the customer's responsibility to ensure that the site and final equipment placement complies with all applicable local requirements.
- All work required to install GE equipment must be carried out in compliance with the building regulations and the safety standards of legal force in the country concerned.
- These drawings are not to be used for actual construction purposes. The company cannot take responsibility for any damage resulting therefrom.

CUSTOMER RESPONSIBILITIES

- It is the responsibility of the customer to prepare the site in accordance with the specifications stated in the final study. A detailed site readiness checklist is provided by GE. It is the responsibility of the customer to ensure all requirements are fulfilled and that the site conforms to all specifications defined in the checklist and final study. The GE Project Manager of Installation (PMI) will work in cooperation with the customer to follow up and ensure that actions in the checklist are complete, and if necessary, will aid in the rescheduling of the delivery and installation date.
- Prior to installation, a structrual engineer of record must ensure that the floor and ceiling is designed in such a way that the loads of the installed system can be securely borne and transferred. The layout of additional structural elements, dimensioning and the selection of appropriate installation methods are the sole responsibility of the structural engineer. Execution of load bearing structures supporting equipment on the ceiling, floor or walls are the customer's responsibility.

RADIO-PROTECTION

- Suitable radiological protection must be determined by a qualified radiological physicist in conformation with local regulations. GE does not take responsibility for the specification or provision of radio-protection.

THE UNDERSIGNED, HEREBY CERTIFIES THAT I HAVE READ AND APPROVED THE PLANS IN THIS DOCUMENT.		
DATE	NAME	SIGNATURE

GLOBAL SITE READINESS CHECKLIST (DI)

DOC1809666 Rev. 7

Site Ready Checks at Installation
EHS Site Requirements
Overall access route to the scan room free from obstruction / high hazards.
Enough space to store tools, equipment, parts, install waste and the general area free from obstruction and trip hazards.
Enough necessary facilities for the GE employees available.
No 3rd parties working in the area that may affect the safety of the installation activity.
Area free from any chemical, gas, dust, welding fume exposure and has painting been completed and dry.
All emergency routes identified, signed and clear from obstruction.
Accessible single source lockable panel that LOTO can be applied to for GE equipment installation (MDP and/or PDU).
There are no other conditions or hazards that you have observed or have been made aware of by the customer or contractors on site.
Required for Mechanical Install start
Room dimensions, including ceiling height, for all Exam, Equipment/Technical & Control rooms meets GE specifications.
Ceiling support structure, if indicated on the GE drawing, is in the correct location and at the correct height according to the Original Equipment Manufacturer specifications.
Levelness and spacing has been measured, and is ready for the installation of any GE supplied components.
Overhead support Structure (unistrut) has been confirmed with customer/contractor to meet required GE provided criteria.
Finished ceiling is installed. If applicable ceiling tiles installed per PMI discretion.
Floor levelness/flatness is measured and within tolerance, and there are no visible defects per GEHC specifications.
Entry door threshold meets PIM requirement.
Rooms that will contain equipment, including staging areas if applicable, are construction debris free. Precautions must be taken to prevent debris from entering rooms containing equipment.
Cable ways (floor/wall/ceiling/Access Flooring) are available for installation of GE cables are of correct length and diameter.
Cable ways routes per GE Final drawings and cable access openings areas installed at a time determined by GEHC PM. Surface floor duct can be installed at time of system installation.
Adequate room illumination installed and working.
Customer supplied countertops where GE equipment will be installed are in place.
Required for Calibration Start
HVAC systems Installed, and the site meets minimum environmental operational system requirements.
System power & grounding (PDB/MDP) is available as per GE specifications.
System power & grounding (PDB/MDP) is installed at point of final connection and ready to use. Lock Out Tag Out is available.
PMI to confirm all feeder wires and breaker are size appropriately. EPO installed if needed.
PMI to confirm with electrician all power and signal cables are well terminated ensuring there are no loose connections.
Network outlets installed.
Computer network available and working.
Lead doors and windows complete or scheduled to be installed. If applicable, radiation protection (shielding) finished & radioprotection regulatory approval for installation obtained.

Note: The details shown here are only an extract from DOC1809666. For the complete document please contact your PMI.

ENVIRONMENT

ALTITUDE

- The system shall meet all functional and performance specifications when placed in a room that is at an elevation of -150 m to 4000 m [-492 ft to 13,124 ft] above sea level.

MAGNETIC FIELD SPECIFICATIONS

- Limit the magnetic interference to guarantee specified imaging performance.

GANTRY:
- Ambient static magnetic fields less than 1 Gauss.
- Ambient AC magnetic fields less than 0.01 Gauss peak.

OPERATOR CONSOLE:
- Ambient static magnetic fields less than 10 Gauss.

SYSTEM COMPONENT NOISE LEVEL

- **Maximum Gantry Audible Noise Level:** The maximum ambient noise level is produced by the gantry during a CT scan acquisition. It is less than 70 dBA when measured at a distance of 1 m [3.3 ft] from the nearest gantry surface, in any direction.
- **Maximum Console Audible Noise Level:** The maximum ambient noise levels is less than 54 dBA when measured at a distance of 1 m [3.3 ft] from the nearest console surface, in any direction.

CUSTOMER SITE READINESS REQUIREMENTS

- Any deviation from these drawings must be communicated in writing to and reviewed by your local GE healthcare installation project manager prior to making changes.
- Make arrangements for any rigging, special handling, or facility modifications that must be made to deliver the equipment to the installation site. If desired, your local GE healthcare installation project manager can supply a reference list of rigging contractors.
- New construction requires the following;
  1. Secure area for equipment,
  2. Power for drills and other test equipment,
  3. Capability for image analysis,
  4. Restrooms.
- Provide for refuse removal and disposal (e.g. crates, cartons, packing)
- For CT, MR, PET/CT, and SPECT systems it is required to minimize vibrations within the scan room. It is the customer's responsibility to contract a vibration consultant/engineer to implement site design modifications to meet the GE vibration specification. Refer to the system preinstallation manual for vibration specifications.

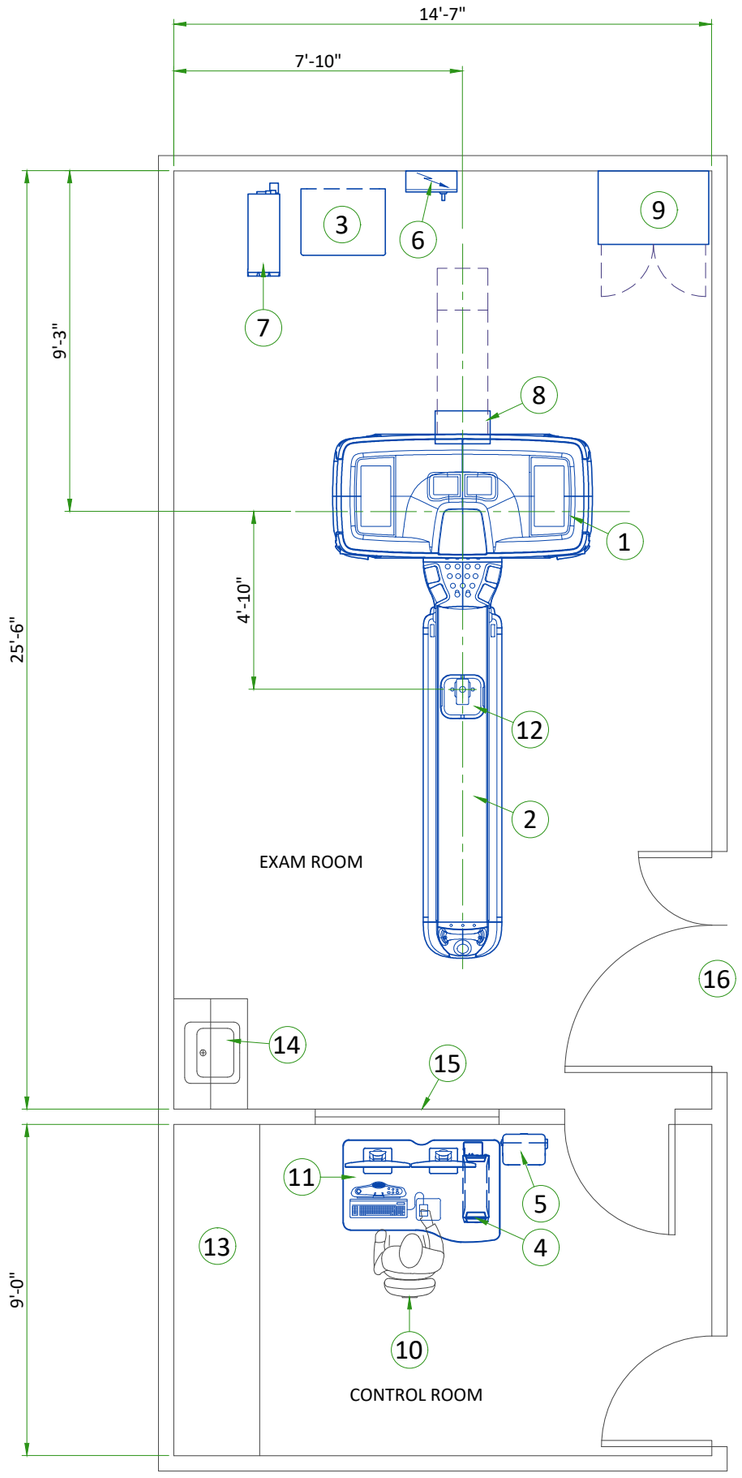

LEGEND			
A	GE Supplied	D	Available from GE
B	GE Supplied/contractor installed	E	Equipment existing in room
C	Customer/contractor supplied and installed	*	Item to be reinstalled from another site

BY	ITEM	DESCRIPTION	MAX HEAT OUTPUT (btu)	WEIGHT (lbs)	MAX HEAT OUTPUT (W)	WEIGHT (kg)
A	1	Gantry	18700	3979	5480	1805
A	2	Patient Table (VT2000x)	1030	1797	300	815
A	3	Power Distribution Unit	3400	816	1000	370
A	4	Operators Console	3200	57	940	26
A	5	Console Power Box	-	22	-	10
B/D	6	Main Disconnect Panel	-	46	-	21
A/D	7	Partial UPS (10 kVA)	2828	265	830	120
A/D	8	Rear Cable Cover	-	-	-	-
A/D	9	Service Cabinet	-	-	-	-
A/D	10	Operators Chair	-	-	-	-
A/D	11	Console Desk	-	126	-	57
A/D	12	Express Camera	-	7	-	3
C	13	Counter top with base cabinets				
C	14	Counter top with sink, base and wall cabinets				
C	15	Lead glass window				
C	16	Minimum door opening for equipment delivery is 42 in. w x 82 in. h [1067mm x 2083mm], contingent on a 96 in. [2439mm] corridor width				

EXAM ROOM HEIGHT		
Finished ceiling height	MIN. 7'-6"	REC. 9'-0"

For Accessory Sales: (866) 281-7545 Options 1, 2, 1, 2 or mail to: gehcaccessorysales@ge.com

RADIATION PROTECTION LAYOUT

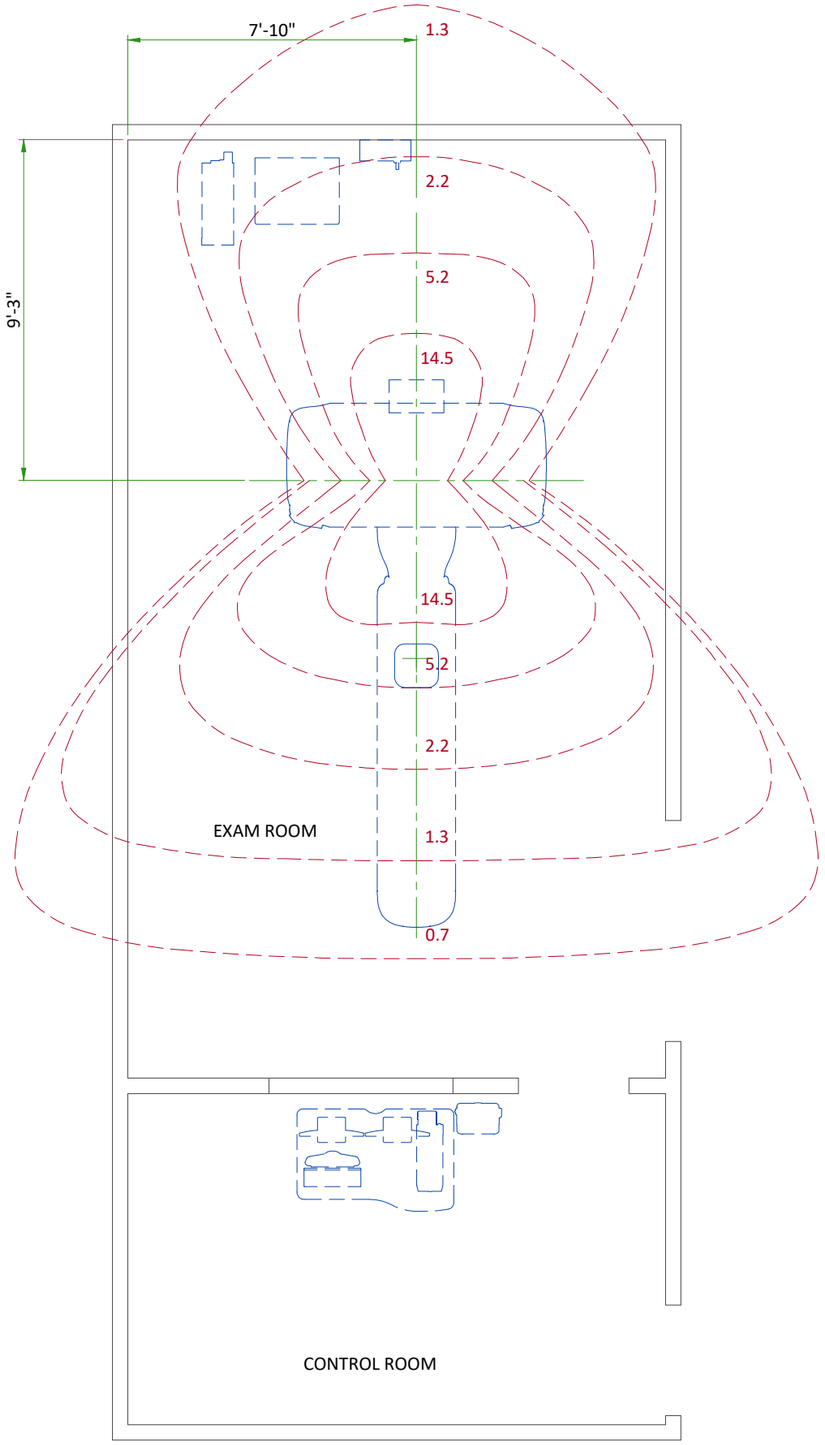

SHIELDING REQUIREMENTS SCALING	
CHANGED PARAMETER (mAs)	MULTIPLICATION FACTOR (new mAs/100)
80 kV	0.24
100 kV	0.45
120 kV	0.71
140 kV	1.00
1 mm aperture	0.20
3 mm aperture	0.22
5 mm aperture	0.27
10 mm aperture	0.38
15 mm aperture	0.48
20 mm aperture	0.59
30 mm aperture	0.79
40 mm aperture	1.00

SHIELDING REQUIREMENTS:

Engage a qualified radiological health physicist to review your scan room shielding requirements, taking into consideration:

- Scatter radiation levels within the scanning room
- Equipment placement
- Weekly projected work-loads (number of patients/day technique (kvp*ma))
- Materials used for construction of walls, floors, ceiling, doors, and windows
- Access to surrounding scan room areas
- Equipment in surrounding scan room areas (e.g., film developer, film storage)
- Room size and equipment placement within the room relative to room size

The illustration on this page depicts measurable radiation levels within the scanning room while scanning a 32 cm CTDI phantom (body) with the technique shown:
- 140 kV
- 100 mA
- 1 sec
- 40 mm

NOTE: Actual measurements can vary. Expected deviation equals ±15%, except for the 5 mA and 1 mm techniques, where variation may be greater (up to a factor of 2), due to the inherent deviation in small values. The maximum deviation anticipated for tube output equals ±40%.

RADIATION SCATTER - HEAD PHANTOM

NOTE: 140 kV
100 mAs/scan
1 sec
40mm aperture

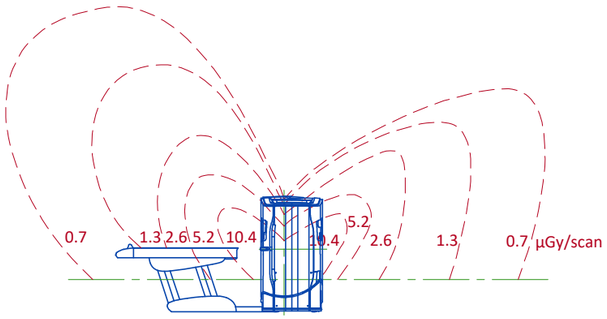

Elevation

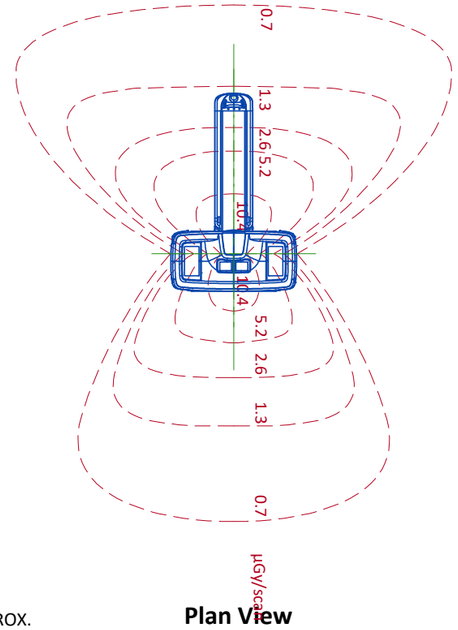

Plan View

APPROX.
0" 50"
0.5 1.0m

RADIATION SCATTER - BODY PHANTOM

NOTE: 140 kV
100 mAs/scan
1 sec
40mm aperture

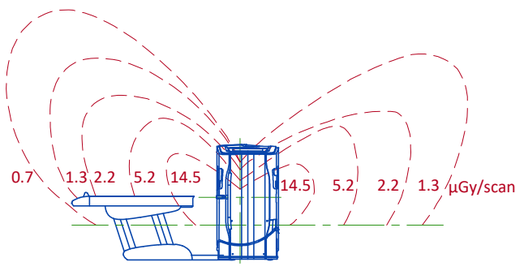

Elevation

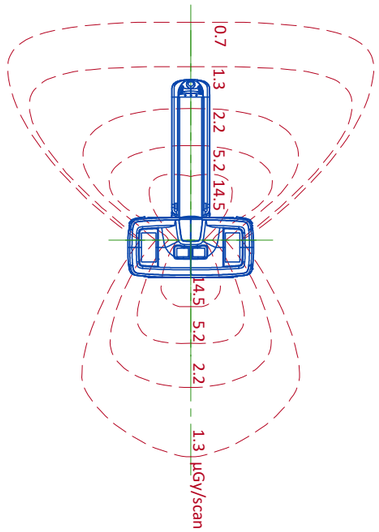

Plan View

APPROX.
0" 50"
0.5 1.0m

GANTRY WITH VT2000/VT2000X TABLE

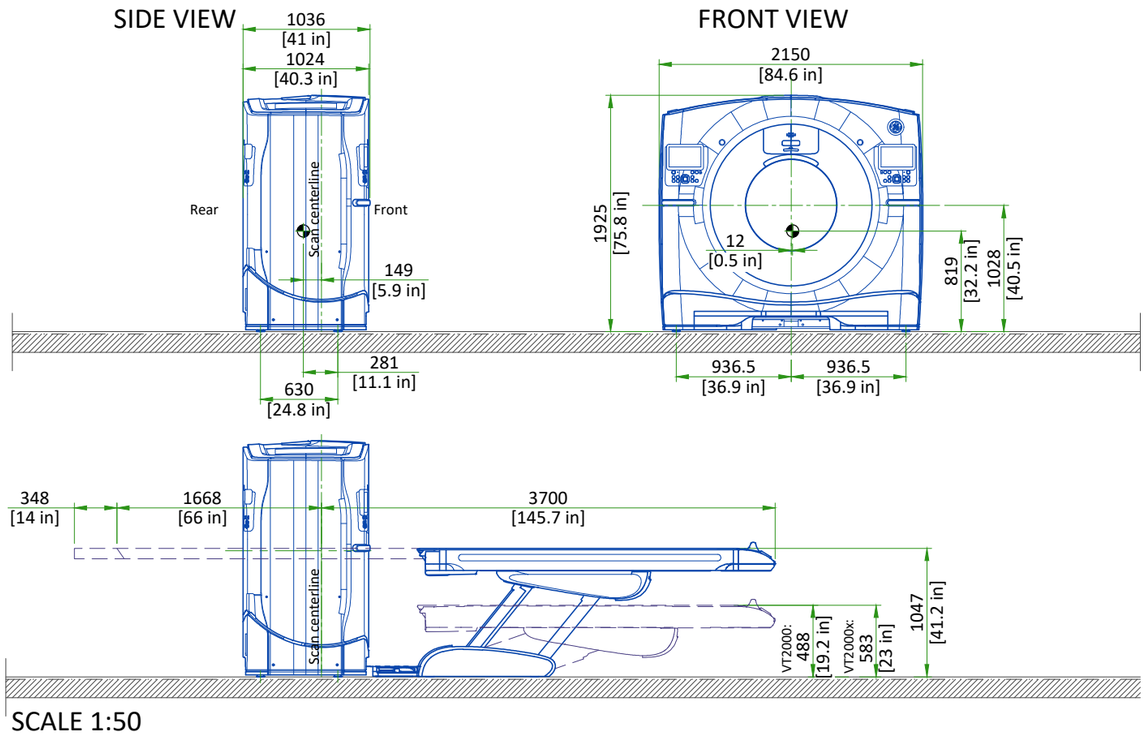

SCALE 1:50

POWER DISTRIBUTION UNIT (PDU)

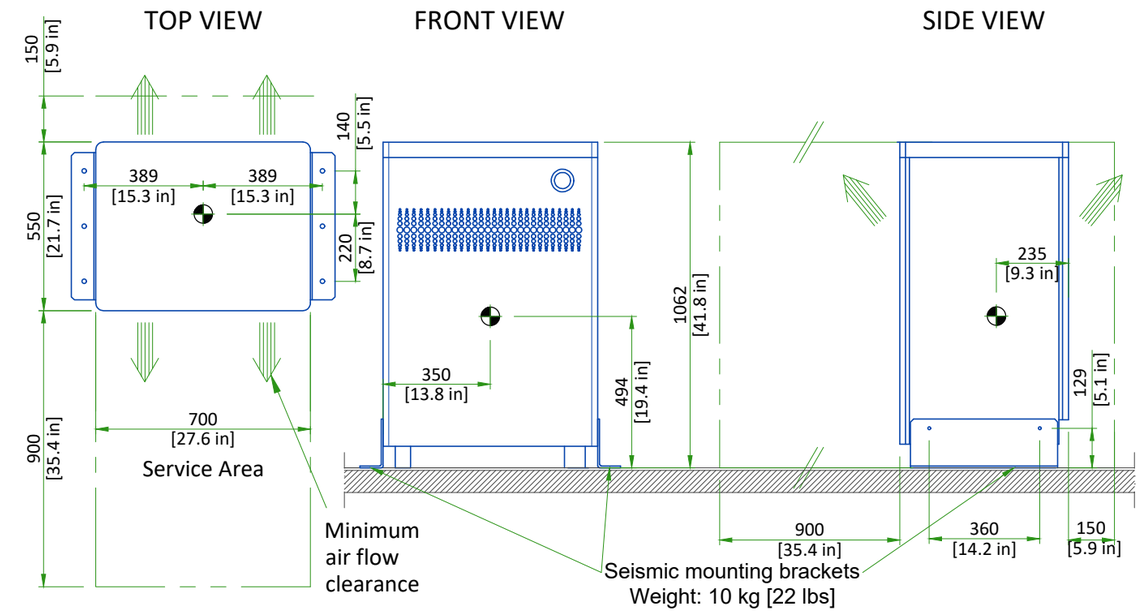

SCALE 1:20

AURORA SWS TABLE

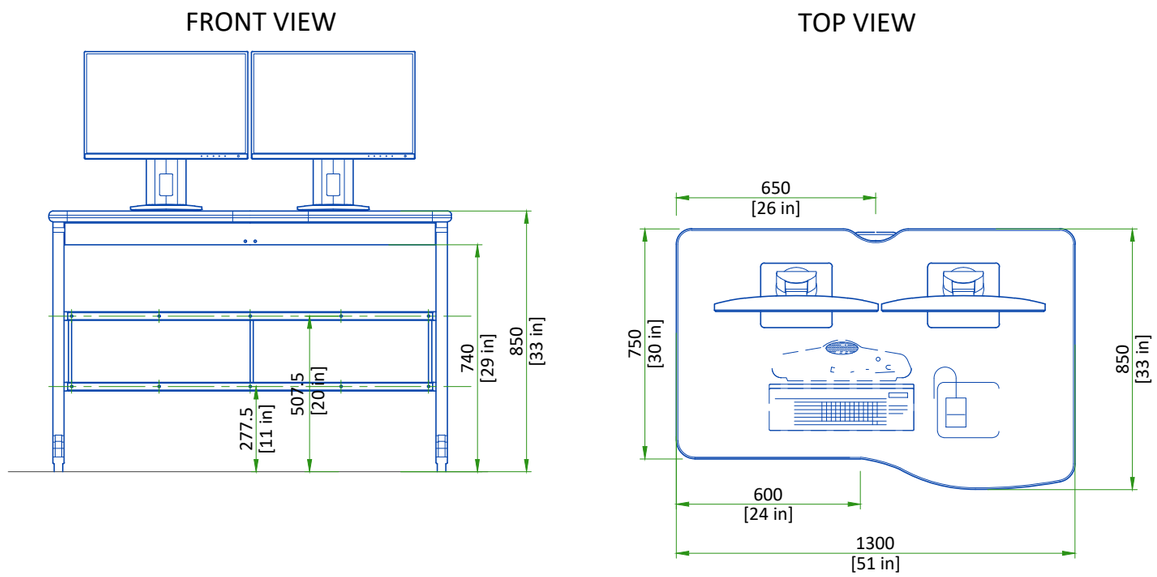

(Table weight: 40 kg)

STANDALONE Z8G4 CONSOLE WITH POWER BOX

STANDALONE Z8G4 CONSOLE

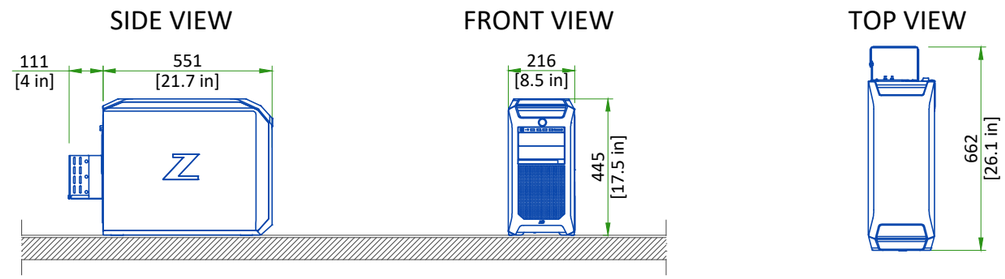

POWER BOX

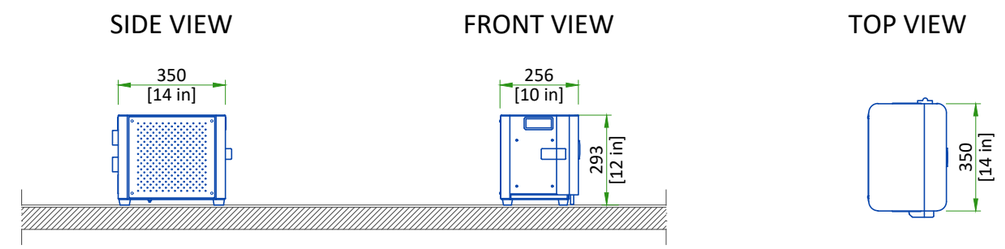

SCALE 1:20

MAIN DISCONNECT PANEL

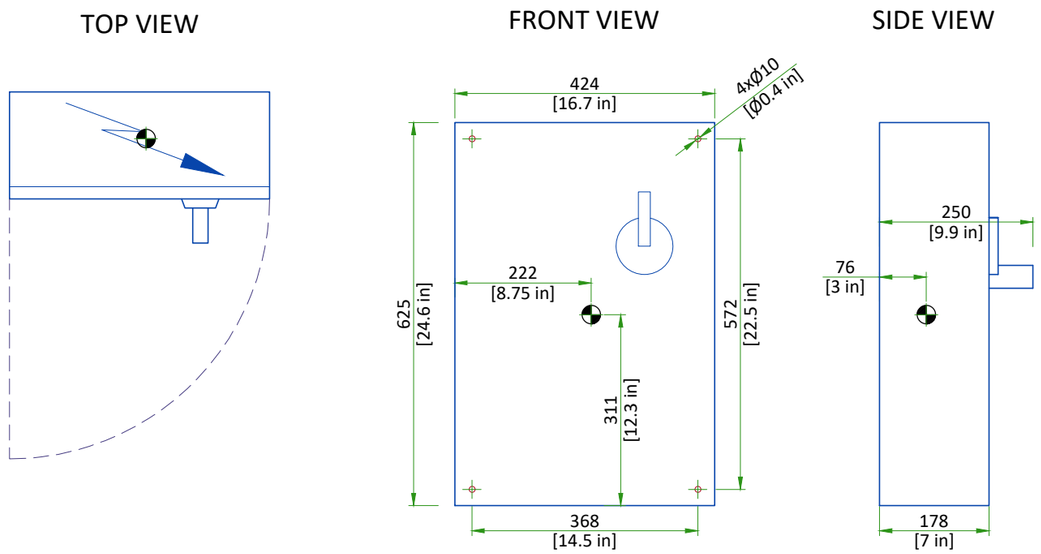

Center of gravity ⊕

SCALE 1:10

DELIVERY

THE CUSTOMER/CONTRACTOR SHOULD:

- Provide an area adjacent to the installation site for delivery and unloading of the GE equipment.
- Ensure that the dimensions of all doors, corridors, ceiling heights are sufficient to accommodate the movement of GE equipment from the delivery area into the definitive installation room.
- Ensure that access routes for equipment will accommodate the weights of the equipment and any transportation, lifting and rigging equipment.
- Ensure that all necessary arrangements for stopping and unloading on public or private property not belonging to the customer have been made.

DIMENSIONS OF DELIVERY WITH DOLLY TRANSPORT EQUIPMENT

EQUIPMENT	DIMENSIONS			WEIGHT	
GANTRY	LENGTH	2910 mm	115 in	2035 kg	4486 lbs
	WIDTH	1290 mm	51 in		
	HEIGHT	2000 mm	79 in		
VT2000/VT2000X TABLE	LENGTH	2997 mm	118 in	632 kg	1390 lbs
	WIDTH	762 mm	30 in		
	HEIGHT	1143 mm	45 in		

GANTRY DELIVERY

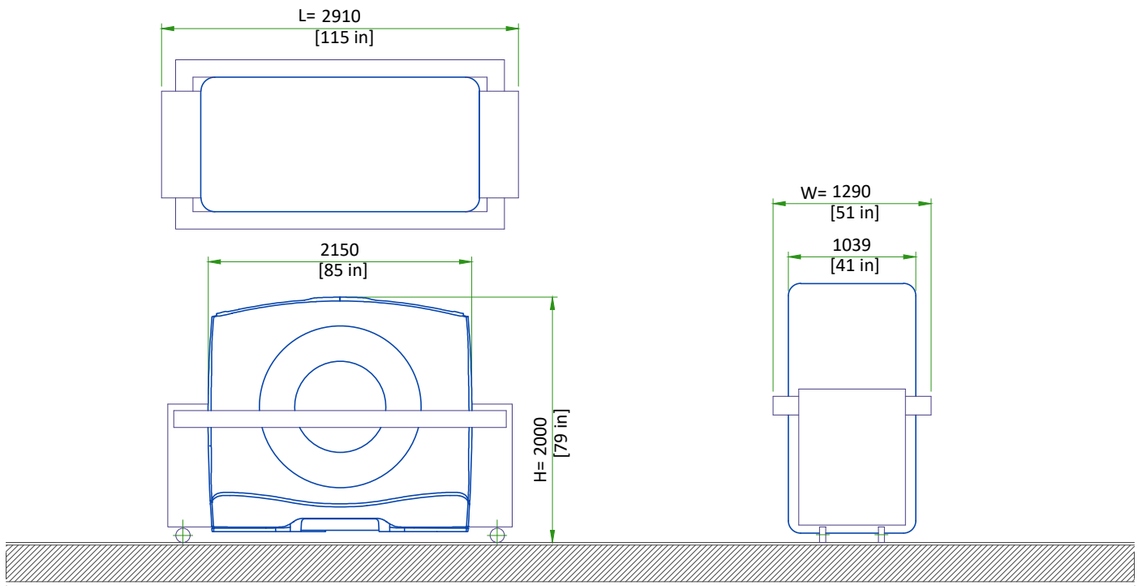

- The gantry is shipped on a dolly equipped with elevating casters (normal shipping configuration).

NOT TO SCALE

STRUCTURAL NOTES

- all steel work and parts necessary to support ceiling mounted equipment is to be supplied by the customer or his contractors.
- methods of support for the steelwork that will permit attachment to structural steel or through bolts in concrete construction should be favored. Do not use concrete or masonry anchors in direct tension.
- all units that are wall mounted or wall supported are to be provided with supports where necessary. Wall supports are to be supplied and installed by the customer or his contractors. See plan and detail sheets for suggested locations and mounting hole locations.
- all ceiling mounted fixtures, air vents, sprinklers, etc. To be flush mounted, or shall not extend more than 1/4" below the finished ceiling.
- floor slabs on which equipment is to be installed must be level to 1/4" in 10'-0"
- dimensions are to finished surfaces of room.
- customers contractor must provide all penetrations in post tension floors.
- customers contractor must provide and install any non-standard anchoring. Documents for standard anchoring methods are included with GE equipment drawings for geographic areas that require such documentation.
- customers contractor must provide and install hardware for "through the floor" anchoring and/or any bracing under access floors. This contractor must also provide floor drilling that cannot be completed because of an obstruction encountered while drilling by the GE installer such as rebar etc.
- it is the customer's responsibility to perform any floor or wall penetrations that may be required. The customer is also responsible for ensuring that no subsurface utilities (e.g., electrical or any other form of wiring, conduits, piping, duct work or structural supports (i.e. post tension cables or rebar)) will interfere or come in contact with subsurface penetration operations (e.g. drilling and installation of anchors/screws) performed during the installation process. To ensure worker safety, GE installers will perform surface penetration operations only after the customer's validation and completion of the "GE surface penetration permit"

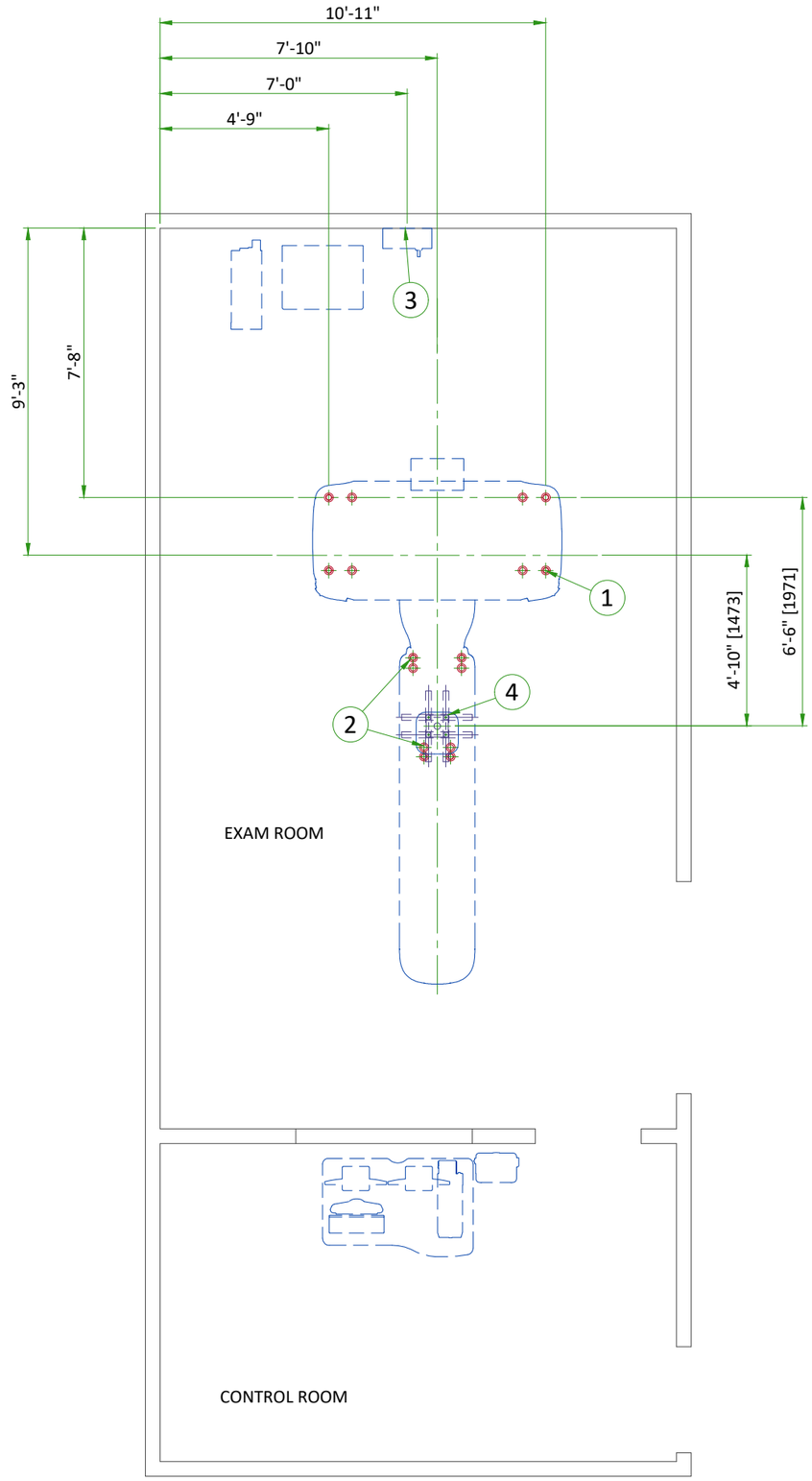

ITEM	DESCRIPTION
	(CONTRACTOR SUPPLIED & INSTALLED)
1	Gantry leveling pads. See Structural Detail
2	Table leveling pads. See Structural Detail
3	Support Backing, locate as shown
4	Unistrut or equivalent for mounting patient positioning camera mounting plate on ceiling. Support designed and supplied by customer. Supports to be at least 2' [610mm] in length and located per dimensions on Positioning Camera Mounting Plate structural detail.

ANCHORING/LOADING DISTRIBUTION TO THE FLOOR

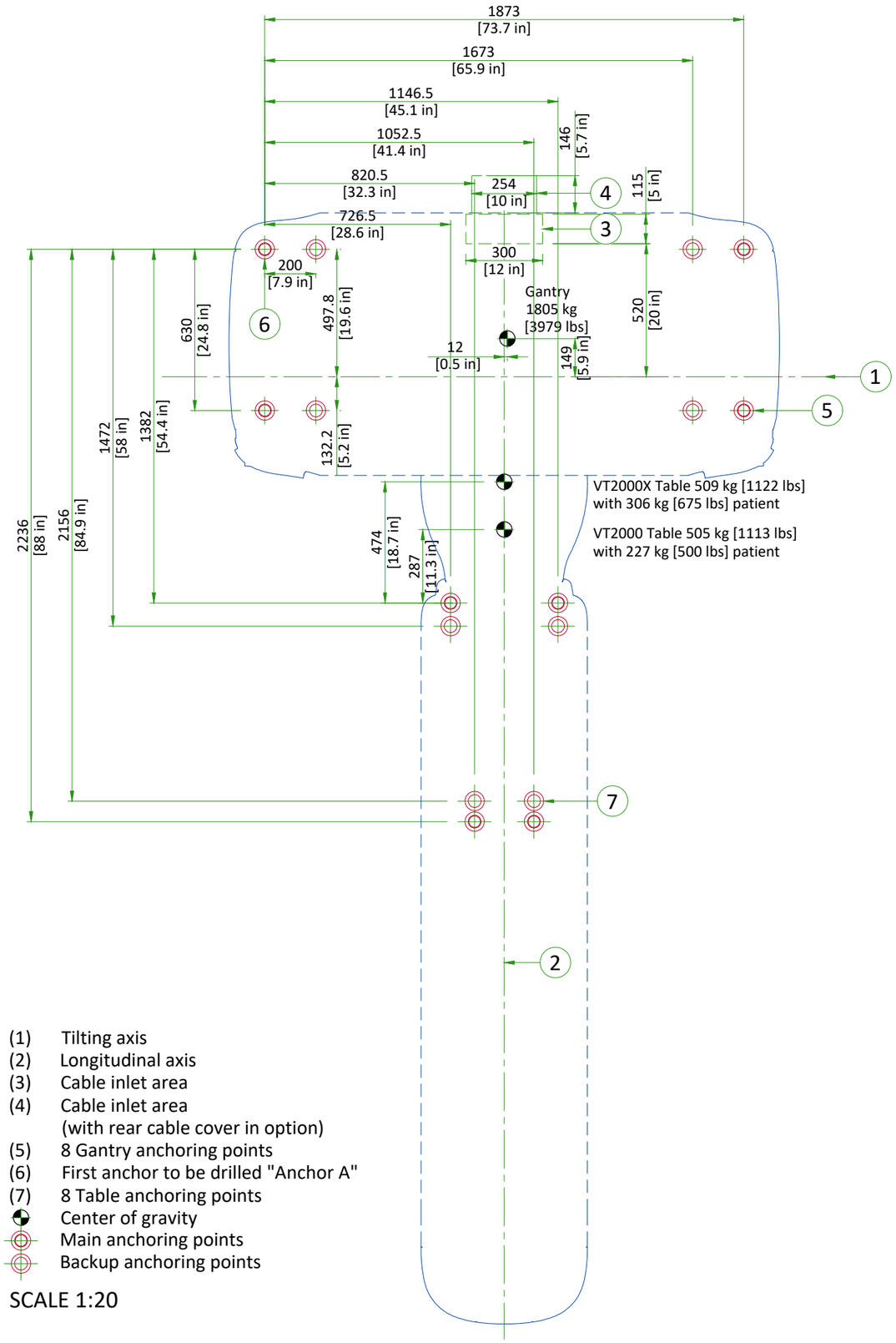

(1) Tilting axis
(2) Longitudinal axis
(3) Cable inlet area
(4) Cable inlet area
(with rear cable cover in option)
(5) 8 Gantry anchoring points
(6) First anchor to be drilled "Anchor A"
(7) 8 Table anchoring points
Center of gravity
Main anchoring points
Backup anchoring points

SCALE 1:20

FLOOR REQUIREMENTS

GE SUPPLIED ANCHORS (2106573)

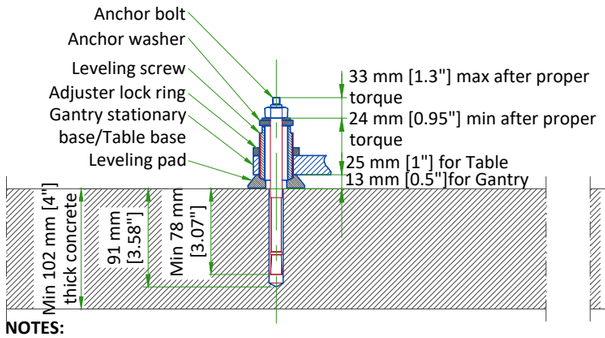

GE SUPPLIED ANCHORS (5487992-2)

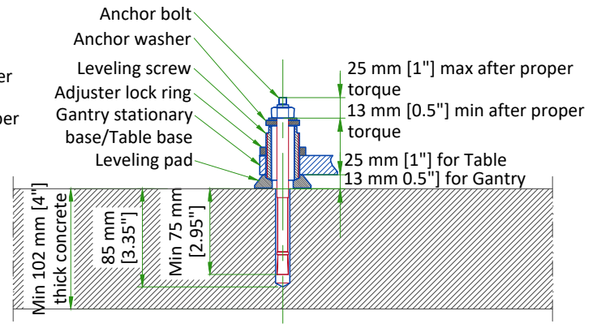

NOTES:

- VT2000X Table must use 2106573 anchors

FINISHED FLOOR REQUIREMENTS

- Installation requires a finish floor in the scan and control rooms
- The floor surface in the scan room directly under the gantry and table must be level.
- The floor levelness tolerance of the floor surface that the gantry and table will rest on is 6 mm [0.24"] over a 3048 mm [10'] distance.
- Shims should not be used to compensate for a floor that does not meet this requirement.
- Eight or more floor covering openings that are 101.6 mm [4"] in diameter are made to ensure the table and gantry rest on a solid surface. These floor penetrations can be sealed if required.
- The distance from central line of anchor to the edge of concrete basement of Gantry/table should not be less than 178 mm [7"].
- These requirements apply to all installation types.

NOT TO SCALE

POSITIONING CAMERA MOUNTING PLATE

JUNCTION PLATE SUPPLIED BY GE

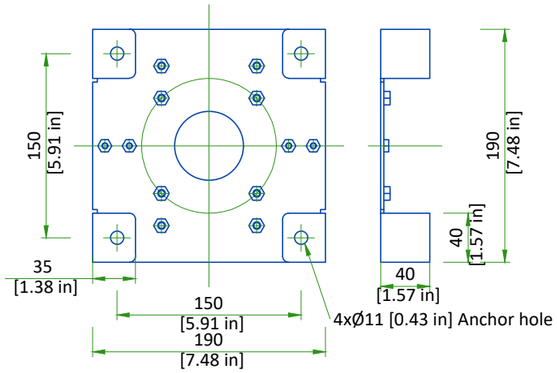

JUNCTION PLATE SUPPLIED BY CUSTOMER

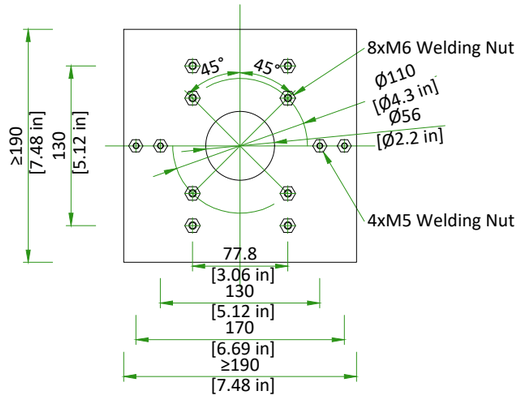

GE will provide a Junction Plate, shipped with the system. If the Junction Plate supplied by GE can not meet the requests of the customer or the building structure, the customer's architect can design and install the Junction Plate (refer to the right side of the detail) with sufficient strength to hold the camera assembly.

Material: Steel material with a min. tensile strength of 375 MPa
Plate thickness: 2.5 mm [0.10 in]

Welding Nut: Meet GB-T 13681-1992 requirement or equivalent		
	M5	M6
Thickness (mm [in])	3.7-4 [0.15-0.16]	4.7-5 [0.19-0.20]
Pledge load (N)	11000	15500

NOTE: The system manufacturer will NOT inspect and test that the fixing methods between the Junction Plate and the building structure meet the loading capacity specified (recommend a 6x safety factor), which is the customer's responsibility. The weight of the camera assembly is approximately 3.2 kg [7.05 lbs], suggest the safety load on the Junction Plate is no less than 20 kg [44.09 lbs]. If the Anchor Bolt is not applicable for site requirement, the customer's architect can consider other methods (such as welding...) to fix the Junction Plate. Presetting for site preparation of the Camera installation, customer had better install the Junction Plate in advance before the system installation.

NOT TO SCALE

POSITIONING CAMERA INSTALLATION POSITION

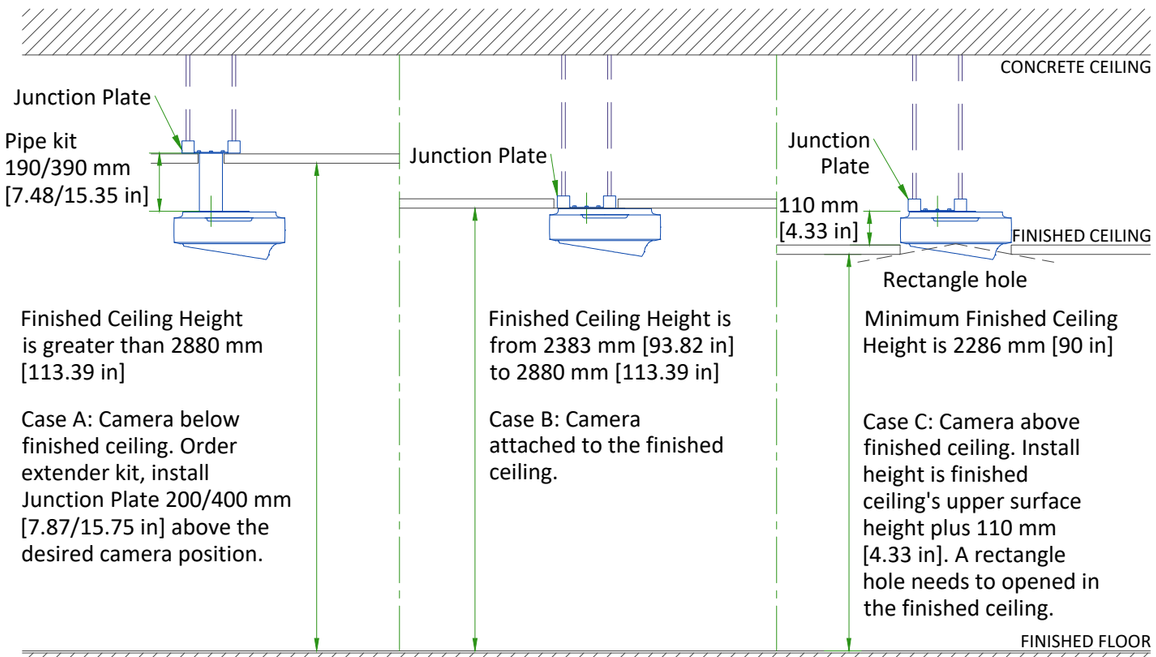

Finished Ceiling Height is greater than 2880 mm [113.39 in]

Case A: Camera below finished ceiling. Order extender kit, install Junction Plate 200/400 mm [7.87/15.75 in] above the desired camera position.

Finished Ceiling Height is from 2383 mm [93.82 in] to 2880 mm [113.39 in]

Case B: Camera attached to the finished ceiling.

Minimum Finished Ceiling Height is 2286 mm [90 in]

Case C: Camera above finished ceiling. Install height is finished ceiling's upper surface height plus 110 mm [4.33 in]. A rectangle hole needs to opened in the finished ceiling.

NOT TO SCALE

CUSTOMER/CONTRACTOR SUPPLIED MOUNTING PLATE

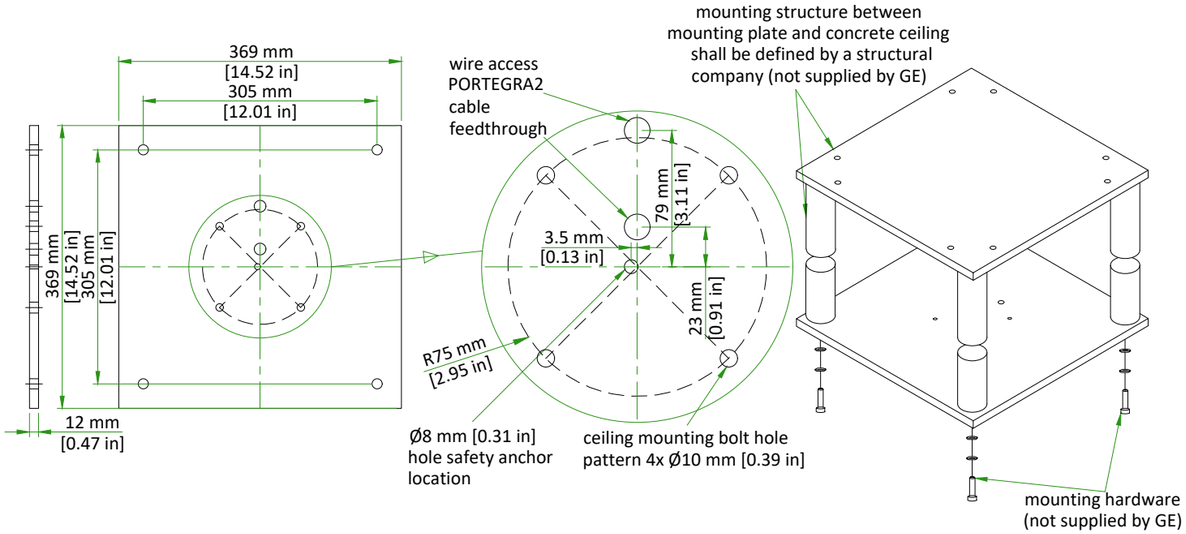

The exact location of all five drill holes for MAVIG column has to be kept, otherwise installation can't be accomplished.
Column flange and safety chain fixings to concrete or to structure other than MAVIG anchoring plate or MAVIG bridge shall be defined by a structural company.
All design and pre-installation activity must be done in accordance of the MAVIG Installation manual.
Contact your GE Project Manager for OEM documentation. Installation of mounting plate performed by GE or a GE sub-contractor.

NOT TO SCALE

CEILING SUSPENSION DISCLAIMER

Safety and precautionary comments:

Only qualified, licensed technicians can perform electrical connections, installation, removal and repair. It is strongly recommended that at least two persons perform the installation.

Installing the system: Prior to installation, a structural engineer must confirm that the mounting structure is strong enough to provide proper support for the entire system and any attached end devices. Installation must be completed according to local building codes.

Determination of required installation hardware and torque values for installation of the ceiling column and ceiling track is the sole responsibility of the structural engineer.

Ceiling mounted systems must be installed properly. Failure to follow the instructions provided may lead to a potentially dangerous and unstable condition of the system.

GE and/or MAVIG is not responsible for unauthorized modifications made to the system or use of the system for unintended purposes. GE and/or MAVIG cannot be held liable for improper operation and modifications. Since improper modifications may impair proper operation, safety or reliability of the system, product modifications require written authorization from MAVIG.

Under GE responsibility or under Customer responsibility, for all pre-installations, whatever is the supporting structure (bridge, chair, Unistrut channel, other channels, direct anchorage in concrete, transversal beam, etc. …) a certificate must be obtained from a structural engineer.

This certificate shall include the definition of fasteners and of their tightening torque, especially for the non-standard cases described in MAVIG PIM and for which the standard anchoring/screws delivered with product shall not be used but shall be defined (and implemented in most cases) by the structural company.

WARNING:

It is prohibited to alter the length of the ceiling column or remove any securing screws.

SUSPENSION COLUMN LENGTHS AND INSTALLATION DETAILS

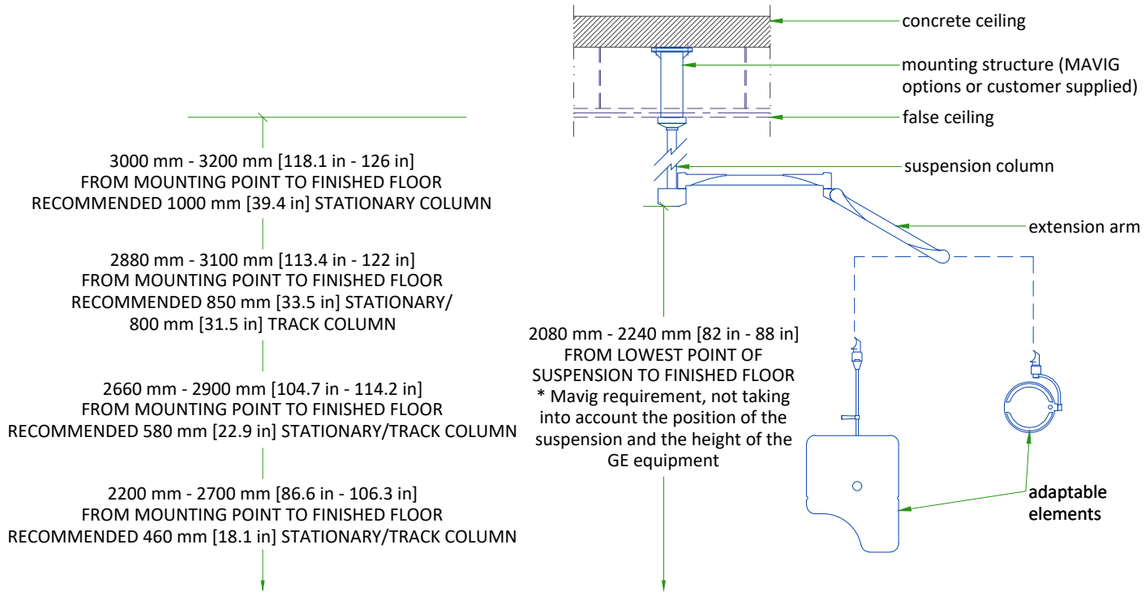

- Available column lengths might differ, please refer to the GE commercial catalog for current selection options
- For rooms with higher mounting point than 3200 mm [126 in], a ceiling construction between structural ceiling and vertical column is suggested which needs to be designed by a structural engineer
- All design and pre-installation activity must be done in accordance of the MAVIG Installation manual
- Contact your GE Project Manager for OEM documentation
- Installation of mounting plate performed by GE or a GE sub-contractor

NOT TO SCALE

PORTEGRA2 COLUMN ASSEMBLY

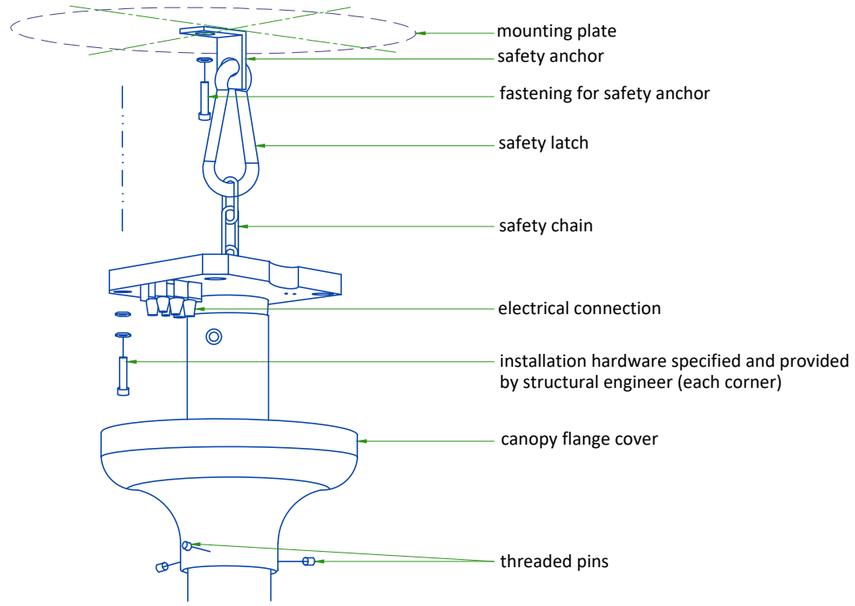

- Safety chain shall be always attached.
- Do not use shims between column and mounting surface.

All design and pre-installation activity must be done in accordance of the MAVIG Installation manual.
Contact your GE Project Manager for OEM documentation. Installation of mounting plate performed by GE or a GE sub-contractor.

NOT TO SCALE

TEMPERATURE AND HUMIDITY SPECIFICATIONS

IN-USE CONDITIONS

	EXAM ROOM			CONTROL ROOM		
	Min	Recommended	Max	Min	Recommended	Max
Temperature (up to 2400 m [7875 ft])	18°C	22°C	26°C	18°C	22°C	26°C
	64°F	72°F	79°F	64°F	72°F	79°F
Temperature (up to 3000 m [9843 ft])	18°C	22°C	25°C	18°C	22°C	25°C
	64°F	72°F	77°F	64°F	72°F	77°F
Temperature (up to 4000 m [13124 ft])	18°C	22°C	23°C	18°C	22°C	23°C
	64°F	72°F	73.4°F	64°F	72°F	73.4°F
Relative humidity (1)	30% to 60%			30% to 60%		

STORAGE CONDITIONS

Temperature	0°C to +30°C
	32°F to +86°F
Temperature gradient	**≤ 3°C/h**
	≤ 5.4°F/h
Relative humidity (1)	20% to 60%
Humidity gradient	**≤ 5%/h**

Storage longer than 6 months is not recommended.
(1) Non-condensing

AIR RENEWAL

According to local standards.

NOTE
In case of using air conditioning systems that have a risk of water leakage it is recommended not to install it above electric equipment or to take measures to protect the equipment from dropping water.

HEAT DISSIPATION DETAILS

ROOM	DESCRIPTION	Max (kW)	Max (BTU)
Exam Room	Gantry	5.48	18700
	Patient Table (Without patient)	0.30	1030
	TOTAL	**6**	**19730**
Exam Room or Technical Room*	Power Distribution Unit	1.00	3400
	Partial UPS - Liebert GXT4	0.83	2828
	TOTAL	**2**	**6228**
Control Room	Standalone Console	0.84	2860
	LCD Monitor (Total amount of 2 monitors)	0.10	340
	TOTAL	**1**	**3200**

*Technical Room is not mandatory, the placements of these elements are recommended in the Exam Room.

ELECTRICAL NOTES

1. All wires specified shall be copper stranded, flexible, thermo-plastic, color coded, cut 10 foot long at outlet boxes, duct termination points or stubbed conduit ends. All conductors, power, signal and ground, must be run in a conduit or duct system. Electrical contractor shall ring out and tag all wires at both ends. Wire runs must be continuous copper stranded and free from splices.

1.1. Aluminum or solid wires are not allowed.

2. Wire sizes given are for use of equipment. Larger sizes may be required by local codes.
3. It is recommended that all wires be color coded, as required in accordance with national and local electrical codes.
4. Conduit sizes shall be verified by the architect, electrical engineer or contractor, in accordance with local or national codes.
5. Convenience outlets are not illustrated. Their number and location are to be specified by others. Locate at least one convenience outlet close to the system control, the power distritbution unit and one on each wall of the procedure room. Use hospital approved outlet or equivalent.
6. General room illumination is not illustrated. Caution should be taken to avoid excessive heat from overhead spotlights. Damage can occur to ceiling mounting components and wiring if high wattage bulbs are used. Recommend low wattage bulbs no higher than 75 watts and use dimmer controls (except MR). Do not mount lights directly above areas where ceiling mounted accessories will be parked.
7. Routing of cable ductwork, conduits, etc., must run direct as possible otherwise may result in the need for greater than standard cable lengths (refer to the interconnection diagram for maximum usable lengths point to point).
8. Conduit turns to have large, sweeping bends with minimum radius in accordance with national and local electrical codes.
9. A special grounding system is required in all procedure rooms by some national and local codes. It is recommended in areas where patients might be examined or treated under present, future, or emergency conditions. Consult the governing electrical code and confer with appropriate customer administrative personnel to determine the areas requiring this type of grounding system.
10. The maximum point to point distances illustrated on this drawing must not be exceeded.
11. Physical connection of primary power to GE equipment is to be made by customers electrical contractor with the supervision of a GE representative. The GE representative would be required to identify the physical connection location, and insure proper handling of GE equipment.
12. GEHC conducts power audits to verify quality of power being delivered to the system. The customer's electrical contractor is required to be available to support this activity.

- All junction boxes, conduit, duct, duct dividers, switches, circuit breakers, cable tray, etc., are to be supplied and installed by customers electrical contractor.
- Conduit and duct runs shall have sweep radius bends
- Conduits and duct above ceiling or below finished floor must be installed as near to ceiling or floor as possible to reduce run length.
- Ceiling mounted junction boxes illustrated on this plan must be installed flush with finished ceiling.
- All ductwork must meet the following requirements:

1.Ductwork shall be metal with dividers and have removable, accessible covers.
2.Ductwork shall be certified/rated for electrical power purposes.
3.Ductwork shall be electrically and mechanically bonded together in an approved manner.
4.PVC as a substitute must be used in accordance with all local and national codes.

- All openings in raceway and access flooring are to be cut out and finished off with grommet material by the customers contractor.
- General contractor to insert pull cords for all cable run conduits between the equipment room and the operators control room.
- 10 foot pigtails at all junction points.
- Grounding is critical to equipment function and patient safety. Site must conform to wiring specifications shown on this plan.

CONNECTIVITY REQUIREMENTS

Broadband Connections are necessary during the installation process and going forward to ensure full support from the Engineering Teams for the customers system. Maximum performance and availability for the customers system is maintained and closely monitored during the lifetime of the system.

Proactive and reactive maintenance is available utilizing the wide range of digital tools using the connectivity solutions listed below:

- Site-to-Site VPN/GE Solution
- Site-to-Site VPN/Customer Solution
- Connection through Dedicated Service Network
- Internet Access - connectivity for InSite 2.0

The requirements for these connectivity solutions are explained in the broadband solutions catalogue (separate document).

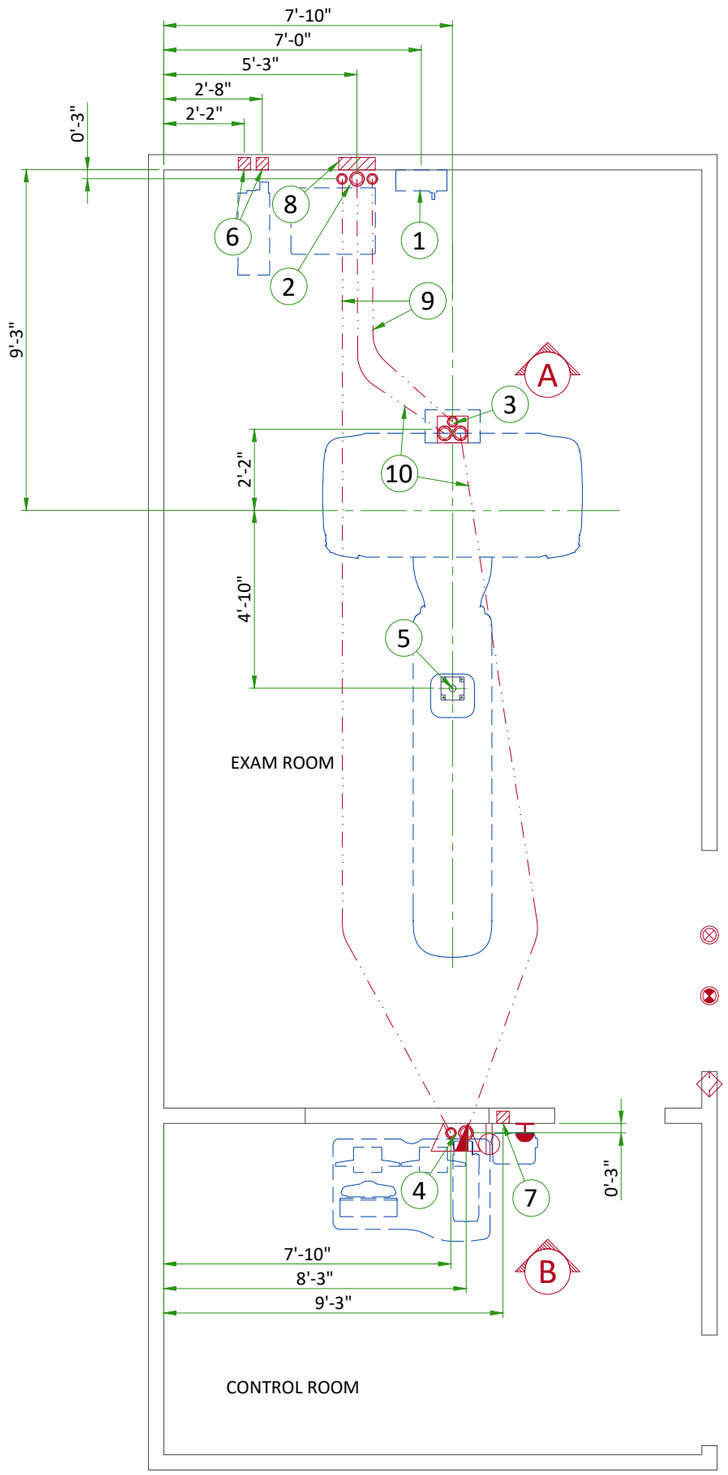

ITEM	DESCRIPTION
1	Main disconnect panel
2	Suitable bushings & lock nuts (Power Distribution Unit)
3	Suitable bushings & lock nuts (Gantry)
4	Suitable bushings & lock nuts (Operator's Console)
5	Cable inlet above ceiling (Express Camera)
6	4" x 4" x 4" [100 x 100 x 100] box (Partial UPS)
7	4" x 4" x 4" [100 x 100 x 100] box (Express Camera)
8	12" x 16" x 4" [150 x 150 x 100] box (Power Distribution Unit)
9	2 1/2" [63] conduit below floor
10	3 1/2" [90] conduit below floor

ITEM	QTY	Outlet Legend for GE Equipment
△		Dedicated telephone line(s)
◭		Network outlet
		Duplex hospital grade, dedicated wall outlet 120-v, single phase power
		System emergency off (SEO), (recommended height 1.2m [48"] above floor)
⊗		X-Ray room warning light control panel
		X-Ray Light
		Door interlock switch (needed only if required by state/local codes)

Additional Conduit Runs
(Contractor Supplied and Installed)

From (Bubble # / Item)		To (Bubble # / Item)		Qty	Size In.	Size mm
	3 Phase Power	1	Main Disconnect Panel	1	As req'd	As req'd
1	Main Disconnect Panel		Emergency Off	1	1/2	13
		8	Power Distribution Unit	1	As req'd	As req'd
8	Power Distribution Unit		Door Switch	1	1/2	13
			Warning Light Control	1	1/2	13
	Warning Light			1	1/2	13
	1 Phase Power			1	1/2	13
5	Express Camera	7	Operator's Console	1	1 1/2	38
1	Main Disconnect Panel	6	Partial UPS	1	1 1/4	30
8	Power Distribution Unit			1	2	50

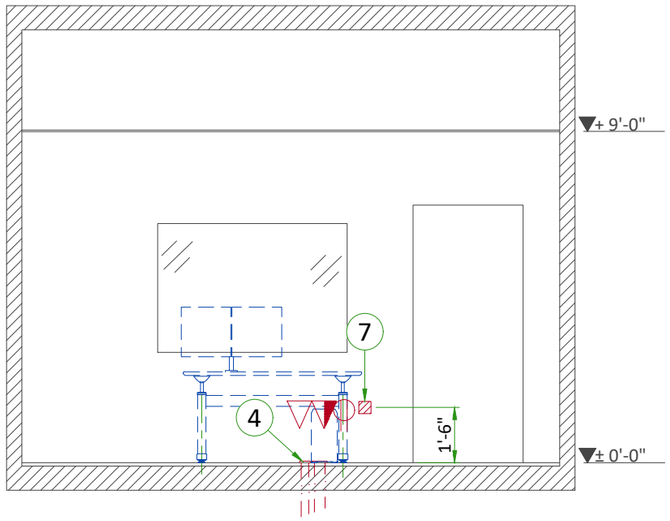

A

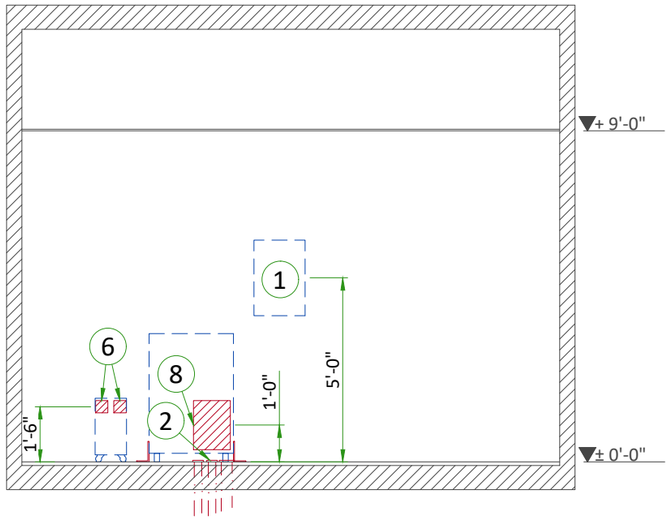

B

POWER REQUIREMENTS

POWER SUPPLY	**3 PHASES+G** **200/220/240/380/400/420/440/460/480 V ± 10%**
FREQUENCIES	**50/60 Hz ± 3 Hz**
MAXIMUM POWER DEMAND	**100 kVA**
AVERAGE (CONTINUOUS) POWER DEMAND	**20 kVA**
POWER FACTOR	**0.85**

- Power supply should come into a main disconnect panel (MDP) containing the protective units and controls.
- The section of the supply cable should be calculated in accordance with its length and the maximum permissible voltage drops.
- There must be discrimination between supply cable protective device at the beginning of the installation (main low-voltage transformer side) and the protective devices in the MDP.

SUPPLY CHARACTERISTICS

- Power input must be separate from any others which may generate transients (elevators, air conditioning, radiology rooms equipped with high speed film changers...).
- All equipment (lighting, power outlets, etc...) installed with GE system components must be powered separately.
- Phase imbalance 2% maximum.
- Transients must be less than 1500V peak. (on a 400V line)

GROUND SYSTEM

- System of equipotential grounding.
- Equipotential: The equipotential link will be by means of an equipotential bar. This equipotential bar should be connected to the protective earth conductors in the ducts of the non GE cableways and to additional equipotential connections linking up all the conducting units in the rooms where GE system units are located.

CABLES

- Power and cable installation must comply with the distribution diagram.
- All cables must be isolated and flexible, cable color codes must comply with standards for electrical installation.
- The cables from signaling and remote control (Y, SEO, L...) will go to MDP with a pigtail length of 1.5m, and will be connected during installation. Each conductor will be identified and isolated (screw connector).

CABLEWAYS

The general rules for laying cableways should meet the conditions laid down in current standards and regulations, with regard to:

- Protecting cables against water (cableways should be waterproof).
- Protecting cables against abnormal temperatures (proximity to heating pipes or ducts).
- Protecting cables against temperature shocks.
- Replacing cables (cableways should be large enough for cables to be replaced).
- Metal cableways should be grounded.

POWER DISTRIBUTION

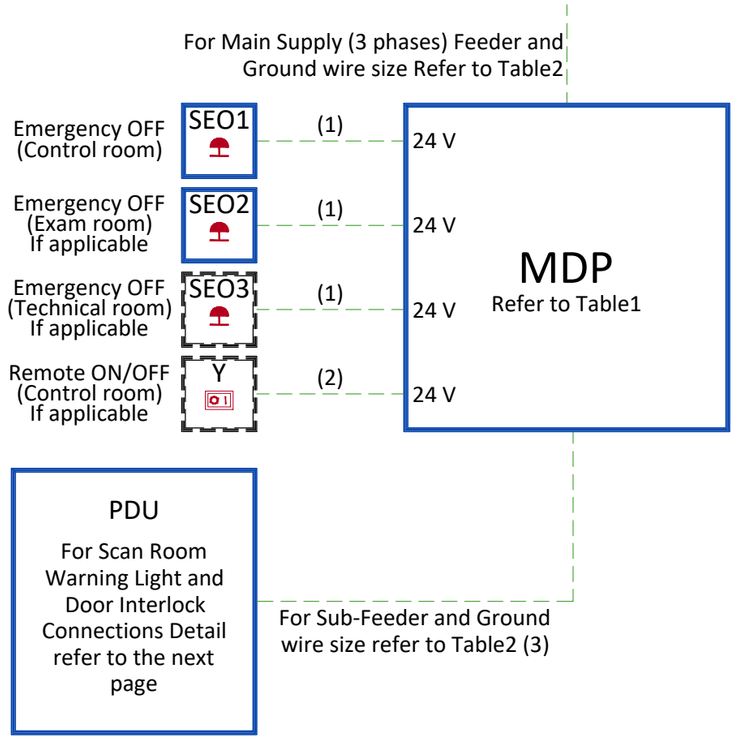

Cable SUPPLIED BY CUSTOMER
Cable SUPPLIED BY GE
Equipment SUPPLIED BY CUSTOMER
Equipment SUPPLIED BY GE
MDP Main Disconnect Panel
PDU Power Distribution Unit
SEO Emergency OFF Button latching twist-to release style with two normally closed (NC) contacts
Y System Remote Control with "ON" and "OFF" buttons

Table1:

GE Supplied Main Disconnect Panel (MDP)		
Region	**CAT number**	**Amps**
Global except EMEA(440~480 V)	E4502BB	90
Global except EMEA(380~420 V)	E4502BC	110
EMEA(380~420 V)	E45021BB (3)	125

Table2:

Feeder Table									
The information below assumes the use of copper wire, rated 75 C and run in steel conduit. All ampacity is determined in accordance with the National Electrical Code (NFPA 70), Table 310-16 (2002). The ampacity of the circuit protection device listed above determines the minimum feeder size, except where total source regulation limits require a larger size.									
Feeder length from Power Substation to MDP - ft (m)	**Minimum Wire Size, AWG or MCM (mm²)/VAC**								
	200 VAC	220 VAC	240 VAC	380 VAC	400 VAC	420 VAC	440 VAC	460 VAC	480 VAC
50 (15)	1/0 (55)	1/0 (55)	1/0 (55)	2 (35)	2 (35)	3 (30)	3 (30)	3 (30)	3 (30)
100 (30)	2/0 (70)	1/0 (55)	1/0 (55)	2 (35)	2 (35)	3 (30)	3 (30)	3 (30)	3 (30)
150 (46)	4/0 (100)	3/0 (85)	3/0 (85)	2 (35)	2 (35)	3 (30)	3 (30)	3 (30)	3 (30)
200 (61)	5/0 (125)	4/0 (100)	4/0 (100)	2 (35)	2 (35)	3 (30)	3 (30)	3 (30)	3 (30)
250 (76)	6/0 (170)	5/0 (125)	5/0 (125)	1 (45)	1 (45)	2 (35)	2 (35)	2 (35)	3 (30)
300 (91)	7/0 (215)	6/0 (170)	5/0 (125)	1/0 (55)	1/0 (55)	1 (45)	1 (45)	2 (35)	2 (35)
350 (107)	8/0 (275)	7/0 (215)	6/0 (170)	2/0 (70)	1/0 (55)	1/0 (55)	1 (45)	1 (45)	1 (45)
400 (122)	8/0 (275)	7/0 (215)	7/0 (215)	2/0 (70)	2/0 (70)	1/0 (55)	1/0 (55)	1/0 (55)	1 (45)
Sub-Feeder length from MDP to PDU - ft (m)									
32 (9.7536)	1/0 (55)	1/0 (55)	1/0 (55)	2 (35)	2 (35)	3 (30)	3 (30)	3 (30)	3 (30)
Grounding									
Run a dedicated 1/0 [55 mm²] or larger insulated copper ground wire from the power source to the MDP and from MDP to the PDU. Run the ground wire in the same raceway with the three-phase wires.									

Notes :

(1) Wire size: 2x2mm² [14AWG] and 1x2mm² [14AWG] GND

(2) Wire size: 6x2mm² [14AWG] and 1x2mm² [14AWG] GND

(3) GE supplied MDP option E45021BB includes a 10 meter long power cable (H07RN-F) with wire size 4x50mm² and a 50 meter long control cable with wire size 2x1.5mm²

SCAN ROOM WARNING LIGHT AND DOOR INTERLOCK

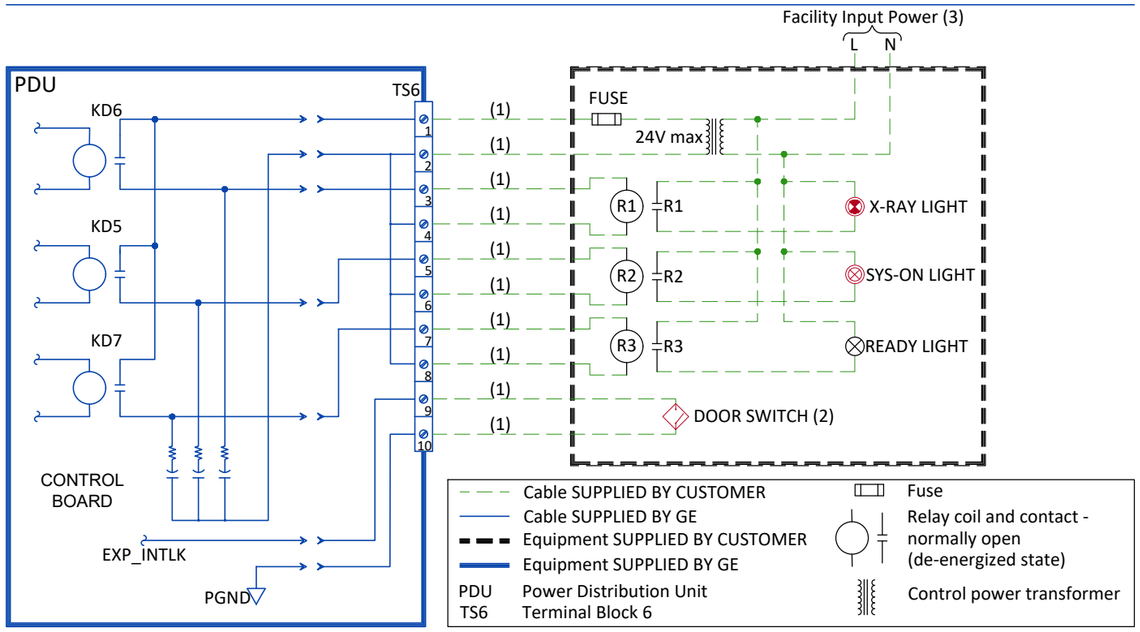

Notes :

(1) Wire size: 2mm² [14 AWG] at 24V

(2) Door Interlock circuit is jumpered out if a door switch is not provided.

(3) Grounding not shown on the detail, but must comply with local codes.

INTERCONNECTIONS

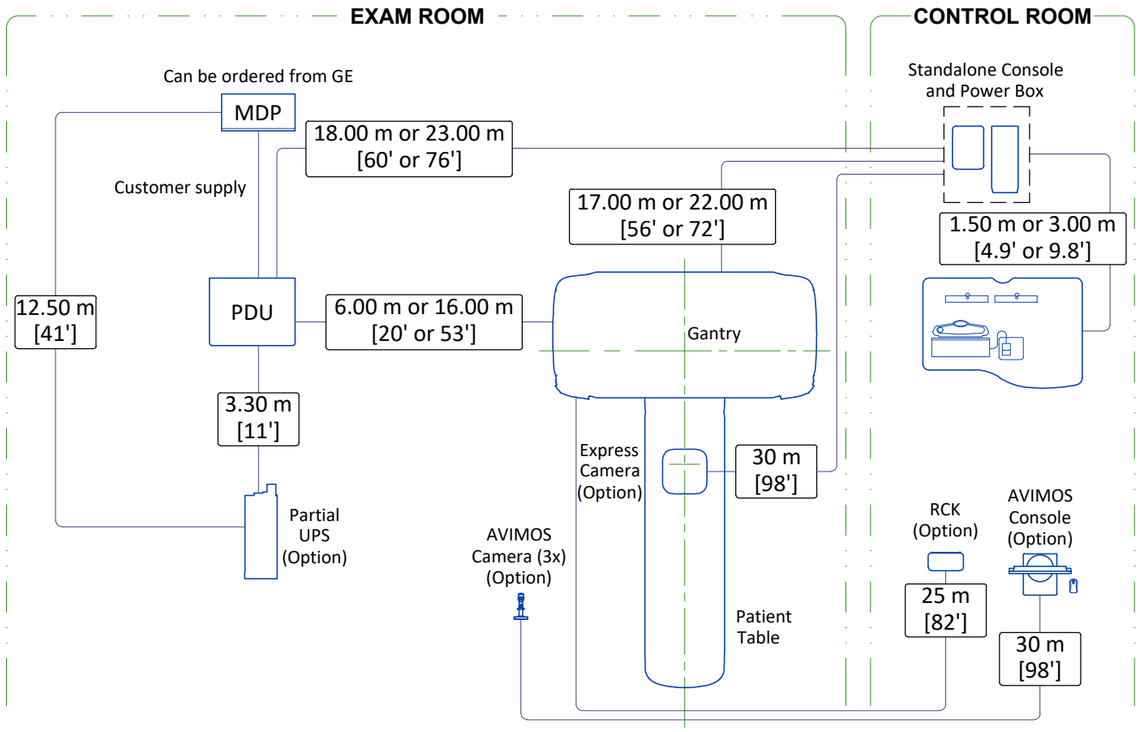

TYPICAL CABLE MANAGEMENT

CONDUIT IN THE FLOOR

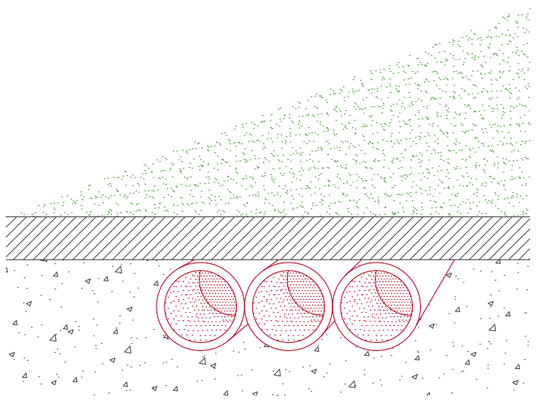

NOT TO SCALE