REV	DATE	MODIFICATIONS
E	08/APR/2021	Initial release per PIM revision 8
D	01/FEB/2021	Initial release per PIM revision 7
C	16/SEP/2019	Update to revision 6
B	20/JUN/2019	Update to revision 5
A	07/Jan/2019	Initial release per PIM revision 4

SITE NAME

CITY

COUNTRY

01 - Cover Sheet
02 - Equipment Layout
03 - Structural - Electrical Layout
04 - Floor Structural Details
05 - Radiation Protection Layout
06 - Radiation Protection Details
07 - Power Requirements - Power Distribution
08 - HVAC - Warning Light
09 - Environment - Interconnections
10 - Equipment Dimensions
11 - Delivery
12 - Disclaimer - Site Readiness

A mandatory component of this drawing set is the GE Healthcare Pre Installation manual. Failure to reference the Pre Installation manual will result in incomplete documentation required for site design and preparation.
Pre Installation documents for GE Healthcare products can be accessed on the web at: www.gehealthcare.com/siteplanning

GE does not take responsibility for any damages resulting from changes on drawings made by others. Errors may occur by not referring to the complete set of final issue drawing. GE cannot accept responsibility for any damage due to the partial use of GE final issue drawings, however caused. All dimensions are in millimeters unless otherwise specified. Do not scale from printed pdf files. GE accepts no responsibility or liability for defective work due to scaling from these drawings.

GE Healthcare

GE Contact Name
Phone number
Email address

REVOLUTION ACT TYPICAL STUDY

Drawn by	Verified by	Concession	S.O. (GON)	PIM Manual	Rev
Drawn by	Verified by	-	-	5487127-1EN	8

Format	Scale	File Name	Date	Sheet
A3	1:50	EN-CT-TYP-REVOLUTION_ACT.DWG	08/JUL/2021	01/12

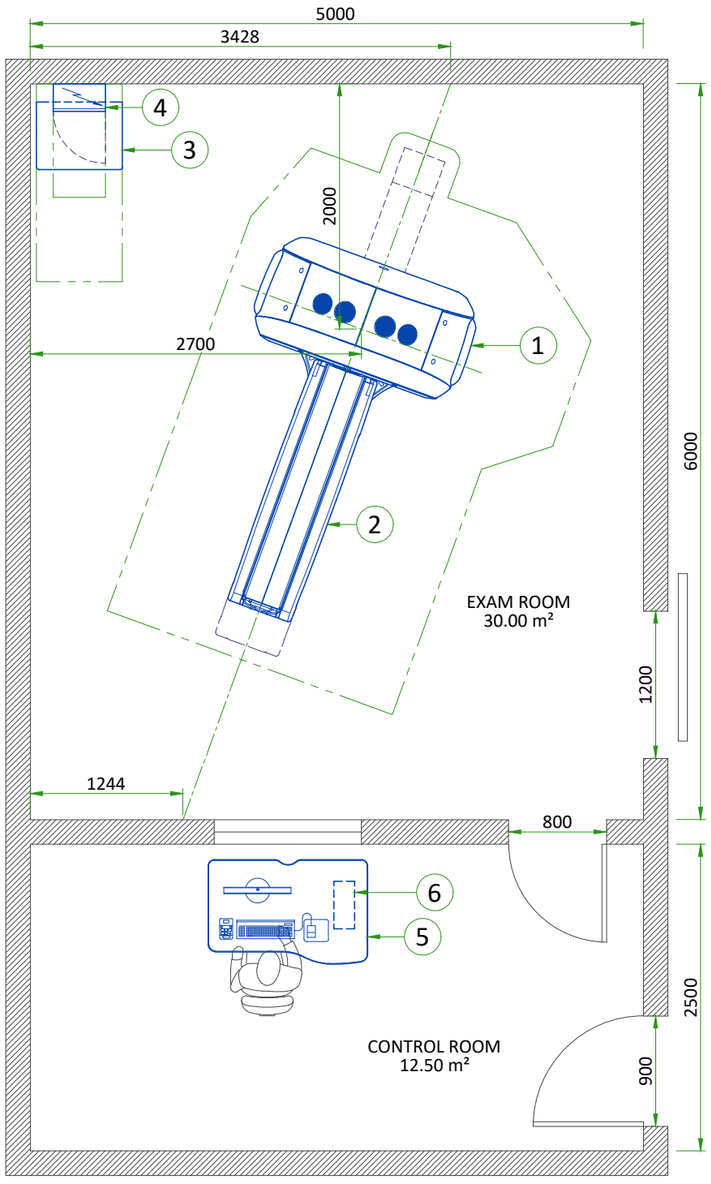

EQUIPMENT LAYOUT

ITEM	DESCRIPTION	DIMENSIONS LxWxH (mm)	WEIGHT (kg)
1	GANTRY	1783x921x1741	830
2	UP/DOWN TABLE	568x3658x900	340
3	POWER DISTRIBUTION UNIT (PDU)	700x550x1062	300
4	POWER DISTRIBUTION BOX (PDB)	225x424x929	33
5	AURORA SWS TABLE	1300x850x850	40
6	OPERATOR CONSOLE	386x169x445	10.2

WALL - ACCORDING TO RECEIVED DRAWING

EXAM ROOM HEIGHT	
FINISHED FLOOR TO SLAB HEIGHT	-
FALSE CEILING HEIGHT	min. 2.29 m

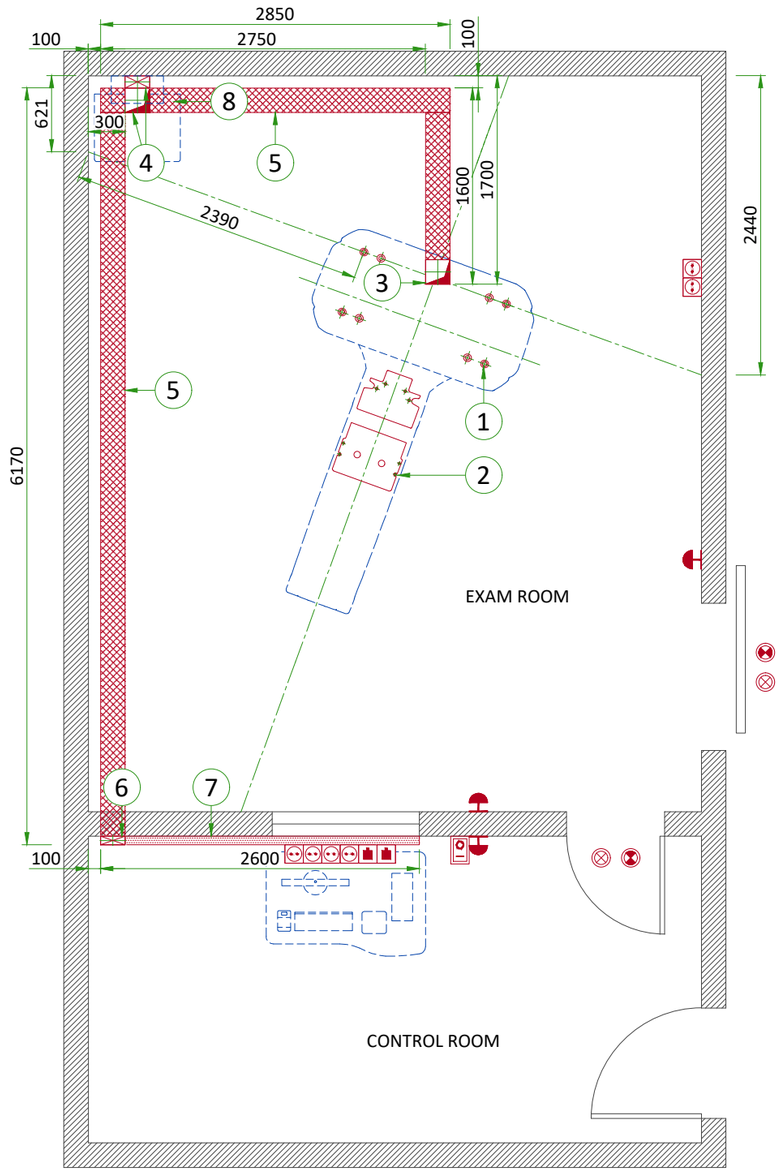

STRUCTURAL - ELECTRICAL LAYOUT

ITEM	QTY	DESCRIPTION
1		Gantry anchoring (see Structural Details)
2		Table anchoring (see Structural Details)
3		200x200 opening on the floor
4		200x200 cable inlet and 200x100 vertical duct from the floor to PDB (h=1.1m)
5		200x70 flush floor duct
6		200x70 cable inlet and vertical duct from floor to horizontal wall duct
7		200x70 horizontal wall duct
8		Power Distribution Box (PDB)

Basic system		
	6	Electrical outlet 10/16A 230V + G
	2	RJ 45 network socket
	1	System remote control (Y), locked when power OFF "ON" and "OFF" impulse buttons with indicator lamps red=ON / green=OFF located at 1.50m above floor
	3	System emergency off (SEO), (recommended height 1.50m-1.85m above floor)
	2	System ON light (L) - 24V
	2	X-Ray ON lamp (L1) - 24V

	Flush floor duct
	Wall duct

ANCHORING/LOADING DISTRIBUTION TO THE FLOOR

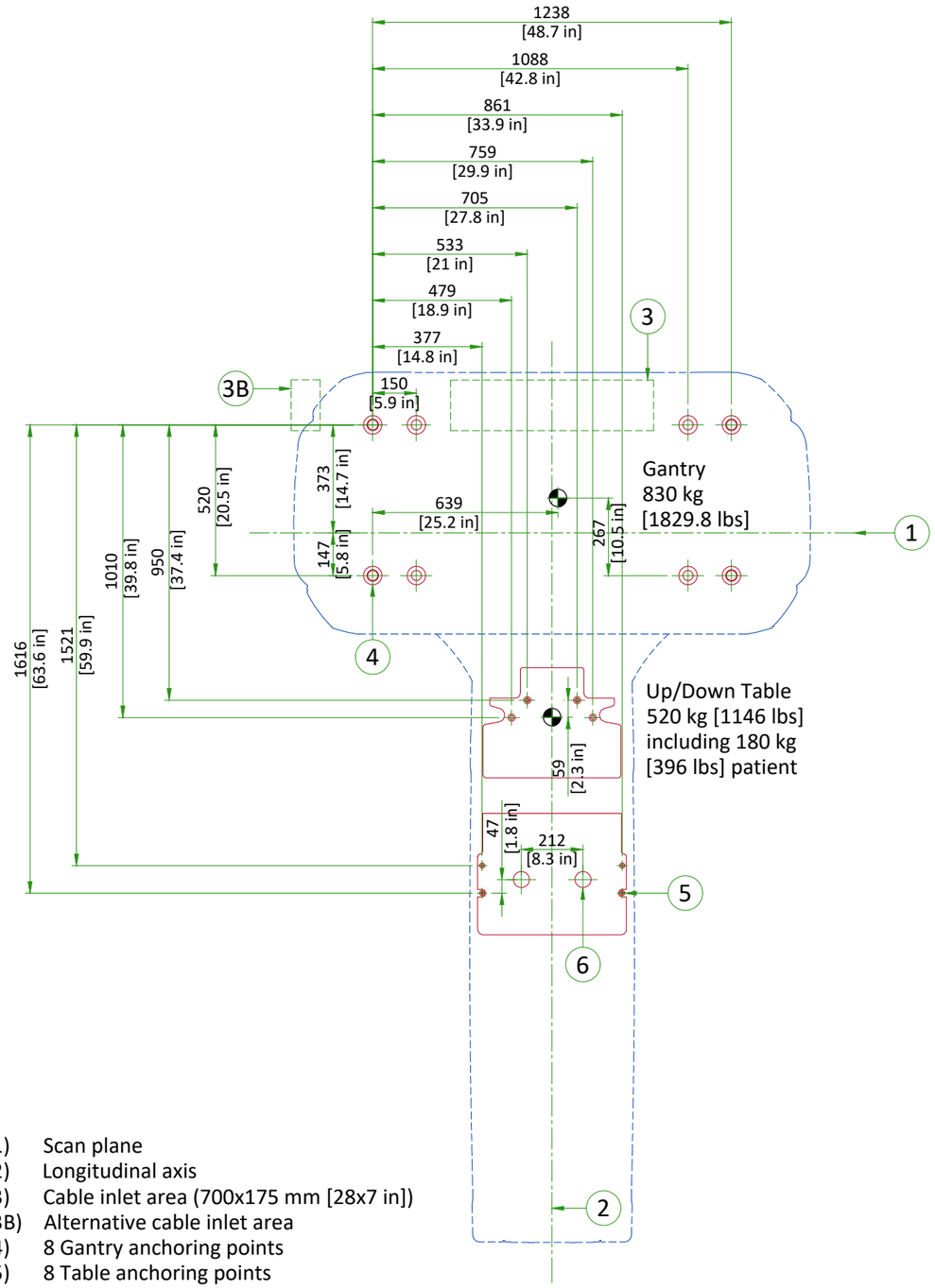

(1) Scan plane
(2) Longitudinal axis
(3) Cable inlet area (700x175 mm [28x7 in])
(3B) Alternative cable inlet area
(4) 8 Gantry anchoring points
(5) 8 Table anchoring points
(6) 2 level areas
Center of gravity
Main anchoring point
Backup anchoring point
Remove flooring

SCALE 1:20

FLOOR REQUIREMENTS

GE SUPPLIED GANTRY ANCHORS (5479997)

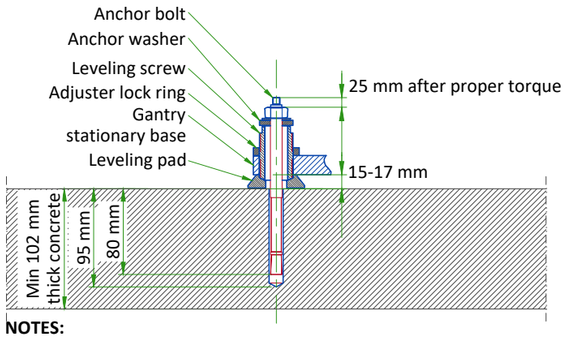

NOTES:
- Torque anchor to 50 Nm

GE SUPPLIED TABLE ANCHORS (5479996)

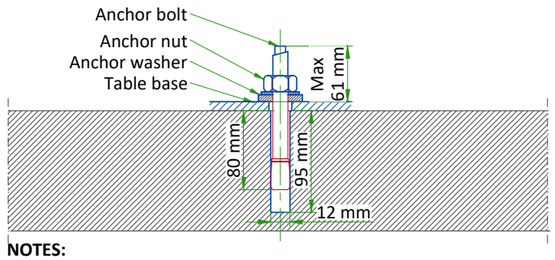

NOTES:
- Torque anchor to 50 Nm

FINISHED FLOOR REQUIREMENTS

- Installation requires a finish floor in the scan and control rooms
- The floor surface in the scan room directly under the gantry and table must be level.
- The floor levelness tolerance of the floor surface that the gantry and table will rest on is 6 mm over a 3000 mm distance.
- Shims should not be used to compensate for a floor that does not meet this requirement.
- Eight or more floor covering openings that are 102 mm in diameter are made to ensure the table and gantry rest on a solid surface. These floor penetrations can be sealed if required.
- The distance from central line of anchor to edge of concrete basement of Gantry/table should not be less than 155 mm.
- These requirements apply to all installation types.

NOT TO SCALE

TYPICAL CABLE MANAGEMENT

FLUSH FLOOR DUCT

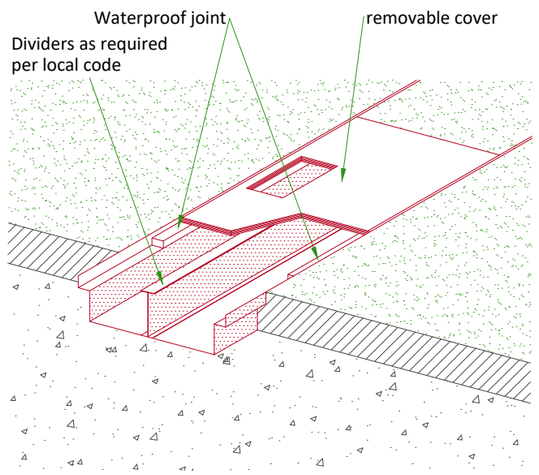

VERTICAL DUCT ON WALL

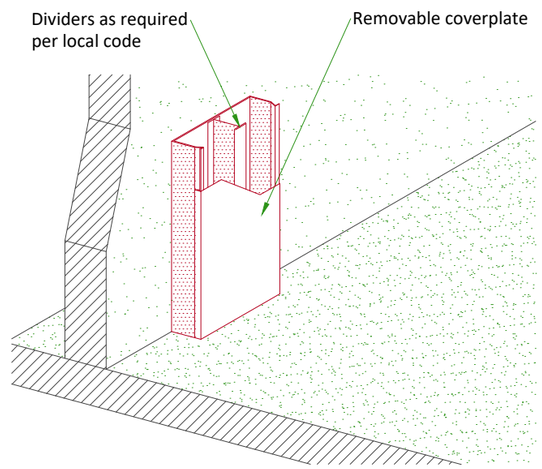

NOT TO SCALE

RADIATION PROTECTION LAYOUT

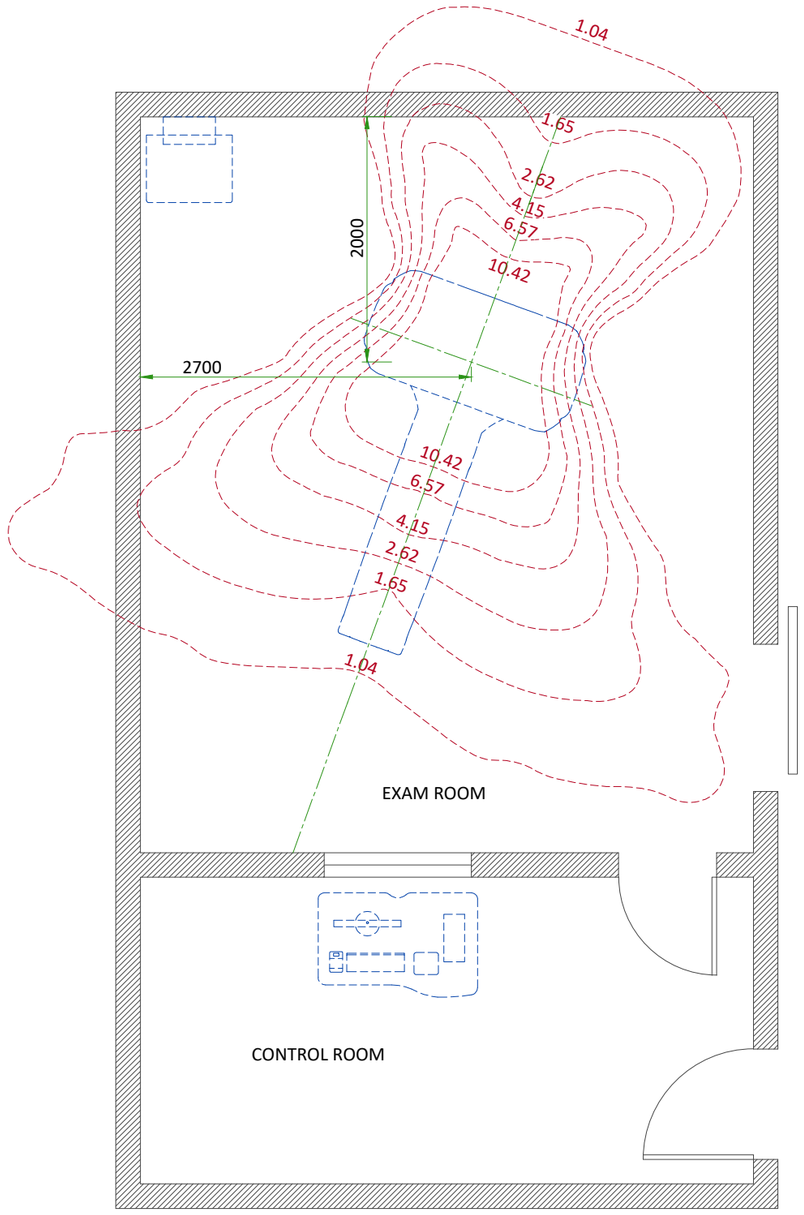

SHIELDING REQUIREMENTS SCALING	
CHANGED PARAMETER	**MULTIPLICATION FACTOR**
mAs	new mAs/100
80 kV	0.24
100 kV	0.45
120 kV	0.71
140 kV	1.00
1.25 mm aperture	0.09
5 mm aperture	0.34
10 mm aperture	0.56
15 mm aperture	0.81
20 mm aperture	1.00

SHIELDING REQUIREMENTS:

Engage a qualified radiological health physicist to review your scan room shielding requirements, taking into consideration:

- Scatter radiation levels within the scanning room
- Equipment placement.
- Weekly projected work-loads (number of patients/day technique (kvp*ma))
- Materials used for construction of walls, floors, ceiling, doors, and windows.
- Activities in surrounding scan room areas.
- Equipment in surrounding scan room areas (e.g., film developer, film storage)
- Room size and equipment placement within the room relative to room size.

The Illustrations on this page depict measured radiation levels within the scanning room, while scanning a 32 cm CTDI phantom and using a large filter, with the technique shown. Use the mAs, kV and aperture scaling factors in the table shown here to adjust exposure levels to the scan technique used at the site.

NOTE: Actual measurements can vary. Expected deviations equals ±15%, expect for the 5 mA and 1 mm techniques, where variations may be greater (up to a factor of 2), due to the inherent deviation in small values. The maximum deviation anticipated for tube output equals ±40%.

RADIATION SCATTER - HEAD PHANTOM

NOTE: 140 kV
100 mAs/scan
1 sec
16 x 1.25mm

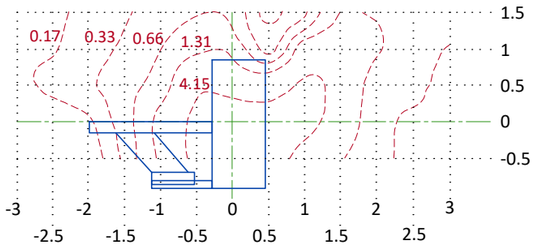

Elevation

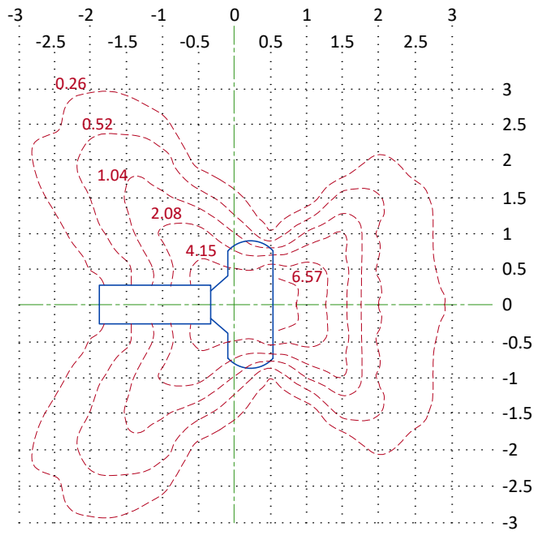

Plan View

DETAIL NOT TO SCALE

RADIATION SCATTER - BODY PHANTOM

NOTE: 140 kV
100 mAs/scan
1 sec
16 x 1.25mm

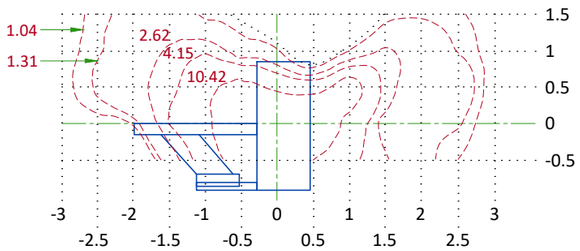

Elevation

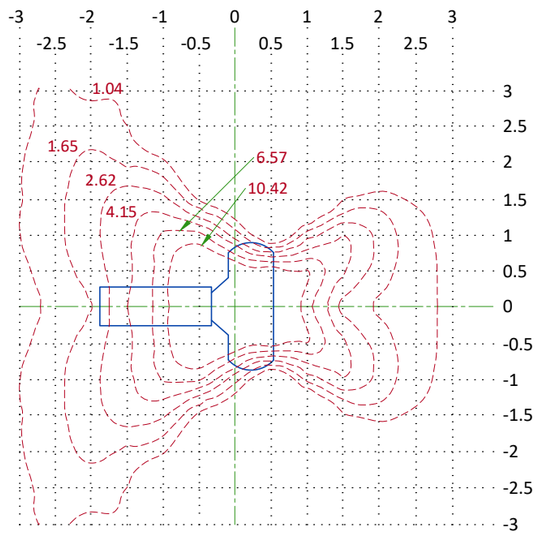

Plan View

DETAIL NOT TO SCALE

POWER REQUIREMENTS

POWER SUPPLY	**3 PHASES+G** **200/220/240/380/400/420/440/460/480 V ± 10%**
FREQUENCIES	**50/60Hz ± 1Hz**
MAXIMUM POWER DEMAND	**40 kVA**
AVERAGE (CONTINUOUS) POWER DEMAND	**6.3 kVA**
POWER FACTOR	**0.85**

- Power supply should come into a power distribution box (PDB) containing the protective units and controls.
- The section of the supply cable should be calculated in accordance with its length and the maximum permissible voltage drops.
- There must be discrimination between supply cable protective device at the beginning of the installation (main low-voltage transformer side) and the protective devices in the PDB.

SUPPLY CHARACTERISTICS

- Power input must be separate from any others which may generate transients (elevators, air conditioning, radiology rooms equipped with high speed film changers...).
- All equipment (lighting, power outlets, etc...) installed with GE system components must be powered separately.
- Phase imbalance 2% maximum.
- Transients must be less than 1500V peak. (on a 400V line)

GROUND SYSTEM

- System of equipotential grounding.
- Equipotential: The equipotential link will be by means of an equipotential bar. This equipotential bar should be connected to the protective earth conductors in the ducts of the non GE cableways and to additional equipotential connections linking up all the conducting units in the rooms where GE system units are located.

CABLES

- Power and cable installation must comply with the distribution diagram.
- All cables must be isolated and flexible, cable color codes must comply with standards for electrical installation.
- The cables from signaling and remote control (Y, SEO, L...) will go to PDB with a pigtail length of 1.5m, and will be connected during installation. Each conductor will be identified and isolated (screw connector).

CABLEWAYS

The general rules for laying cableways should meet the conditions laid down in current standards and regulations, with regard to:

- Protecting cables against water (cableways should be waterproof).
- Protecting cables against abnormal temperatures (proximity to heating pipes or ducts).
- Protecting cables against temperature shocks.
- Replacing cables (cableways should be large enough for cables to be replaced).
- Metal cableways should be grounded.

POWER DISTRIBUTION

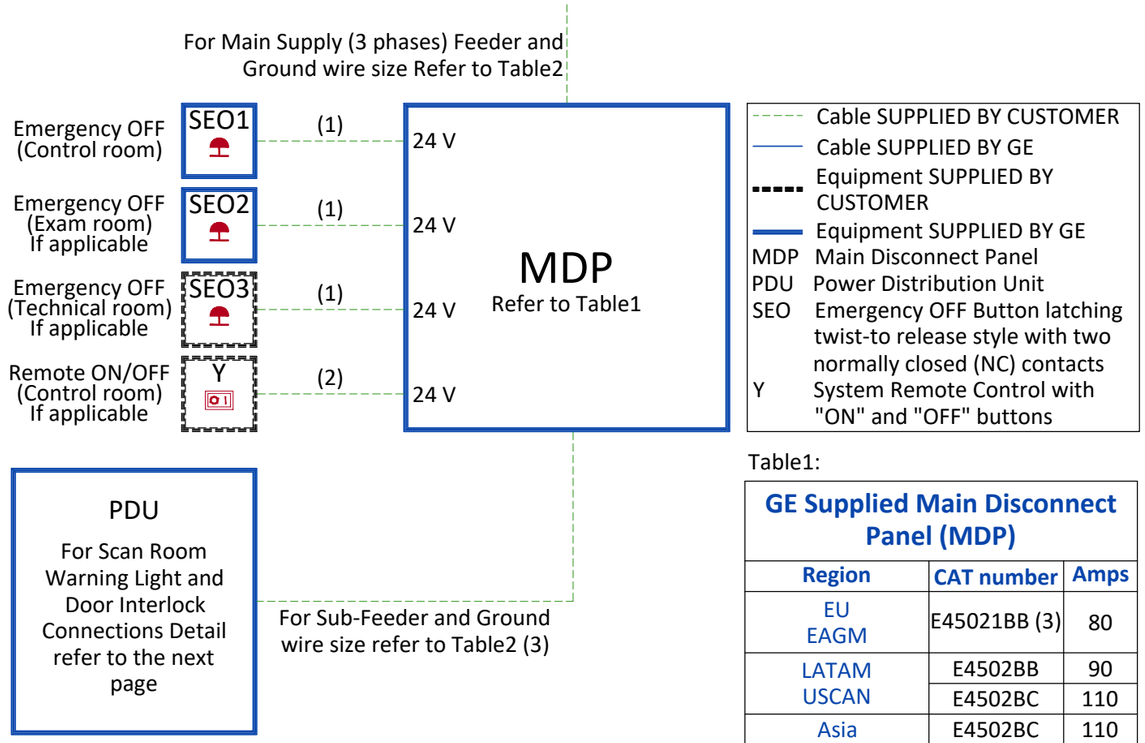

Table1:

GE Supplied Main Disconnect Panel (MDP)		
Region	**CAT number**	**Amps**
EU EAGM	E45021BB (3)	80
LATAM USCAN	E4502BB	90
	E4502BC	110
Asia	E4502BC	110
United Kingdom, Ireland	E46001TC-P D	80

Table2:

Feeder Table - 40 kVA

The information below assumes the use of copper wire, rated 75 C and run in steel conduit. All ampacity is determined in accordance with the National Electrical Code (NFPA 70), Table 310-16 (2002). The ampacity of the circuit protection device listed above determines the minimum feeder size, except where total source regulation limits require a larger size.

Feeder length from Power Substation to MDP - ft (m)	Minimum Wire Size, AWG or MCM (mm²)/VAC								
	200 VAC	220 VAC	240 VAC	380 VAC	400 VAC	420 VAC	440 VAC	460 VAC	480 VAC
50 (15)	2 (35)	3 (30)	3 (30)	4 (22)	4 (22)	4 (22)	4 (22)	4 (22)	4 (22)
100 (30)	2/0 (70)	1/0 (55)	1/0 (55)	4 (22)	4 (22)	4 (22)	4 (22)	4 (22)	4 (22)
150 (46)	5/0 (125)	3/0 (85)	3/0 (85)	3 (30)	4 (22)	4 (22)	4 (22)	4 (22)	4 (22)
200 (61)	6/0 (170)	5/0 (125)	4/0 (100)	3 (30)	3 (30)	3 (30)	3 (30)	4 (22)	4 (22)
250 (76)	6/0 (170)	6/0 (170)	5/0 (125)	1 (45)	2 (35)	2 (35)	3 (30)	3 (30)	3 (30)
300 (91)	7/0 (215)	6/0 (170)	6/0 (170)	1 (45)	1 (45)	1 (45)	2 (35)	2 (35)	3 (30)
350 (107)	8/0 (275)	7/0 (215)	6/0 (170)	1/0 (55)	1/0 (55)	1 (45)	1 (45)	1 (45)	2 (35)
400 (122)	8/0 (275)	8/0 (275)	8/0 (275)	2/0 (70)	1/0 (55)	1/0 (55)	1 (45)	1 (45)	1 (45)
Sub-Feeder length from MDP to PDU - ft (m)									
32 (9.7536)	2 (35)	3 (30)	3 (30)	4 (22)	4 (22)	4 (22)	4 (22)	4 (22)	4 (22)

Grounding

Run a dedicated 1/0 [55 mm²] or larger insulated copper ground wire from the power source to the MDP and from MDP to the PDU. Run the ground wire in the same raceway with the three-phase wires.

Notes :

(1) Wire size: 2x2mm² [14AWG] and 1x2mm² [14AWG] GND

(2) Wire size: 6x2mm² [14AWG] and 1x2mm² [14AWG] GND

(3) GE supplied MDP option E45021BB includes a 10 meter long power cable (H07RN-F) with wire size 4x50mm² and a 50 meter long control cable with wire size 2x1.5mm².

TEMPERATURE AND HUMIDITY SPECIFICATIONS

IN-USE CONDITIONS

	EXAM ROOM			CONTROL ROOM		
Temperature	Min	Recommended	Max	Min	Recommended	Max
	18°C	22°C	26°C	18°C	22°C	26°C
	64°F	72°F	79°F	64°F	72°F	79°F
Temperature gradient	**≤ 3°C/h**			**≤ 3°C/h**		
	≤ 5°F/h			**≤ 5°F/h**		
Relative humidity (1)	30% to 60%			30% to 60%		
Humidity gradient	**≤ 5%/h**			**≤ 5%/h**		

STORAGE CONDITIONS

Temperature	0°C to +30°C	32°F to 86°F
Temperature gradient	**≤ 3°C/h**	**≤ 5°F/h**
Relative humidity (1)	< 70%	< 70%
Humidity gradient	**≤ 5%/h**	**≤ 5%/h**

Storage longer than 6 months is not recommended.
(1) Non-condensing

AIR RENEWAL

According to local standards.

NOTE
In case of using air conditioning systems that have a risk of water leakage it is recommended not to install it above electric equipment or to take measures to protect the equipment from dropping water.

HEAT DISSIPATION

ROOM	DESCRIPTION	MAX HEAT DISSIPATION	
		kW	BTU
Exam Room	Gantry	3.5	11945
	Up/down Table	0.2	700
	TOTAL	3.7	12645
Exam/Technical Room*	Power Distribution Unit (PDU)	0.7	2389
	TOTAL	0.7	2389
Control Room	Operator Console (Z4G4)	0.81	2746
	LCD Monitor	0.03	102
	TOTAL	0.84	2848

*Technical Room is not mandatory, the placements of these elements are recommended in the Exam Room.

ENVIRONMENT

ALTITUDE

- The system shall meet all functional and performance specifications when placed in a room that is at an elevation of -150 m to 3000 m [-492 ft to 9,843 ft] above sea level.

MAGNETIC FIELD SPECIFICATIONS

- Limit the magnetic interference to guarantee specified imaging performance.

GANTRY:
- Ambient static magnetic fields less than 1 Gauss.
- Ambient AC magnetic fields less than 0.01 Gauss peak.

OPERATOR CONSOLE:
- Ambient static magnetic fields less than 10 Gauss.

MAXIMUM GANTRY AUDIBLE NOISE LEVEL

- The maximum ambient noise level is produced by the gantry during a CT scan acquisition. It is less than 70dBA when measured at a distance of one meter from the nearest gantry surface, in any direction.

MAXIMUM CONSOLE AUDIBLE NOISE LEVEL

- Maximum Console Audible Noise Level The maximum ambient noise levels is less than or equal to 56dBA when measured 1m up and 1m away from the console at an ambient temperature of 26°C.

INTERCONNECTIONS

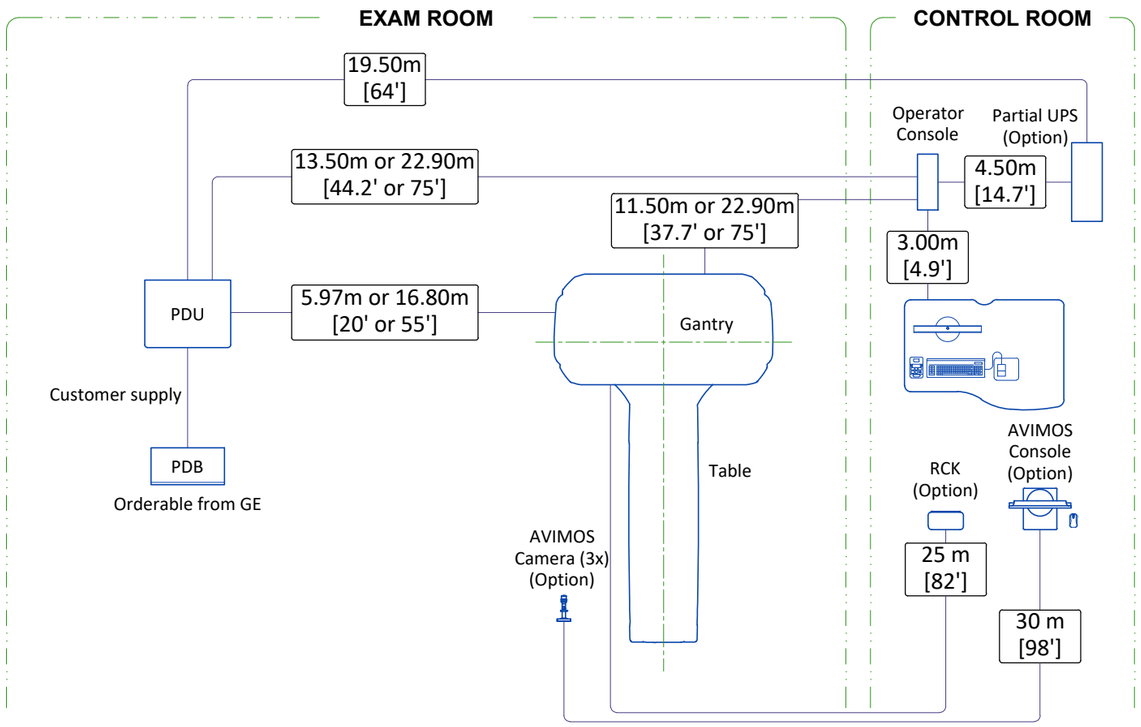

CONNECTIVITY REQUIREMENTS

Broadband Connections are necessary during the installation process and going forward to ensure full support from the Engineering Teams for the customers system. Maximum performance and availability for the customers system is maintained and closely monitored during the lifetime of the system.

Proactive and reactive maintenance is available utilizing the wide range of digital tools using the connectivity solutions listed below:

- Site-to-Site VPN/GE Solution
- Site-to-Site VPN/Customer Solution
- Connection through Dedicated Service Network
- Internet Access - connectivity for InSite 2.0

The requirements for these connectivity solutions are explained in the broadband solutions catalogue (separate document).

GANTRY WITH TABLE

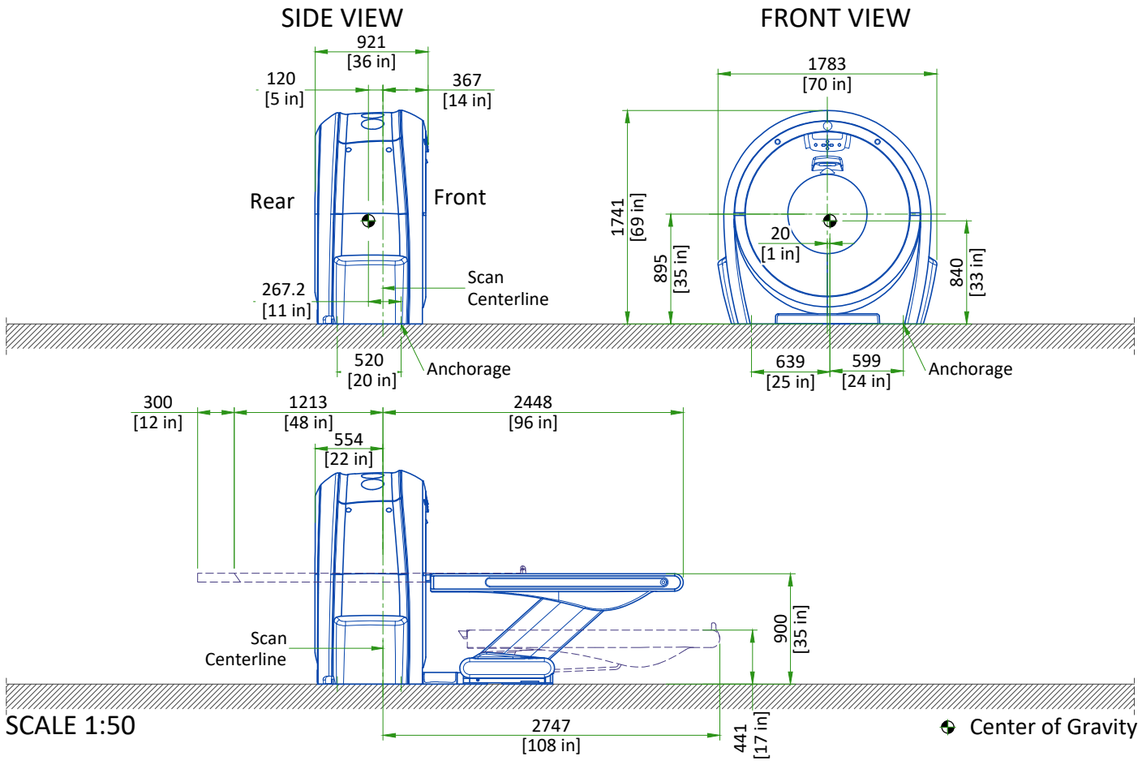

SCALE 1:50

POWER DISTRIBUTION UNIT (PDU)

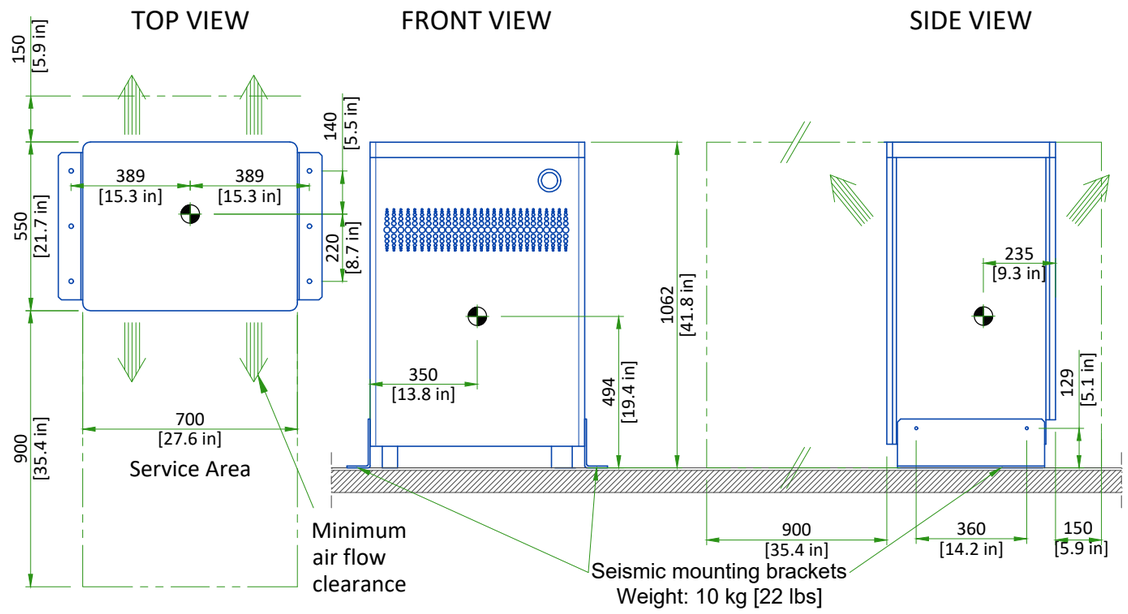

SCALE 1:20

AURORA SWS TABLE AND CONSOLE

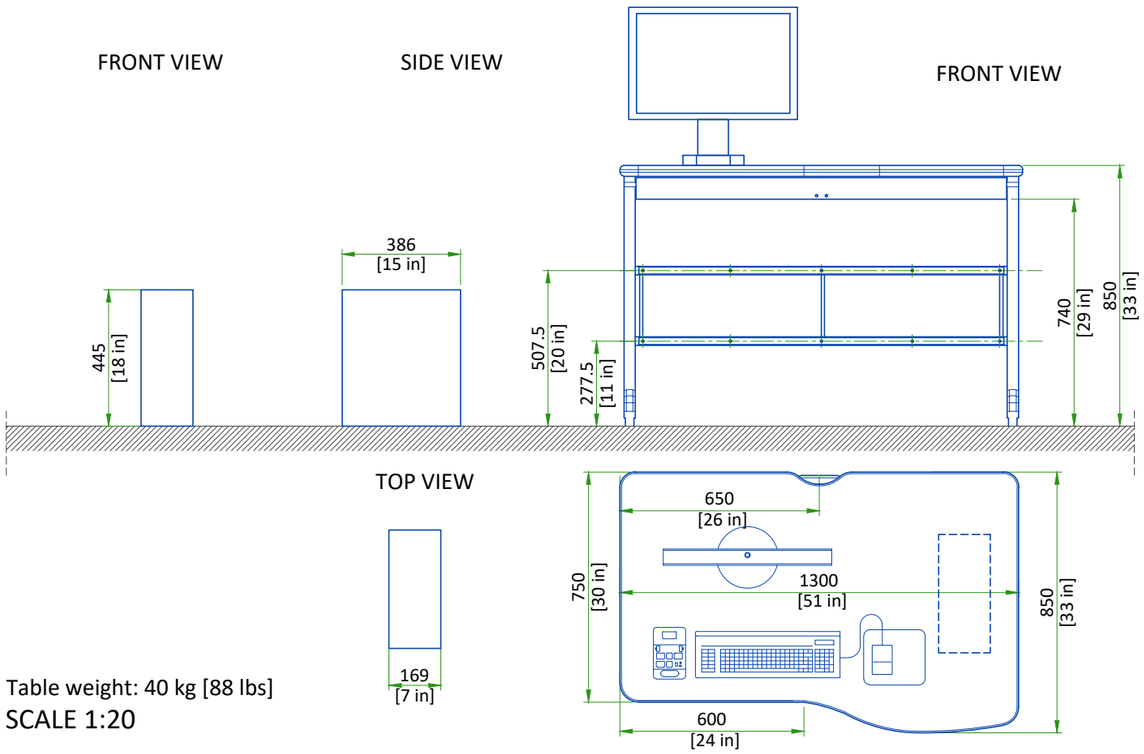

Table weight: 40 kg [88 lbs]

SCALE 1:20

MAIN DISCONNECT PANEL

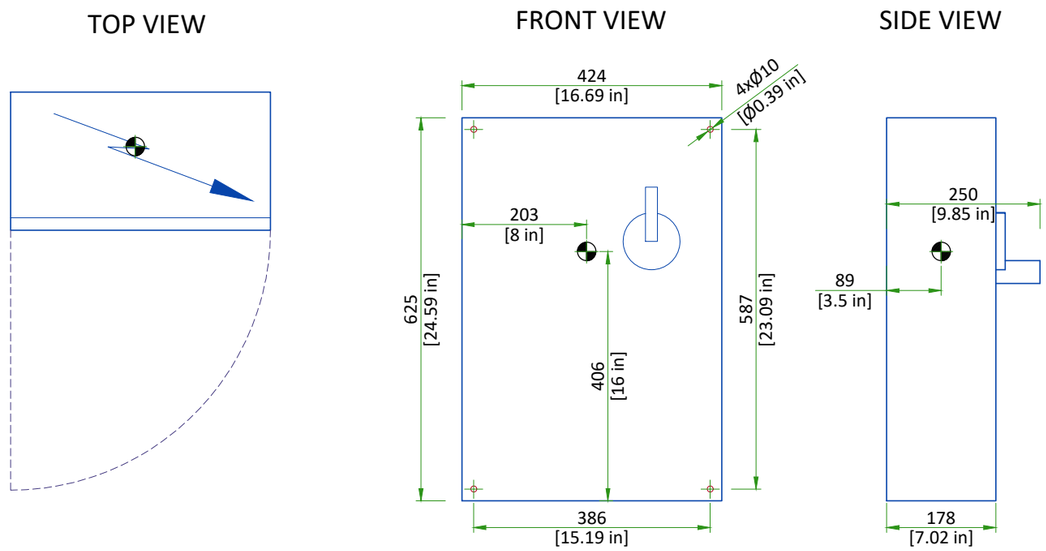

Center of gravity

SCALE 1:10

DELIVERY

THE CUSTOMER/CONTRACTOR SHOULD:

- Provide an area adjacent to the installation site for delivery and unloading of the GE equipment.
- Ensure that the dimensions of all doors, corridors, ceiling heights are sufficient to accommodate the movement of GE equipment from the delivery area into the definitive installation room.
- Ensure that access routes for equipment will accommodate the weights of the equipment and any transportation, lifting and rigging equipment.
- Ensure that all necessary arrangements for stopping and unloading on public or private property not belonging to the customer have been made.

DIMENSIONS OF DELIVERY WITH DOLLY TRANSPORT EQUIPMENT

EQUIPMENT	DIMENSIONS			WEIGHT	
GANTRY	LENGTH	2363 mm	93.1 in	1125 kg	2480 lbs
	WIDTH	921 mm	36.3 in		
	HEIGHT	1881 mm	74 in		
UP/DOWN TABLE	LENGTH	2137.5 mm	84.2 in	372 kg	821 lbs
	WIDTH	820 mm	32.3 in		
	HEIGHT	1038 mm	40.8 in		

GANTRY DELIVERY

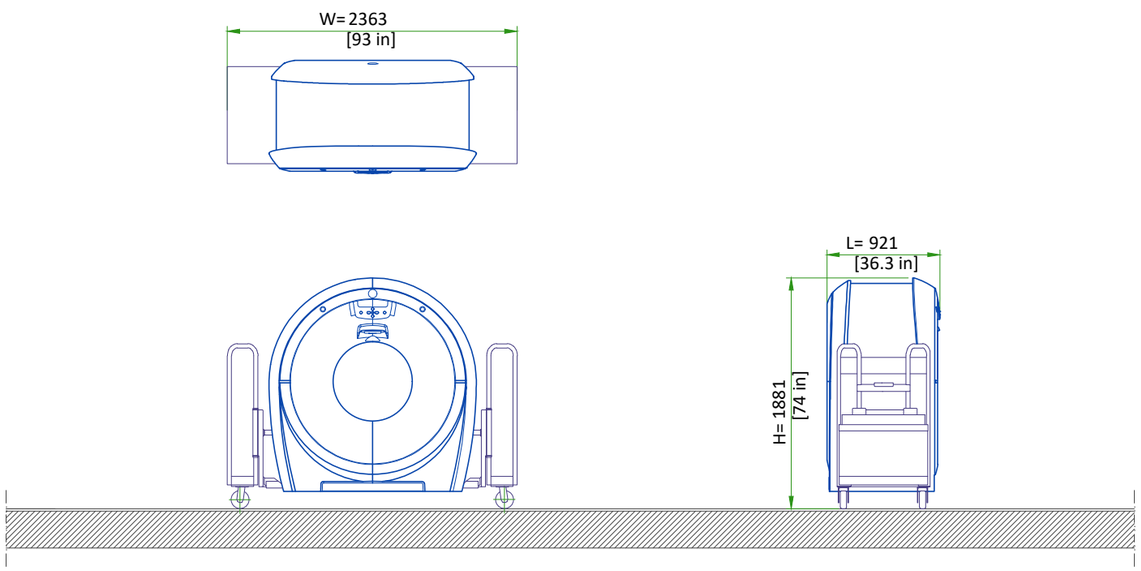

- The gantry is shipped on a dolly equipped with elevating casters (normal shipping configuration).

NOT TO SCALE

DISCLAIMER

GENERAL SPECIFICATIONS

- GE is not responsible for the installation of developers and associated equipment, lighting, cassette trays and protective screens or derivatives not mentioned in the order.
- The final study contains recommendations for the location of GE equipment and associated devices, electrical wiring and room arrangements. When preparing the study, every effort has been made to consider every aspect of the actual equipment expected to be installed.
- The layout of the equipment offered by GE, the dimensions given for the premises, the details provided for the pre-installation work and electrical power supply are given according to the information noted during on-site study and the wishes expressed by the customer.
- The room dimensions used to create the equipment layout may originate from a previous layout and may not be accurate as they may not have been verified on site. GE cannot take any responsibility for errors due to lack of information.
- Dimensions apply to finished surfaces of the room.
- Actual configuration may differ from options presented in some typical views or tables.
- If this set of final drawings has been approved by the customer, any subsequent modification of the site must be subject to further investigation by GE about the feasibility of installing the equipment. Any reservations must be noted.
- The equipment layout indicates the placement and interconnection of the indicated equipment components. There may be local requirements that could impact the placement of these components. It remains the customer's responsibility to ensure that the site and final equipment placement complies with all applicable local requirements.
- All work required to install GE equipment must be carried out in compliance with the building regulations and the safety standards of legal force in the country concerned.
- These drawings are not to be used for actual construction purposes. The company cannot take responsibility for any damage resulting therefrom.

CUSTOMER RESPONSIBILITIES

- It is the responsibility of the customer to prepare the site in accordance with the specifications stated in the final study. A detailed site readiness checklist is provided by GE. It is the responsibility of the customer to ensure all requirements are fulfilled and that the site conforms to all specifications defined in the checklist and final study. The GE Project Manager of Installation (PMI) will work in cooperation with the customer to follow up and ensure that actions in the checklist are complete, and if necessary, will aid in the rescheduling of the delivery and installation date.
- Prior to installation, a structrual engineer of record must ensure that the floor and ceiling is designed in such a way that the loads of the installed system can be securely borne and transferred. The layout of additional structural elements, dimensioning and the selection of appropriate installation methods are the sole responsibility of the structural engineer. Execution of load bearing structures supporting equipment on the ceiling, floor or walls are the customer's responsibility.

RADIO-PROTECTION

- Suitable radiological protection must be determined by a qualified radiological physicist in conformation with local regulations. GE does not take responsibility for the specification or provision of radio-protection.

THE UNDERSIGNED, HEREBY CERTIFIES THAT I HAVE READ AND APPROVED THE PLANS IN THIS DOCUMENT.		
DATE	NAME	SIGNATURE

GLOBAL SITE READINESS CHECKLIST (DI)

DOC1809666 Rev. 7

Site Ready Checks at Installation
EHS Site Requirements
Overall access route to the scan room free from obstruction / high hazards.
Enough space to store tools, equipment, parts, install waste and the general area free from obstruction and trip hazards.
Enough necessary facilities for the GE employees available.
No 3rd parties working in the area that may affect the safety of the installation activity.
Area free from any chemical, gas, dust, welding fume exposure and has painting been completed and dry.
All emergency routes identified, signed and clear from obstruction.
Accessible single source lockable panel that LOTO can be applied to for GE equipment installation (MDP and/or PDU).
There are no other conditions or hazards that you have observed or have been made aware of by the customer or contractors on site.
Required for Mechanical Install start
Room dimensions, including ceiling height, for all Exam, Equipment/Technical & Control rooms meets GE specifications.
Ceiling support structure, if indicated on the GE drawing, is in the correct location and at the correct height according to the Original Equipment Manufacturer specifications.
Levelness and spacing has been measured, and is ready for the installation of any GE supplied components.
Overhead support Structure (unistrut) has been confirmed with customer/contractor to meet required GE provided criteria.
Finished ceiling is installed. If applicable ceiling tiles installed per PMI discretion.
Floor levelness/flatness is measured and within tolerance, and there are no visible defects per GEHC specifications.
Entry door threshold meets PIM requirement.
Rooms that will contain equipment, including staging areas if applicable, are construction debris free. Precautions must be taken to prevent debris from entering rooms containing equipment.
Cable ways (floor/wall/ceiling/Access Flooring) are available for installation of GE cables are of correct length and diameter.
Cable ways routes per GE Final drawings and cable access openings areas installed at a time determined by GEHC PM. Surface floor duct can be installed at time of system installation.
Adequate room illumination installed and working.
Customer supplied countertops where GE equipment will be installed are in place.
Required for Calibration Start
HVAC systems Installed, and the site meets minimum environmental operational system requirements.
System power & grounding (PDB/MDP) is available as per GE specifications.
System power & grounding (PDB/MDP) is installed at point of final connection and ready to use. Lock Out Tag Out is available.
PMI to confirm all feeder wires and breaker are size appropriately. EPO installed if needed.
PMI to confirm with electrician all power and signal cables are well terminated ensuring there are no loose connections.
Network outlets installed.
Computer network available and working.
Lead doors and windows complete or scheduled to be installed. If applicable, radiation protection (shielding) finished & radioprotection regulatory approval for installation obtained.

Note: The details shown here are only an extract from DOC1809666. For the complete document please contact your PMI.