Drawing Index

These sheets are a document set and should not be separated.
Electrical information and references are contained on all sheets.

SITE READINESS C1

EQUIPMENT LAYOUT A1
(Equipment locations, heat loads, component weights, environmental specs)

STRUCTURAL LAYOUT S1
(Structural support/mounting locations for floor/wall/ceiling, wall support elevations)

STRUCTURAL DETAILS S2
(Floor and Ceiling loading information)

ELECTRICAL LAYOUT E1
(Contractor supplied wiring, interconnect methods, junction point locations and descriptions)

ELECTRICAL SPECIFICATIONS E2
(Maximum wiring run lengths, interconnect diagram, system power specifications)

ELECTRICAL DETAILS E3

EQUIPMENT DETAILS D1 THRU D2

These equipment IS drawings indicate the placement and interconnection of the listed equipment components. These drawings are not construction or site preparation drawings. Customer remains ultimately responsible for preparing the site to accommodate the IS and operation of such equipment in compliance with GE Healthcare's written specifications and all applicable federal, state, and/or local requirements.

* REQUIRED REFERENCE *

INJECTORS CT & PET

Pre Installation Manual

N/A

A mandatory component of this drawing set is the GE Healthcare Pre Installation manual. Failure to reference the preIS manual will result in incomplete documentation required for site design and preparation.

Pre Installation documents for GE Healthcare products can be accessed on the web at:

www.gehealthcare.com/siteplanning

GE Healthcare

CT Site Planning

imagination at work

Customer Site Readiness Requirements

- Any deviation from these drawings must be communicated in writing to and reviewed by your local GE Healthcare Installation Project Manager prior to making changes.
- Make arrangements for any rigging, special handling, or facility modifications that must be made to deliver the equipment to the installation site. If desired, your local GE Healthcare Installation Project Manager can supply a reference list of rigging contractors.
- New construction requires the following; 1. Secure area for equipment, 2. Power for drills and other test equipment, 3. Capability for image analysis, 4. Restrooms.
- Provide for refuse removal and disposal (e.g. crates, cartons, packing)
- Contact a radiation physicist or consultant to specify radiation containment requirements.

GE Equipment Delivery Requirements

The items on the GE Healthcare Site Readiness Checklist are REQUIRED to facilitate equipment delivery to the IS site. Equipment will not be delivered if these requirements are not satisfied.

GE Healthcare Site Readiness Checklist Rev 19

Before using this document ensure you have the latest Rev from MyWorkshop on DOC0422752

GEHC Global Order # : _____ Customer: _____

GEHC PMI : _____ FE / Installer: _____

The customer is responsible for proper site preparation regardless of any GEHC measurements/inspections/assessments.

Inspection Date:

	GEHC Minimum Requirements	Storage Is form ready?	PMI Is form ready?	FE Is form ready?	Comments If "N", enter comments or action plan
1	**MR Magnet Delivery Requirements:** Ensure cryogen venting system is available for magnet connection as defined by GEHC Pre-Installation Manual (PIM) requirements, exhaust fan system is installed and operational, 480V power, and chilled water supply is available 24x7 that meets system cooling requirements. External connectivity is available for magnet monitoring and phone service is available during delivery. Surface mount vibromat installed where required. Magnet room final flooring is in place.				
2	**MR RF Screen Room Requirements:** RF Screen Room is tested with copy of Test Report, emailed to IS/Admin:COEMB@ge.com, that it is compliant with GEHC specifications. Dock Bolt and magnet anchors (if applicable) installed using 2 part anchor. For HDx systems, blower box mount bolts installed by RF vendor using 2 part anchors				
3	**State Regulatory Requirements:** Facility registration number provided for states of Ill, KY, HI, RI, SC, TX. X-ray shielding plan and state acknowledgment letter provided to installer for AR, DC, NC, SC, CO, & WA. **Site Drawing Requirements:** Final version of equipment network and antenna, installation drawings (including red lined versions) verified to match actual room and has been provided to installer.				
4	**Surface Penetration Requirements:** Customer/Contractor scheduled to provide required drilling or cutting into floors, ceilings, and walls; OR surface penetration permit available and posted in the room when GEHC will perform the work.				
5	**Pre-Delivery Route Requirements:** The equipment delivery route from the truck to the final destination within the facility has been reviewed with all key stakeholders to safely meet the minimum requirements for equipment access, and all communications/notifications have occurred. Arrangements have been made for special handling (elevator, rigging, floor protection, fork lift, rollback truck, etc).				
6	**Finished Room Requirements:** Rooms that will contain equipment, including storage areas not in scan suite, are dust free. Provisions taken to maintain a dust free room. Precautions must be taken to prevent dust from entering rooms containing equipment when construction is incomplete in adjacent areas. All walls primed (final coat not needed on Day 1). Shielding, doors, and windows are to be installed. No contractor work being done during or after the installation that will cause dust in the installation areas or potential equipment damage. Room security to prevent unauthorized access and theft has been discussed with customer. The customer is aware of these security issues, implications and responsibility. For Storage: Room must meet PIM requirements for storage.				
7	**Electrical Requirements:** Lockable (LOTO) Main Disconnect Panel (MDP) is installed per GE guidelines and system power is available. Conduits, electrical cable ducting/dividers/cable trays, and access flooring is installed in proper location and height. Surface floor duct and load-side wires can be installed at time of system installation. Validate outlet location and requirements meet specifications for device/equipment.				
8	**HVAC Requirements:** The HVAC/Chilled Water systems designed to maintain the environment per spec/PIM is at running state and appears to provide the desired environmental conditions including location of vents, temperature and humidity for system operation.				
9	**Flooring Requirements:** Floor is clean and prepared for final floor covering. Floor levelness/flatness is measured and within tolerance, and there are no visible defects per GEHC specifications. Confirm customer anchoring plan aligns with designed floor thickness. Final flooring installed where required for network racks.				
10	**Ceiling Requirements:** Unistrut (or equivalent) location, leveliness and spacing is measured (or vendor confirmed) and consistent with the requirement of the installation drawings. Ensure unistrut and rails are not used as mounting surfaces. Ceiling grid is installed. Permanent lighting is installed and operational. HVAC diffusers are installed and connected to ductwork. Ceiling tiles installed per PMI discretion.				
11	**Staging Requirements:** Space has been identified to support the active installation process only. This area meets PIM/project book requirements. Storage space has been identified, if needed. This secured space would be used to store equipment indefinitely. If offsite, transportation plan has been developed at customer expense. This space must meet PIM requirements.				
12	**Network Connectivity:** Hardwire for network connectivity(network drop) is in place prior to delivery with specified network firewall configuration where required. Site Surveys for wireless mobile XR units have been completed.				
13	**Medical Gases Requirements:** Systems (hard piped or portable) in place to allow testing and calibration of equipment (anesthesia), including ventilation.				

GE Healthcare

IS Services Design Center
Milwaukee, Wisconsin

Copyright 2009 General Electric Company – Proprietary to GE

SHEET TITLE: SITE READINESS

MODALITY TYPE: INJECTORS CT & PET

THIS PLAN IS SUBMITTED TO SUGGEST LOCATION OF GE HEALTHCARE EQUIPMENT ASSOCIATED WITH THIS PROJECT. THIS PLAN WAS PREPARED BASED ON INFORMATION PROVIDED BY OTHERS. IN PREPARING THIS PLAN, EVERY EFFORT HAS BEEN MADE TO CONFORM DETAILS TO ACTUAL EQUIPMENT EXPECTED TO BE INSTALLED. IT IS NOT TO BE USED FOR ACTUAL CONSTRUCTION PURPOSES UNLESS OTHERWISE STATED. THE COMPANY CANNOT ACCEPT RESPONSIBILITY FOR ANY DAMAGES RESULTING THEREFROM.

PROJECT TITLE: INJECTOR TYPICAL FINAL CEILING & PEDESTAL MOUNT

PROJECT	REVISION
TYPINJ	03

DATE: 01.Jul.15
DRAWN BY: DJP
CHECKED BY: TMS

REVISION HISTORY:

SHEET C1

GE EQUIPMENT LISTING

EQUIPMENT ON ORDER FROM GE HEALTHCARE, INSTALLED BY GE HEALTHCARE, PER QUOTE CT & CT/PET DATED

NOTE: LOCAL CONDITIONS MAY DICTATE THAT ITEMS IDENTIFIED IN THIS CATEGORY BE INSTALLED BY OTHERS.

EQUIPMENT CROSS REFERENCE CHART

SEISMIC STATUS: P = PREAPPROVAL; C = CALCULATIONS/ PENDING APPROVAL; S = SPECIFICATIONS ONLY

QUANTITY ORDERED — REFER TO SHEET "D"

ITEM NO.	QUANTITY ORDERED	ITEM DESCRIPTION (* = EXISTING/REINSTALL)	WEIGHT	HEAT OUTPUT (PER HOUR)	DETAIL NO.	STRC PLAN	ELEC PLAN	SEISMIC STATUS
		NEMOTO						
1	1	MAIN UNIT	13 lbs		B8007C	-	IE	-
2	1	INJECTOR CONTROL CONSOLE	8 lbs		B8007C	-	ICC	S
3	1	INJECTOR HEAD ON PEDESTAL	26 lbs		B8007D	-	IH	-
4	1	INJECTOR HEAD ON OVERHEAD COUNTERPOISED SUSPENSION.	22 lbs		B5031N	B50 31B	IH	S
		MEDRAD STELLANT						
5	1	INJECTOR CONTROL AND ELECTRONICS	22 lbs	320 btu	E8007N	.	IE	S
6	1	INJECTOR HEAD ON PEDESTAL	44 lbs		B8007A	.	IH	-
7	1	INJECTOR HEAD ON OVERHEAD COUNTERPOISED SUSPENSION.	79 lbs		B5031	B50 31I	IH	S
		MEDRAD PROVIS						
8	1	REMOTE CONTROL FOR INJECTOR	4 lbs		B5028	.	IEC	S
9	1	INJECTOR ELECTRONICS	37 lbs	320 btu	B5028	.	IE	S
10	1	INJECTOR HEAD ON OVERHEAD COUNTERPOISED SUSPENSION.	92 lbs		B5031W B5031X	B50 31S	IH	S
		MEDRAD MARK IV/PLUS ECT						
11	1	REMOTE CONTROL FOR INJECTOR	4 lbs		B5028	.	IEC	S
12	1	INJECTOR ELECTRONICS	37 lbs	320 btu	B5028	.	IE	S
13	1	MEDRAD MARK V INJECTOR ON PEDESTAL	90 lbs	320 btu	B5030	.	IH	S
14	1	INJECTOR HEAD ON OVERHEAD COUNTERPOISED SUSPENSION.	79 lbs		B5031	B50 31S	IH	S
		MEDRAD ENVISION						
15	1	DISPLAY CONTROL UNIT	8 lbs		B8007	.	ICC	-
16	1	INJECTOR ELECTRONICS	13 lbs	320 btu	B8007	.	IE	S
17	1	INJECTOR HEAD ON PEDESTAL	44 lbs		B8007A	.	IH	-
18	1	INJECTOR HEAD ON OVERHEAD COUNTERPOISED SUSPENSION.	79 lbs		B5031	B50 31S	IH	S
		LF 9000						
19	1	REMOTE CONTROL FOR INJECTOR	6 lbs		---		IEC	S
20	1	INJECTOR ELECTRONICS	13 lbs	320 btu	B5029C	.	IE	S
21	1	INJECTOR HEAD ON REMOTE STAND	44 lbs		---		IH	S
22	1	INJECTOR HEAD ON OVERHEAD COUNTERPOISED SUSPENSION.	79 lbs		B5031	B50 31S	IH	S
		EZ-EM PERCUPUMP						
23	1	REMOTE CONTROL FOR INJECTOR	4 lbs			.	ICC	S
24	1	INJECTOR HEAD ON PEDESTAL	39 lbs			.	IH	S
25	1	INJECTOR HEAD ON OVERHEAD COUNTERPOISED SUSPENSION.	79 lbs		B5031U	B50 31S	IH	S
		EZ-EM EMPOWER						
26	1	EMPOWER INJECTOR POWER SUPPLY	6 lbs		B8009B	---		S
27	1	EMPOWER INJECTOR REMOTE CONTROL	15 lbs		B8009C	---	ICC	S
28	1	EMPOWER INJECTOR HEAD ON PEDESTAL	37 lbs		B8009A	---	IH	S
29	1	EMPOWER INJECTOR HEAD ON OVERHEAD COUNTERPOISED SUSPENSION.	74 lbs		B8009	---	IH	S

THE FOLLOWING ITEMS, WHICH HAVE BEEN ORDERED FROM GE HEALTHCARE, ARE TO BE INSTALLED BY THE CUSTOMER OR HIS CONTRACTOR.

EQUIPMENT LAYOUT

SCALE: 1/4" = 1'-0" — RECOMMENDED CEILING HEIGHT = 9'-0"

This equipment layout indicates the placement and interconnection of the indicated equipment components. There may be federal, state, and/or local requirements that could impact the placement of these components. It remains the Customer's responsibility for ensuring the site and final equipment placement complies with all applicable federal, state, and/or local requirements.

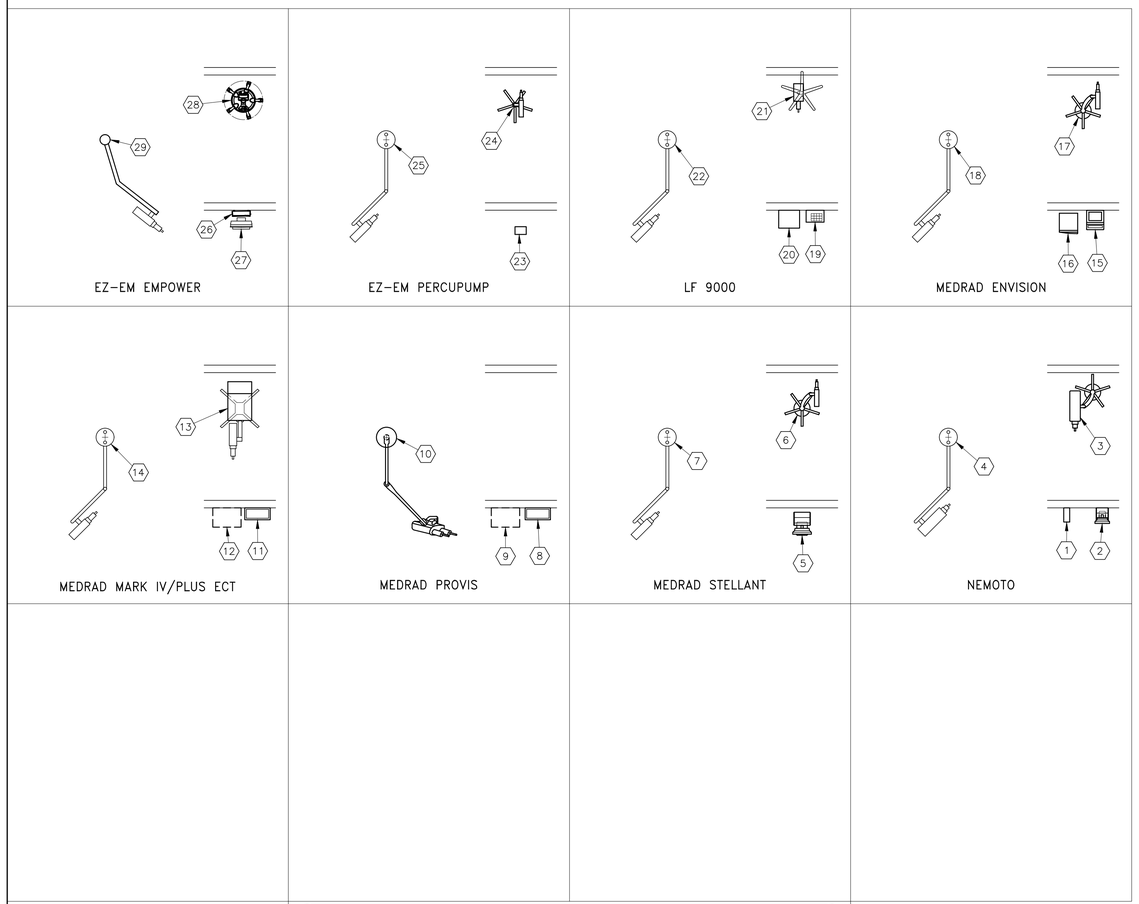

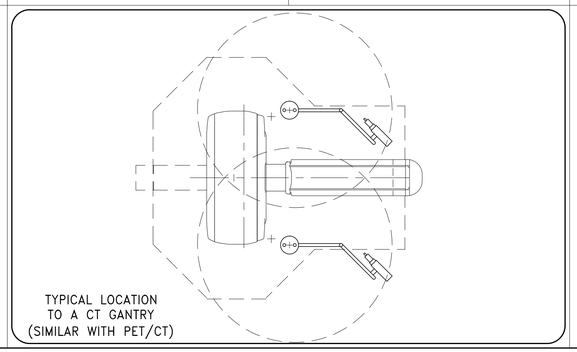

ANCILLARY ITEMS

CUSTOMER/CONTRACTOR SUPPLIED AND INSTALLED ITEMS

ITEM NO.	ITEM DESCRIPTION (* INDICATES EXISTING)

THE FOLLOWING ITEMS ARE AVAILABLE FROM GE HEALTHCARE TECHNOLOGIES. CONTACT YOUR LOCAL GE HEALTHCARE SERVICE REPRESENTATIVE FOR PRICING AND AVAILABILITY.

GENERAL SPECIFICATIONS

- THE REQUIRED CEILING HEIGHT INDICATED ON THESE PLANS IS TO ENSURE EQUIPMENT FUNCTION IS NOT INHIBITED. CONSULT WITH YOUR LOCAL GEHC IS SPECIALIST REGARDING ACCEPTABILITY OF OTHER CEILING HEIGHTS.
- CHECK ALL DOOR OPENINGS AND HALLWAYS FROM DELIVERY LOCATION TO WHERE EQUIPMENT IS TO BE INSTALLED TO ENSURE THE ROUTE PHYSICALLY AND STRUCTURALLY WILL ACCOMODATE THE EQUIPMENT AS SHIPPED.
- RADIATION PROTECTION REQUIREMENTS ARE NOT INDICATED ON THIS PLAN. WHERE NEEDED PER NATIONAL OR LOCAL CODE THEY SHALL BE SPECIFIED BY A QUALIFIED RADIOLOGICAL PHYSICIST.
- THE DEVELOPMENT OF THE EQUIPMENT LAYOUT, ROOM DIMENSIONS, MECHANICAL AND ELECTRICAL SUGGESTIONS IS PREDICATED UPON THE BEST INFORMATION OBTAINABLE FROM THE SITE, COUPLED WITH THE CUSTOMER'S KNOWN DESIRES. ARCHITECTURAL OR ELECTRICAL CHANGES INCLUDING RELOCATION OF EQUIPMENT ILLUSTRATED ON THIS DRAWING IS ALLOWED ONLY WITH NOTIFICATION, IN WRITING, AND REVIEW BY GEHC SERVICE DEPARTMENT. EQUIPMENT OPERATION, SERVICEABILITY, AND RESTRICTING CABLE LENGTHS, ETC., MAKE THIS ESSENTIAL FOR A PROPER IS. GEHC RESERVES THE RIGHT TO MAKE ON THE JOB CHANGES BECAUSE OF CUSTOMER REQUIREMENTS AND/OR OBSTACLES IN CONSTRUCTION, ETC..
- ALL WORK TO BE IN COMPLIANCE WITH NATIONAL AND LOCAL BUILDING SAFETY CODES.
- DIMENSIONS ARE TO FINISHED SURFACES OF ROOM

SITE ENVIRONMENT SPECIFICATIONS

MAGNETIC INTERFERENCE SPECIFICATIONS

THIS SHEET IS PART OF THE DOCUMENT SET LISTED ON SHEET C1 AND SHOULD NOT BE SEPARATED

GE Healthcare
IS Services Design Center
Milwaukee, Wisconsin

SHEET TITLE: EQUIPMENT LAYOUT
MODALITY TYPE: INJECTORS CT & PET

THIS PLAN IS SUBMITTED TO SUGGEST LOCATION OF GE HEALTHCARE EQUIPMENT ASSOCIATED WITH THIS PROJECT. ALL DIMENSIONS ARE FROM DRAWINGS PROVIDED. IN PREPARING THIS PLAN, EVERY EFFORT HAS BEEN MADE TO CONFORM DETAILS TO ACTUAL EQUIPMENT EXPECTED TO BE INSTALLED. IT IS NOT TO BE USED FOR ACTUAL CONSTRUCTION PURPOSES UNLESS APPROVED. THE COMPANY CANNOT ACCEPT RESPONSIBILITY FOR ANY DAMAGES RESULTING THEREFROM.

PROJECT TITLE: INJECTOR TYPICAL FINAL
CEILING & PEDESTAL MOUNT

PROJECT	REVISION
TYPINJ	03

DATE: 01.Jul.15
DRAWN BY: DJP
CHECKED BY: TMS

REVISION HISTORY:

SHEET A1

TYPICAL WALL SUPPORT ELEVATIONS

SCALE: 1/4" = 1'-0"

STRUCTURAL LAYOUT

RECOMMENDED CEILING HEIGHT = 9'-0"

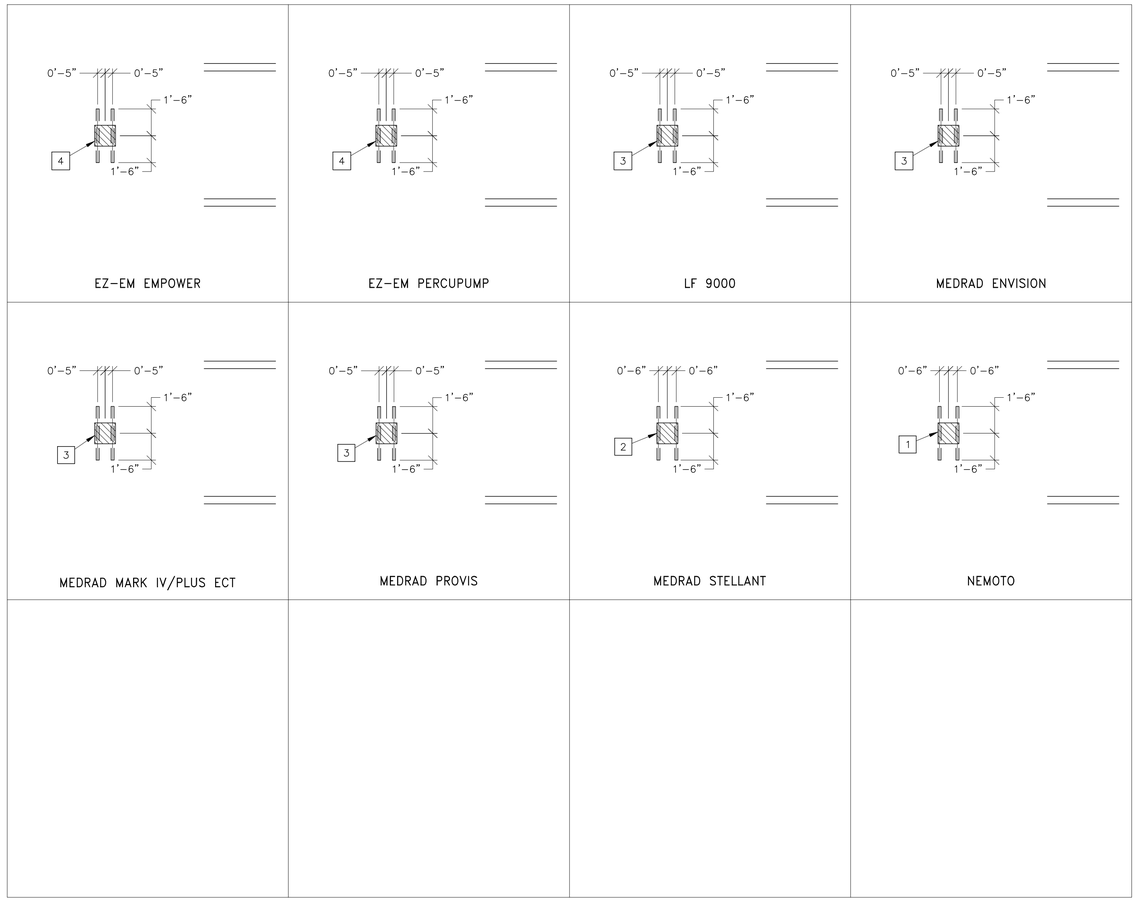

STRUCTURAL SUPPORT METHODS

CUSTOMER/CONTRACTOR SUPPLIED AND INSTALLED ITEMS

ITEM NO. ☐	ITEM DESCRIPTION (* INDICATES EXISTING)
1	THE PEDESTAL-CEILING MOUNT REQUIRES A FLUSH CEILING MOUNTING PLATE THAT IS STRUCTURALLY SUPPORTED TO HANDLE THE WEIGHT OF THE LOAD AS SHOWN IN DETAIL B50-31B A MAVIG DESIGNED CEILING PLATE IS AVAILABLE AND CAN BE ORDERED - E8007PJ. THIS 14" x 14" PLATE HAS PRE DRILLED 1/2" HOLES IN EACH OF THE 4 MOUNTING CORNERS. IF AN EQUIVALENT PLATE IS USED, THE SUPPLIED TEMPLATE SHOULD BE USED TO DRILL THE REQUIRED 4 - .39" HOLES IN A PATTERN AS SHOWN IN DETAIL B50-31B. AN ADDITIONAL .32" HOLE IS REQUIRED FOR THE PEDESTAL-CEILING MOUNT SAFETY CHAIN.
2	UNISTRUT OR EQUIVALENT SUPPORTS FOR FASTENING THE OVERHEAD COUNTERPOISED SUSPENSION. SUPPORT TO BE LOCATED AS SHOWN. SUPPORT SHOULD RUN CONTINUOUS WITH NO FITTINGS EXTENDING BELOW FACE OF UNISTRUT CHANNEL, BE PARALLEL, SQUARE, AND IN THE SAME HORIZONTAL PLANE, ABOVE FINISHED CEILING. ENSURE MOUNTING SURFACE IS INSTALLED LEVEL OR PLUMB WITHIN +/- 1 DEGREE, AND IS STRUCTURALLY SUFFICIENT TO MAINTAIN A LEVEL OR PLUMB CONDITION UNDER 110 LB (50KG) SYSTEM LOAD AND MAXIMUM SYSTEM MOMENT OF 4400 IN-LB (500N-M). METHODS OF SUPPORT THAT WILL PERMIT ATTACHMENT TO STRUCTURAL STEEL OR THROUGH BOLTS IN CONCRETE CONSTRUCTION SHOULD BE FAVORED. DO NOT USE SCREW ANCHORS IN DIRECT TENSION. 14" x 14" x 1/2" THICK STEEL PLATE PROVIDED BY MANUFACTURER. SEE DETAIL B5031I ON DETAIL SHEETS.
3	UNISTRUT OR EQUIVALENT SUPPORTS FOR FASTENING THE OVERHEAD COUNTERPOISED SUSPENSION. SUPPORT TO BE LOCATED AS SHOWN. SUPPORT SHOULD RUN CONTINUOUS WITH NO FITTINGS EXTENDING BELOW FACE OF UNISTRUT CHANNEL, BE PARALLEL, SQUARE, AND IN THE SAME HORIZONTAL PLANE, ABOVE FINISHED CEILING. BOOM REQUIRES 102 lbs/BOLT SUPPORT. METHODS OF SUPPORT THAT WILL PERMIT ATTACHMENT TO STRUCTURAL STEEL OR THROUGH BOLTS IN CONCRETE CONSTRUCTION SHOULD BE FAVORED. DO NOT USE SCREW ANCHORS IN DIRECT TENSION. 14" x 14" x 3/8" THICK STEEL PLATE PROVIDED BY THE CUSTOMER OR HIS CONTRACTOR. SEE DETAIL B5031S ON DETAIL SHEETS.
4	UNISTRUT OR EQUIVALENT SUPPORTS FOR FASTENING THE OVERHEAD COUNTERPOISED SUSPENSION. SUPPORT TO BE LOCATED AS SHOWN. SUPPORT SHOULD RUN CONTINUOUS WITH NO FITTINGS EXTENDING BELOW FACE OF UNISTRUT CHANNEL, BE PARALLEL, SQUARE, AND IN THE SAME HORIZONTAL PLANE, ABOVE FINISHED CEILING. BOOM REQUIRES 102 lbs/BOLT SUPPORT. METHODS OF SUPPORT THAT WILL PERMIT ATTACHMENT TO STRUCTURAL STEEL OR THROUGH BOLTS IN CONCRETE CONSTRUCTION SHOULD BE FAVORED. DO NOT USE SCREW ANCHORS IN DIRECT TENSION. 14" x 14" x 3/8" THICK STEEL PLATE PROVIDED BY THE CUSTOMER OR HIS CONTRACTOR. SEE DETAIL B5031T ON DETAIL SHEETS.

STRUCTURAL NOTES

- ALL STEEL WORK AND PARTS NECESSARY TO SUPPORT CEILING MOUNTED EQUIPMENT IS TO BE SUPPLIED BY THE CUSTOMER OR HIS CONTRACTORS.
- METHODS OF SUPPORT FOR THE STEELWORK THAT WILL PERMIT ATTACHMENT TO STRUCTURAL STEEL OR THROUGH BOLTS IN CONCRETE CONSTRUCTION SHOULD BE FAVORED. DO NOT USE CONCRETE OR MASONRY ANCHORS IN DIRECT TENSION.
- ALL UNITS THAT ARE WALL MOUNTED OR WALL SUPPORTED ARE TO BE PROVIDED WITH SUPPORTS WHERE NECESSARY. WALL SUPPORTS ARE TO BE SUPPLIED AND INSTALLED BY THE CUSTOMER OR HIS CONTRACTORS. SEE PLAN AND DETAIL SHEETS FOR SUGGESTED LOCATIONS AND MOUNTING HOLE LOCATIONS.
- ALL CEILING MOUNTED FIXTURES, AIR VENTS, SPRINKLERS, ETC. TO BE FLUSH MOUNTED, OR SHALL NOT EXTEND MORE THAN 1/4" BELOW THE FINISHED CEILING.
- FLOOR SLABS ON WHICH EQUIPMENT IS TO BE INSTALLED MUST BE LEVEL TO 1/4" in 10'-0"
- DIMENSIONS ARE TO FINISHED SURFACES OF ROOM.
- CUSTOMERS CONTRACTOR MUST PROVIDE ALL PENETRATIONS IN POST TENSION FLOORS.
- CUSTOMERS CONTRACTOR MUST PROVIDE AND INSTALL ANY NON-STANDARD ANCHORING. DOCUMENTS FOR STANDARD ANCHORING METHODS ARE INCLUDED WITH GE EQUIPMENT DRAWINGS FOR GEOGRAPHIC AREAS THAT REQUIRE SUCH DOCUMENTATION.
- CUSTOMERS CONTRACTOR MUST PROVIDE AND INSTALL HARDWARE FOR "THROUGH THE FLOOR" ANCHORING AND/OR ANY BRACING UNDER ACCESS FLOORS. THIS CONTRACTOR MUST ALSO PROVIDE FLOOR DRILLING THAT CANNOT BE COMPLETED BECAUSE OF AN OBSTRUCTION ENCOUNTERED WHILE DRILLING BY THE GE INSTALLER SUCH AS REBAR ETC.
- IT IS THE CUSTOMER'S RESPONSIBILITY TO PERFORM ANY FLOOR OR WALL PENETRATIONS THAT MAY BE REQUIRED. THE CUSTOMER IS ALSO RESPONSIBLE FOR ENSURING THAT NO SUBSURFACE UTILITIES (E.G., ELECTRICAL OR ANY OTHER FORM OF WIRING, CONDUITS, PIPING, DUCT WORK OR STRUCTURAL SUPPORTS (I.E. POST TENSION CABLES OR REBAR)) WILL INTERFERE OR COME IN CONTACT WITH SUBSURFACE PENETRATION OPERATIONS (E.G. DRILLING AND INSTALLATION OF ANCHORS/SCREWS) PERFORMED DURING THE INSTALLATION PROCESS. TO ENSURE WORKER SAFETY, GE INSTALLERS WILL PERFORM SURFACE PENETRATION OPERATIONS ONLY AFTER THE CUSTOMER'S VALIDATION AND COMPLETION OF THE "GE SURFACE PENETRATION PERMIT"

THIS SHEET IS PART OF THE DOCUMENT SET LISTED ON SHEET C1 AND SHOULD NOT BE SEPARATED

GE Healthcare
IS Services Design Center
Milwaukee, Wisconsin

SHEET TITLE: STRUCTURAL LAYOUT

MODALITY TYPE: INJECTORS CT & PET

THIS PLAN IS SUBMITTED TO SUGGEST LOCATION OF GE HEALTHCARE EQUIPMENT AND ASSOCIATED PARTS, TUBING, CABLES, ETC. AS PROVIDED BY GE HEALTHCARE SYS. IN PREPARING THIS PLAN, EVERY EFFORT HAS BEEN MADE TO CONFORM DETAILS TO ACTUAL EQUIPMENT EXPECTED TO BE INSTALLED. IT IS NOT TO BE USED FOR ACTUAL CONSTRUCTION PURPOSES UNTIL THE GE HEALTHCARE COMPANY CANNOT ACCEPT RESPONSIBILITY FOR ANY DAMAGES RESULTING THEREFROM.

PROJECT TITLE: INJECTOR TYPICAL FINAL CEILING & PEDESTAL MOUNT

PROJECT	REVISION
TYPINJ	03

DATE: 01.Jul.15
DRAWN BY: DJP
CHECKED BY: TMS

REVISION HISTORY:

SHEET S1

SUPPORT DETAIL
OVERHEAD COUNTERPOISED SUSPENSION

B50–31B
REV. DATE: 09.Jul.13

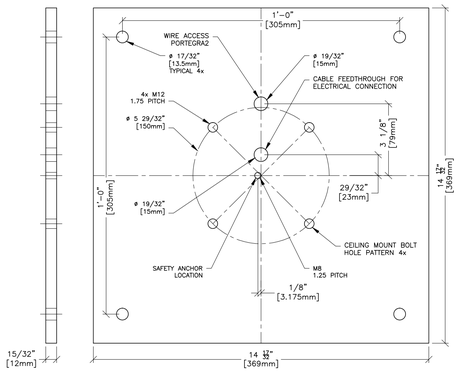

THE SUPPORT STRUCTURE FOR THIS CEILING MOUNTED OPTION AND A FLUSH MOUNTING PLATE MUST BE DESIGNED BY A STRUCTURAL ENGINEER AND INSTALLED BY A QUALIFIED CONTRACTOR PRIOR TO THE CT INSTALLATION

DRAWING NOT TO SCALE

SUPPORT DETAIL
OVERHEAD COUNTERPOISED SUSPENSION

B50–31I
REV. DATE: 01.Nov.12

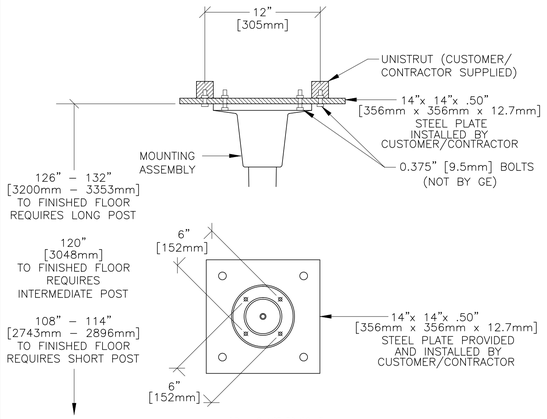

DRAWING NOT TO SCALE

SUPPORT DETAIL
INJECTOR & LEAD GLASS SHIELD
ON OVERHEAD COUNTERPOISED SUSPENSION

B50–31S
REV. DATE: 03/05/07

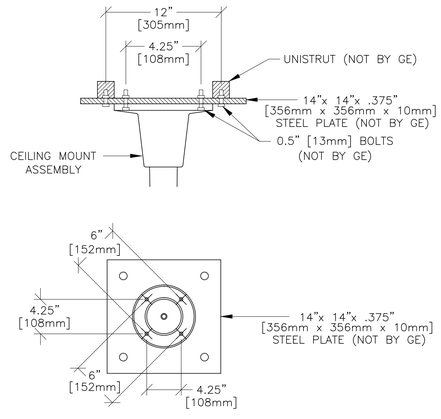

DRAWING NOT TO SCALE

SUPPORT DETAIL
OVERHEAD COUNTERPOISED SUSPENSION

B50–31T
REV. DATE: 03/05/07

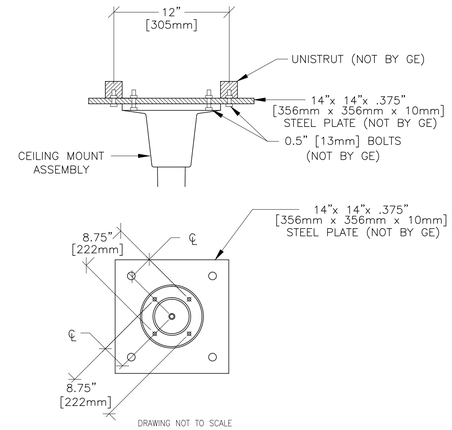

DRAWING NOT TO SCALE

THIS SHEET IS PART OF THE DOCUMENT SET LISTED ON SHEET C1 AND SHOULD NOT BE SEPARATED

GE Healthcare

IS Services Design Center
Milwaukee, Wisconsin

SHEET TITLE: STRUCTURAL DETAILS

MODALITY TYPE: INJECTORS CT & PET

THIS PLAN IS SUBMITTED TO SUGGEST LOCATION OF GE HEALTHCARE EQUIPMENT AND ASSOCIATED PARTS, FITTINGS AND WIRING. DETAILS MAY BE OMITTED FROM DRAWINGS. IN PREPARING THIS PLAN, EVERY EFFORT HAS BEEN MADE TO CONFORM DETAILS TO ACTUAL EQUIPMENT EXPECTED TO BE INSTALLED. IT IS NOT TO BE USED FOR ACTUAL CONSTRUCTION PURPOSES UNLESS VERIFIED. THE COMPANY CANNOT ACCEPT RESPONSIBILITY FOR ANY DAMAGES RESULTING THEREFROM.

PROJECT TITLE:
INJECTOR
TYPICAL FINAL
CEILING & PEDESTAL MOUNT

PROJECT	REVISION
TYPINJ	03

DATE: 01.Jul.15
DRAWN BY: DJP
CHECKED BY: TMS

REVISION HISTORY:

SHEET
S2

SCALE: 1/4" = 1'-0"

ELECTRICAL PLAN

RECOMMENDED CEILING HEIGHT = 9'-0"

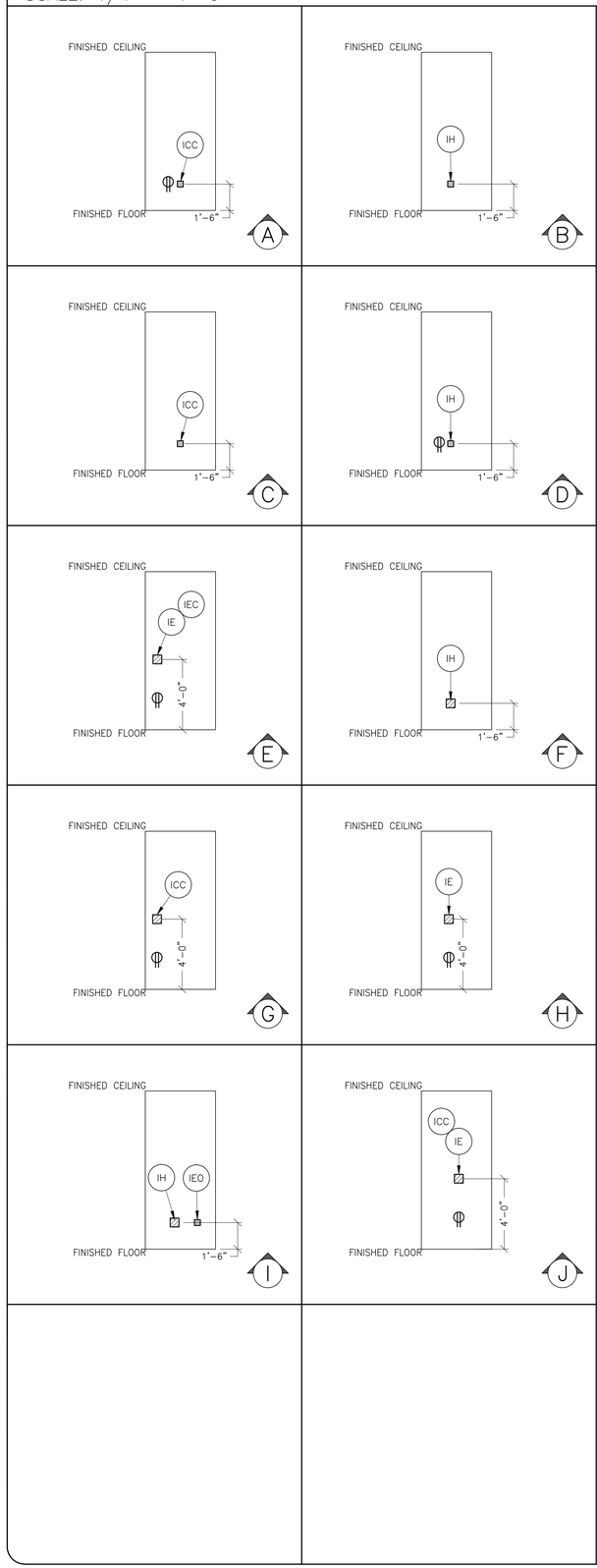

ELECTRICAL OUTLET LEGEND

CUSTOMER/CONTRACTOR SUPPLIED AND INSTALLED ITEMS. HEIGHT ABOVE FLOOR DETERMINED BY LOCAL CODES UNLESS OTHERWISE SPECIFIED.

- DUPLEX HOSPITAL GRADE, DEDICATED WALL OUTLET 120-V, SINGLE PHASE POWER
- DUPLEX HOSPITAL GRADE, DEDICATED CEILING OUTLET 120-V, SINGLE PHASE POWER

PLEASE SEE BELOW FOR ADDITIONAL REQUIRED CONDUIT RUNS AND SIZES.

JUNCTION POINT NOTES

- ALL JUNCTION BOXES, CONDUIT, DUCT, DUCT DIVIDERS, SWITCHES, CIRCUIT BREAKERS, ETC., ARE TO BE SUPPLIED AND INSTALLED BY CUSTOMERS ELECTRICAL CONTRACTOR.
- CONDUIT AND DUCT RUNS SHALL HAVE SWEEP RADIUS BENDS
- CONDUITS AND DUCT ABOVE CEILING OR BELOW FINISHED FLOOR MUST BE INSTALLED AS NEAR TO CEILING OR FLOOR AS POSSIBLE TO REDUCE RUN LENGTH.
- CEILING MOUNTED JUNCTION BOXES ILLUSTRATED ON THIS PLAN MUST BE INSTALLED FLUSH WITH FINISHED CEILING.
- ALL DUCTWORK MUST MEET THE FOLLOWING REQUIREMENTS:
  1. DUCTWORK SHALL BE METAL WITH DIVIDERS AND HAVE REMOVABLE, ACCESSIBLE COVERS.
  2. DUCTWORK SHALL BE CERTIFIED/RATED FOR ELECTRICAL POWER PURPOSES.
  3. DUCTWORK SHALL BE ELECTRICALLY AND MECHANICALLY BONDED TOGETHER IN AN APPROVED MANNER.
  4. PVC AS A SUBSTITUTE MUST BE USED IN ACCORDANCE WITH ALL LOCAL AND NATIONAL CODES.
- ALL OPENINGS IN ACCESS FLOORING ARE TO BE CUT OUT AND FINISHED OFF WITH GROMMET MATERIAL BY THE CUSTOMERS CONTRACTOR.
- GENERAL CONTRACTOR TO INSERT PULL CORDS FOR ALL CABLE RUN CONDUITS BETWEEN THE EQUIPMENT ROOM AND THE OPERATORS CONTROL ROOM.
- 10 FOOT PIGTAILS AT ALL JUNCTION POINTS.
- ALL WIRING MUST BE THHN OR TFFN STRANDED COPPER THERMOPLASTIC 600 VOLT OR EQUIVALENT INSULATION. **ALUMINUM OR SOLID WIRES ARE NOT ALLOWED.**
- GROUNDING IS CRITICAL TO EQUIPMENT FUNCTION AND PATIENT SAFETY. SITE MUST CONFORM TO WIRING SPECIFICATIONS SHOWN ON THIS PLAN.

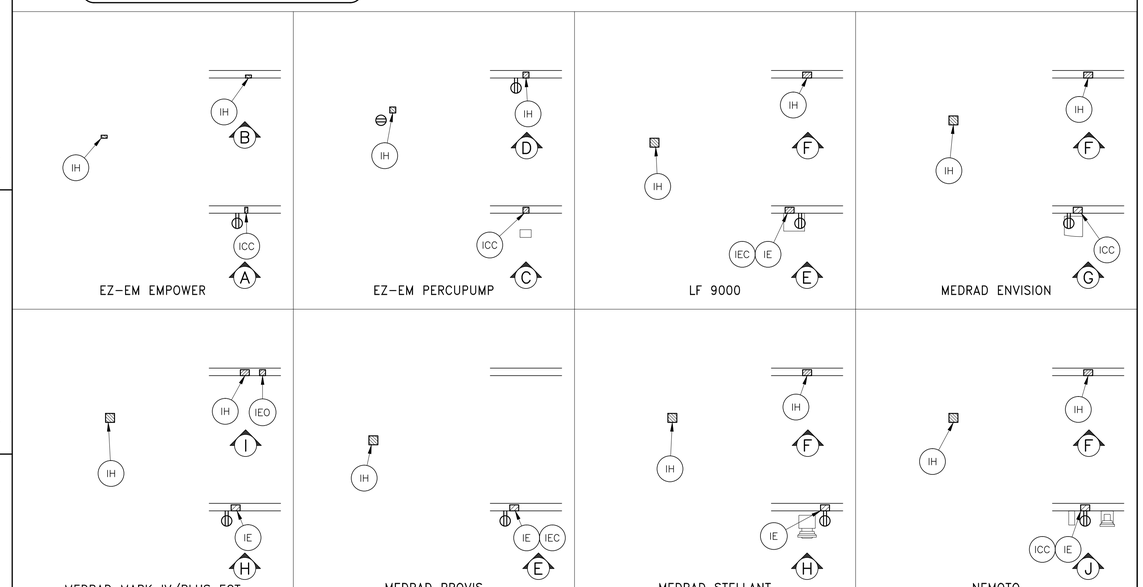

CONDUITS REQUIRED FOR INJECTOR: EZ-EM EMPOWER (CONDUITS ARE LOCATED ABOVE CEILING)

REV DATE: 08/06/09

ICC	TO	IH	ONE 1 1/2" CND.
RECOMMEND ONE 2 1/2" CND. FOR FUTURE UPGRADES			

CONDUITS REQUIRED FOR INJECTOR: EZ-EM PERCUPUMP (CONDUITS ARE LOCATED ABOVE CEILING)

REV DATE: 10/01/08

ICC	TO	IH	ONE 2 1/2" CND.

CONDUITS REQUIRED FOR INJECTORS: MEDRAD MARK IV/PLUS ECT & PROVIS, LF 9000 (CONDUITS ARE LOCATED ABOVE CEILING)

REV DATE: 10/01/08

IE	TO	IH	ONE 2 1/2" CND.

CONDUITS REQUIRED FOR INJECTORS: MEDRAD STELLANT & ENVISION (CONDUITS ARE LOCATED ABOVE CEILING)

REV DATE: 03/04/11

IE	TO	IH	ONE 2 1/2" CND.

CONDUITS REQUIRED FOR INJECTOR: NEMOTO (CONDUITS ARE LOCATED ABOVE CEILING)

REV DATE: 10/01/08

IE	TO	IH	ONE 2 1/2" CND.

JUNCTION POINT DESCRIPTIONS

THE FOLLOWING MATERIALS ARE TO BE SUPPLIED AND INSTALLED BY THE CUSTOMER'S ELECTRICAL CONTRACTOR

POINT	DESCRIPTION	QTY.	HARDWARE	DETAIL NO., SHT. E3
	EZ-EM EMPOWER			
ICC	REMOTE CONTROL	1 1 1	COVERPLATE SINGLE GANG BOX 1 1/2 IN. DIA. CHASE NIPPLE	ELEC-8
IH	INJECTOR HEAD	1 1 1	COVERPLATE SINGLE GANG BOX 1 1/2 IN. DIA. CHASE NIPPLE	ELEC-8
	EZ-EM PERCUPUMP			
ICC	INJECTOR CONTROL	1 1 1	4 X 4 X 4 IN. BOX COVERPLATE 2 1/2 IN. DIA. CHASE NIPPLE	ELEC-8
IH	INJECTOR HEAD	1 1 1	4 X 4 X 4 IN. BOX 2 1/2 IN. DIA. CHASE NIPPLE COVERPLATE	ELEC-8
	LF 9000			
IE	INJECTOR ELECTRONICS	1 1 1	2 1/2 IN. DIA. CHASE NIPPLE COVERPLATE 6 X 6 X 4 IN. BOX	ELEC-8
IEC	INJECTOR CONTROL	1	CONNECT EXTERNALLY	
IH	INJECTOR HEAD	1 1 1	6 X 6 X 4 IN. BOX 2 1/2 IN. DIA. CHASE NIPPLE COVERPLATE	ELEC-8
	MEDRAD ENVISION			
ICC	INJECTOR CONTROL CONSOLE	1	EXTERNALLY CONNECTED	
IE	INJECTOR ELECTRONICS	1 1 1	6 X 6 X 4 IN. BOX COVERPLATE 2 1/2 IN. DIA. CHASE NIPPLE	ELEC-8
IH	INJECTOR HEAD	1 1 1 1	2 1/2 IN. DIA. CHASE NIPPLE 6 X 6 X 4 IN. BOX COVERPLATE	ELEC-8
	MEDRAD MARK IV/PLUS ECT			
IE	INJECTOR ELECTRONICS	1 1 1	COVERPLATE 6 X 6 X 4 IN. BOX 2 1/2 IN. DIA. CHASE NIPPLE	ELEC-8
IEC	INJECTOR ELECTRONICS CONTROL	1	CONNECT EXTERNALLY	
IH	INJECTOR HEAD	1 1 1	COVERPLATE 2 1/2 IN. DIA. CHASE NIPPLE 6 X 6 X 4 IN. BOX	ELEC-8
IEO	INJECTOR OUTLET	1 1	SINGLE GANG BOX DUPLEX HOSPITAL GRADE RECEPTACLE AND COVERPLATE	
	MEDRAD PROVIS			
IE	INJECTOR ELECTRONICS	1 1 1	COVERPLATE 6 X 6 X 4 IN. BOX 1 1/2 IN. DIA. CHASE NIPPLE	ELEC-8
IEC	INJECTOR ELECTRONICS CONTROL	1	CONNECT EXTERNALLY	
IH	INJECTOR HEAD	1 1 1	6 X 6 X 4 IN. BOX COVERPLATE 1 1/2 IN. DIA. CHASE NIPPLE	ELEC-8
	MEDRAD STELLANT			
IE	INJECTOR ELECTRONICS	1 1 1	2 1/2 IN. DIA. CHASE NIPPLE 6 X 6 X 4 IN. BOX COVERPLATE	ELEC-8
IH	INJECTOR HEAD	1 1 1	COVERPLATE 2 1/2 IN. DIA. CHASE NIPPLE SINGLE GANG BOX	ELEC-8
IH	INJECTOR HEAD (PEDESTAL)	1 1 1	COVERPLATE 2 1/2 IN. DIA. CHASE NIPPLE 6 X 6 X 4 IN. BOX	ELEC-8
	NEMOTO			
ICC	INJECTOR CONTROL CONSOLE	1	EXTERNALLY CONNECTED	
IE	INJECTOR ELECTRONICS	1 1 1	6 X 6 X 4 IN. BOX COVERPLATE 2 1/2 IN. DIA. CHASE NIPPLE	ELEC-8
IH	INJECTOR HEAD	1 1 1	SINGLE GANG BOX COVERPLATE 2 1/2 IN. DIA. CHASE NIPPLE	ELEC-8
IH	INJECTOR HEAD (PEDESTAL)	1 1 1	2 1/2 IN. DIA. CHASE NIPPLE 6 X 6 X 4 IN. BOX COVERPLATE	ELEC-8

CONTRACTOR SUPPLIED AND INSTALLED WIRING

ELECTRICAL CONTRACTOR SHALL RING OUT AND TAG ALL WIRES AT BOTH ENDS.

WIRE RUN, FROM – TO	QUANTITY, WIRE SIZE/COLOR

THIS SHEET IS PART OF THE DOCUMENT SET LISTED ON SHEET C1 AND SHOULD NOT BE SEPARATED

GE Healthcare

IS Services Design Center

Milwaukee, Wisconsin

SHEET TITLE: ELECTRICAL LAYOUT

MODALITY TYPE: INJECTORS CT & PET

THIS PLAN IS SUBMITTED TO SUGGEST LOCATION OF GE HEALTHCARE EQUIPMENT ASSOCIATED WITH THE ELECTRICAL SYSTEM. ALTHOUGH REASONABLE EFFORTS WERE MADE IN PREPARING THIS PLAN, EVERY EFFORT HAS BEEN MADE TO CONFORM DETAILS TO ACTUAL EQUIPMENT EXPECTED TO BE INSTALLED. IT IS NOT TO BE USED FOR CONSTRUCTION PURPOSES UNLESS CONFIRMED BY THE COMPANY. THE COMPANY CANNOT ACCEPT RESPONSIBILITY FOR ANY DAMAGES RESULTING THEREFROM.

PROJECT TITLE: INJECTOR TYPICAL FINAL CEILING & PEDESTAL MOUNT

PROJECT	REVISION
TYPINJ	03

DATE: 01.Jul.15

DRAWN BY: DJP

CHECKED BY: TMS

REVISION HISTORY:

SHEET

E1

WCD-1202

INTERCONNECT DIAGRAM

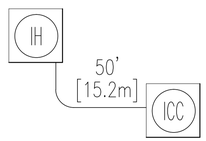

EZ-EM EMPOWER
EZ-EM PERCUPUMP

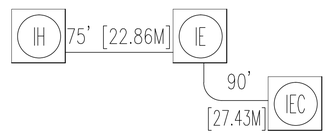

LF 9000
MEDRAD PROVIS

MEDRAD ENVISION

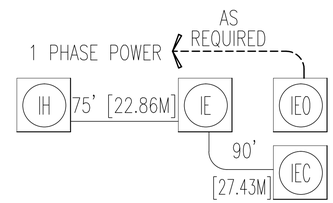

MEDRAD MARK IV/PLUS ECT

MEDRAD STELLANT

NEMOTO

POWER SPECIFICATIONS

ELECTRICAL NOTES

NOTE 1: ALL WIRES SPECIFIED SHALL BE COPPER STRANDED, FLEXIBLE, THERMO-PLASTIC, COLOR CODED, CUT 10 FOOT LONG AT OUTLET BOXES, DUCT TERMINATION POINTS OR STUBBED CONDUIT ENDS. ALL CONDUCTORS, POWER, SIGNAL AND GROUND, MUST BE RUN IN A CONDUIT OR DUCT SYSTEM. ELECTRICAL CONTRACTOR SHALL RING OUT AND TAG ALL WIRES AT BOTH ENDS. WIRE RUNS MUST BE CONTINUOUS COPPER STRANDED AND FREE FROM SPLICES. **ALUMINUM OR SOLID WIRES ARE NOT ALLOWED.**

NOTE 2: WIRE SIZES GIVEN ARE FOR USE OF EQUIPMENT. LARGER SIZES MAY BE REQUIRED BY LOCAL CODES.

NOTE 3: IT IS RECOMMENDED THAT ALL WIRES BE COLOR CODED, AS REQUIRED IN ACCORDANCE WITH NATIONAL AND LOCAL ELECTRICAL CODES.

NOTE 4: CONDUIT SIZES SHALL BE VERIFIED BY THE ARCHITECT, ELECTRICAL ENGINEER OR CONTRACTOR, IN ACCORDANCE WITH LOCAL OR NATIONAL CODES.

NOTE 5: CONVENIENCE OUTLETS ARE NOT ILLUSTRATED. THEIR NUMBER AND LOCATION ARE TO BE SPECIFIED BY OTHERS. LOCATE AT LEAST ONE CONVENIENCE OUTLET CLOSE TO THE SYSTEM CONTROL, THE POWER DISTRITBUTION UNIT AND ONE ON EACH WALL OF THE PROCEDURE ROOM. USE HOSPITAL APPROVED OUTLET OR EQUIVALENT.

NOTE 6: GENERAL ROOM ILLUMINATION IS NOT ILLUSTRATED. CAUTION SHOULD BE TAKEN TO AVOID EXCESSIVE HEAT FROM OVERHEAD SPOTLIGHTS. DAMAGE CAN OCCUR TO CEILING MOUNTING COMPONENTS AND WIRING IF HIGH WATTAGE BULBS ARE USED. RECOMMEND LOW WATTAGE BULBS NO HIGHER THAN 75 WATTS AND USE DIMMER CONTROLS (EXCEPT MR). DO NOT MOUNT LIGHTS DIRECTLY ABOVE AREAS WHERE CEILING MOUNTED ACCESSORIES WILL BE PARKED.

NOTE 7: ROUTING OF CABLE DUCTWORK, CONDUITS, ETC., MUST RUN DIRECT AS POSSIBLE OTHERWISE MAY RESULT IN THE NEED FOR GREATER THAN STANDARD CABLE LENGTHS (REFER TO THE INTERCONNECTION DIAGRAM FOR MAXIMUM USABLE LENGTHS POINT TO POINT).

NOTE 8: CONDUIT TURNS TO HAVE LARGE, SWEEPING BENDS WITH MINIMUM RADIUS IN ACCORDANCE WITH NATIONAL AND LOCAL ELECTRICAL CODES.

NOTE 9: A SPECIAL GROUNDING SYSTEM IS REQUIRED IN ALL PROCEDURE ROOMS BY SOME NATIONAL AND LOCAL CODES. IT IS RECOMMENDED IN AREAS WHERE PATIENTS MIGHT BE EXAMINED OR TREATED UNDER PRESENT, FUTURE, OR EMERGENCY CONDITIONS. CONSULT THE GOVERNING ELECTRICAL CODE AND CONFER WITH APPROPRIATE CUSTOMER ADMINISTRATIVE PERSONNEL TO DETERMINE THE AREAS REQUIRING THIS TYPE OF GROUNDING SYSTEM.

NOTE 10: THE MAXIMUM POINT TO POINT DISTANCES ILLUSTRATED ON THIS DRAWING MUST NOT BE EXCEEDED.

NOTE 11: PHYSICAL CONNECTION OF PRIMARY POWER TO GE EQUIPMENT IS TO BE MADE BY CUSTOMERS ELECTRICAL CONTRACTOR WITH THE SUPERVISION OF A GE REPRESENTATIVE. THE GE REPRESENTATIVE WOULD BE REQUIRED TO IDENTIFY THE PHYSICAL CONNECTION LOCATION, AND INSURE PROPER HANDLING OF GE EQUIPMENT.

DIAGRAM KEY

- - - - CUSTOMER/CONTRACTOR SUPPLIED WIRING. ROUTE IN ADEQUATE CONDUIT OR RACEWAY.

——— GE FURNISHED CABLE RUNS. ROUTE IN EMPTY CONDUIT OR RACEWAY.

59' [18M] MAXIMUM RUN LENGTH BETWEEN JUNCTION POINTS. Feet [Meters]

THIS SHEET IS PART OF THE DOCUMENT SET LISTED ON SHEET C1 AND SHOULD NOT BE SEPARATED

GE Healthcare
IS Services Design Center
Milwaukee, Wisconsin

SHEET TITLE: ELECTRICAL SPECIFICATIONS
MODALITY TYPE: INJECTORS CT & PET

THIS PLAN IS SUBMITTED TO SUGGEST LOCATION OF GE HEALTHCARE EQUIPMENT AND ASSOCIATED PARTS. ELECTRICAL WIRING, DUCTWORK, PLUMBING, AND OTHER SYSTEMS. IN PREPARING THIS PLAN, EVERY EFFORT HAS BEEN MADE TO CONFORM DETAILS TO ACTUAL EQUIPMENT EXPECTED TO BE INSTALLED. IT IS NOT TO BE USED FOR ACTUAL CONSTRUCTION, PURCHASE OR FABRICATION. THE COMPANY CANNOT ACCEPT RESPONSIBILITY FOR ANY DAMAGES RESULTING THEREFROM.

PROJECT TITLE:
INJECTOR
TYPICAL FINAL
CEILING & PEDESTAL MOUNT

PROJECT	REVISION
TYPINJ	03

DATE: 01.Jul.15
DRAWN BY: DJP
CHECKED BY: TMS

REVISION HISTORY:

SHEET
E2

ELECTRICAL DETAIL
BOX WITH COVERPLATE (TYPICAL)

ELEC-8
REV. DATE: 09/30/94

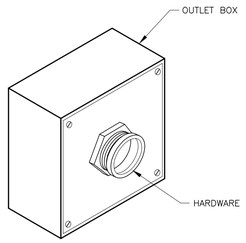

DETAIL NOT TO SCALE

THIS SHEET IS PART OF THE DOCUMENT SET LISTED ON SHEET C1 AND SHOULD NOT BE SEPARATED

GE Healthcare
IS Services Design Center
Milwaukee, Wisconsin

SHEET TITLE: ELECTRICAL DETAILS
MODALITY TYPE: INJECTORS CT & PET

THIS PLAN IS SUBMITTED TO SUGGEST LOCATION OF GE HEALTHCARE EQUIPMENT AND ASSOCIATED PANELS, FUTURE WIRE, DUCT, PIPE AND MISCELLANEOUS DRAWINGS. IN PREPARING THIS PLAN, EVERY EFFORT HAS BEEN MADE TO CONFORM DETAILS TO ACTUAL EQUIPMENT EXPECTED TO BE INSTALLED. IT IS NOT TO BE USED FOR ACTUAL CONSTRUCTION PURPOSES UNTIL THE COMPANY CANNOT ACCEPT RESPONSIBILITY FOR ANY DAMAGES RESULTING THEREFROM.

PROJECT TITLE:
INJECTOR
TYPICAL FINAL
CEILING & PEDESTAL MOUNT

PROJECT	REVISION
TYPINJ	03

DATE: 01.Jul.15
DRAWN BY: DJP
CHECKED BY: TMS

REVISION HISTORY:

SHEET
E3

EQUIPMENT DETAIL
NEMOTO INJECTOR ELECTRONICS
B8007C
REV. 00: 7/9/08

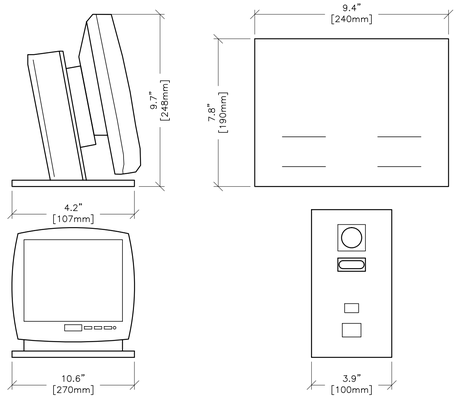

DRAWING NOT TO SCALE

EQUIPMENT DETAIL
NEMOTO INJECTOR ON PEDESTAL
B80–07D
REV. 00: 7/10/08

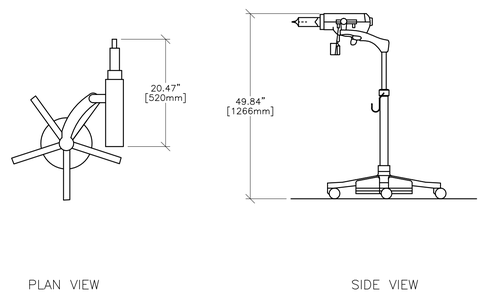

DRAWING NOT TO SCALE

EQUIPMENT DETAIL
NEMOTO INJECTOR ON OVERHEAD COUNTERPOISED SUSPENSION
B50–31N
REV. DATE: 06/23/09

VERIFY MOUNTING ASSEMBLY DIMENSIONS WITH INJECTOR MANUFACTURER.

POST	LENGTHS	GE ECAT #
SHORT	22.8" / 580mm	E8004NA
INTERMEDIATE	33.5" / 850mm	E8004NJ
LONG	N/A	N/A

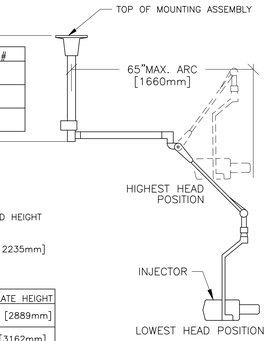

POST	MIN. PLATE HEIGHT	MAX. PLATE HEIGHT
SHORT	107.75" [2737mm]	113.75" [2889mm]
INTERMEDIATE	118.5" [3010mm]	124.5" [3162mm]
LONG	–	–

DRAWING NOT TO SCALE

EQUIPMENT DETAIL
STELLANT INJECTOR ELECTRONICS
E80–07N
REV. DATE: 19.SEP.13

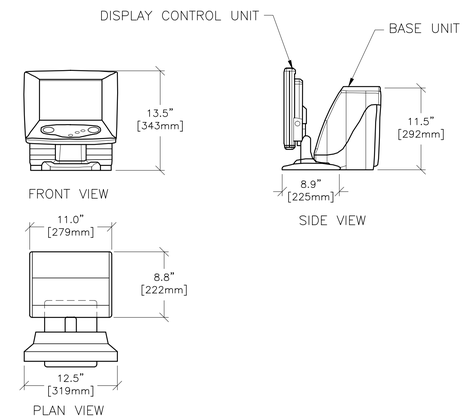

DRAWING NOT TO SCALE

EQUIPMENT DETAIL
ENVISION INJECTOR ON PEDESTAL
B80–07A
REV. 01: 7/10/08

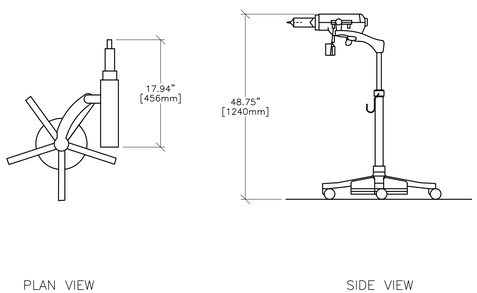

DRAWING NOT TO SCALE

EQUIPMENT DETAIL
MEDRAD INJECTOR ON OVERHEAD COUNTERPOISED SUSPENSION
B50–31
REV. DATE: 01.Nov.12

VERIFY MOUNTING ASSEMBLY DIMENSIONS WITH INJECTOR MANUFACTURER.

POST	LENGTHS	GE ECAT #
SHORT	22.8" / 580mm	E8007NB, ND, NG, NY, PB & PE
INTERMEDIATE	33.5" / 850mm	E8007PP, PN, PK, PR & PY
LONG	39.4" / 1000mm	E8007NE, NF, NJ, NN, PD & E8018AA

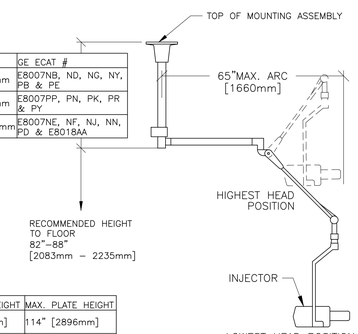

POST	MIN. PLATE HEIGHT	MAX. PLATE HEIGHT
SHORT	108" [2743mm]	114" [2896mm]
INTERMEDIATE	120" [3048mm]	
LONG	126" [3200mm]	132" [3353mm]

DRAWING NOT TO SCALE

EQUIPMENT DETAIL
INJECTOR REMOTE CONTROL AND ELECTRONICS
B50–28
REV. DATE: 02.AUG.12

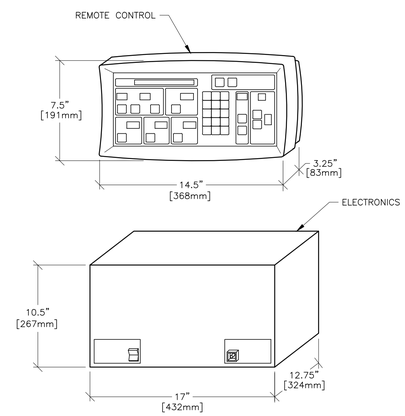

DRAWING NOT TO SCALE

EQUIPMENT DETAIL
MEDRAD PROVIS INJECTOR
B5031W
REV. DATE: 06/02/03

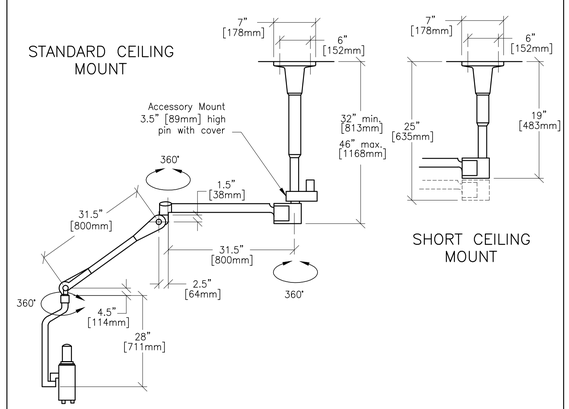

DETAIL NOT TO SCALE

EQUIPMENT DETAIL
MEDRAD PROVIS INJECTOR
B5031X
REV. DATE: 06/02/03

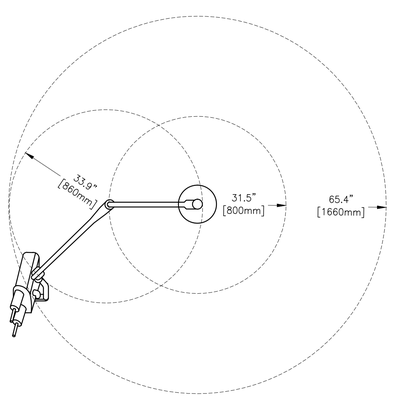

DETAIL NOT TO SCALE

EQUIPMENT DETAIL
INJECTOR ON MOBILE PEDESTAL
B50–30
REV. DATE: 28.JUN.12

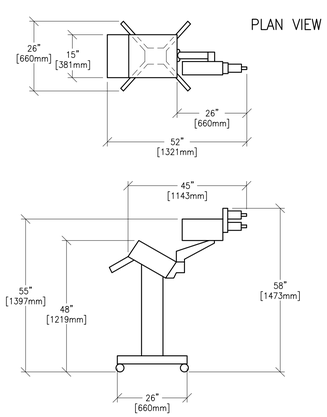

DRAWING NOT TO SCALE

EQUIPMENT DETAIL
ENVISION INJECTOR ELECTRONICS
B80–07
REV. 00: 12/3/97

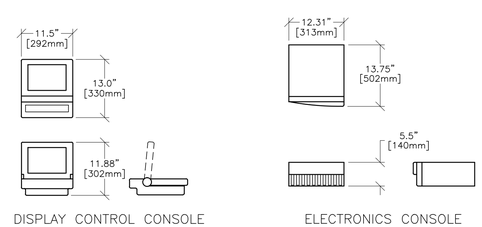

DRAWING NOT TO SCALE

EQUIPMENT DETAIL
LF 9000 INJECTOR
B50–29C
REV. 00: 08/08/97

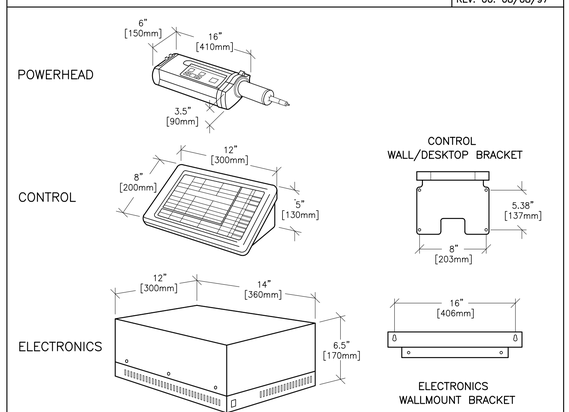

DETAIL NOT TO SCALE

THIS SHEET IS PART OF THE DOCUMENT SET LISTED ON SHEET C1 AND SHOULD NOT BE SEPARATED

GE Healthcare
IS Services Design Center
Milwaukee, Wisconsin

SHEET TITLE: EQUIPMENT DETAILS
MODALITY TYPE: INJECTORS CT & PET

THIS PLAN IS SUBMITTED TO SUGGEST LOCATION OF GE HEALTHCARE EQUIPMENT AND ASSOCIATED ANCILLARY EQUIPMENT. THIS PLAN IS BASED ON INFORMATION PROVIDED BY OTHERS. IN PREPARING THIS PLAN, EVERY EFFORT HAS BEEN MADE TO CONFORM DETAILS TO ACTUAL EQUIPMENT EXPECTED TO BE INSTALLED. IT IS NOT TO BE USED FOR CONSTRUCTION PURPOSES UNLESS VERIFIED. THE COMPANY CANNOT ACCEPT RESPONSIBILITY FOR ANY DAMAGES RESULTING THEREFROM.

PROJECT TITLE: INJECTOR TYPICAL FINAL
CEILING & PEDESTAL MOUNT

PROJECT	REVISION
TYPINJ	03

DATE: 01.Jul.15
DRAWN BY: DJP
CHECKED BY: TMS

REVISION HISTORY:

SHEET
D1

EQUIPMENT DETAIL
INJECTOR ON OVERHEAD COUNTERPOISED SUSPENSION

B50–31U
REV. DATE: 08/03/98

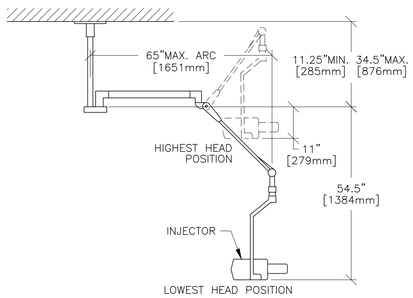

DRAWING NOT TO SCALE

EQUIPMENT DETAIL
EMPOWER INJECTOR POWER SUPPLY

B8009B
REV. DATE: 12/18/02

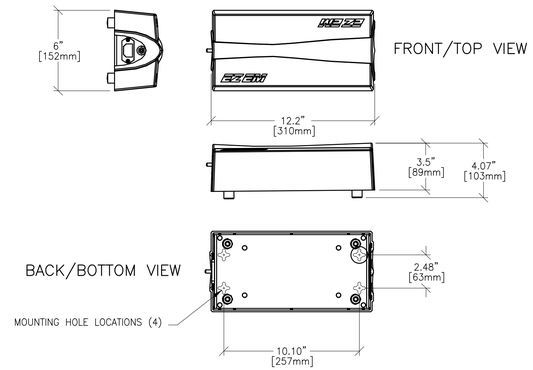

DETAIL NOT TO SCALE

EQUIPMENT DETAIL
EMPOWER INJECTOR REMOTE CONTROL (DESKTOP)

B8009C
REV. DATE: 12/18/02

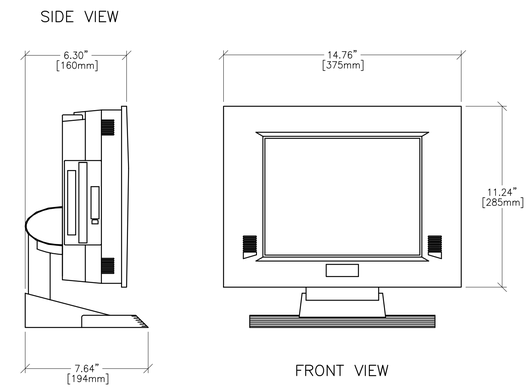

DETAIL NOT TO SCALE

EQUIPMENT DETAIL
EMPOWER INJECTOR ON PEDESTAL

B8009A
REV. DATE: 12/18/02

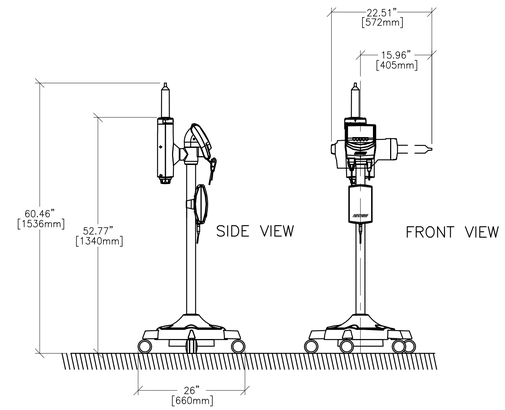

DETAIL NOT TO SCALE

EQUIPMENT DETAIL
EMPOWER CT INJECTOR ON CEILING MOUNT

B8009
REV. DATE: 12/18/02

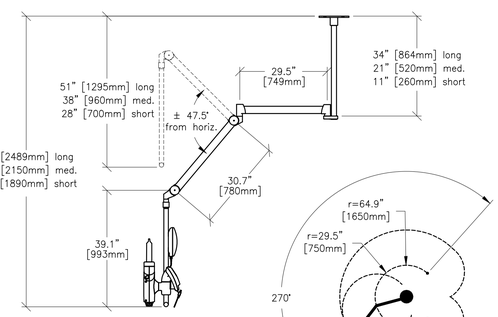

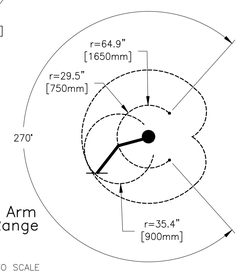

DETAIL NOT TO SCALE

GE Healthcare
IS Services Design Center
Milwaukee, Wisconsin

SHEET TITLE: EQUIPMENT DETAILS
MODALITY TYPE: INJECTORS CT & PET

THIS PLAN IS SUBMITTED TO SUGGEST LOCATION OF GE HEALTHCARE EQUIPMENT AND ASSOCIATED PANELS, DUCTWORK, PIPING, AND ELECTRICAL WIRING, AND DETAILS. IN PREPARING THIS PLAN, EVERY EFFORT HAS BEEN MADE TO CONFORM DETAILS TO ACTUAL EQUIPMENT EXPECTED TO BE INSTALLED. IT IS NOT TO BE USED FOR ACTUAL CONSTRUCTION PURPOSES UNLESS VERIFIED. THE COMPANY CANNOT ACCEPT RESPONSIBILITY FOR ANY DAMAGES RESULTING THEREFROM.

PROJECT TITLE:
INJECTOR
TYPICAL FINAL
CEILING & PEDESTAL MOUNT

PROJECT	REVISION
TYPINJ	03

DATE: 01.Jul.15
DRAWN BY: DJP
CHECKED BY: TMS

REVISION HISTORY:

SHEET
D2